1. DESCRIPTION

The XL/XD33039 are a high performance closed−loop speed control adapter. Usually used with XL33035 (a brushless DC motor controller), can build up a full closed−loop speed control system without need for magnetic or optical tachometer.

It contains three input buffers each with hysteresis for noise immunity, three digital edge detectors, a programmable monostable, and an internal shunt regulator. Also included is an inverter output for use in systems that require conversion of sensor phasing. At each positive or negative transition of the Hall effect sensors, the XL/XD33039 generates a pulse with a fixed on time. The output signal can then be filtered to obtain a voltage proportional to motor speed.

2. FEATURES

- Low cost and few external components required
- Operation Down to 5.5 V for Direct Powering from XL33035 Reference
- TTL Compatible Inputs With Hysteresis
- Digital Detection of Each Input Transition for Improved Low Speed Motor Operation
- Internal Shunt Regulator Allows Operation from a Non−Regulated Voltage Source
- Inverter Output for between (60/ 300)° and (120/ 240)° Sensor Phasing Conventions
- Two Packages are Available: DIP8 (XD33039) and SOP8 (XL33039)

3. PIN CONFIGURATIONS AND FUNCTIONS

XL33039
XD33039

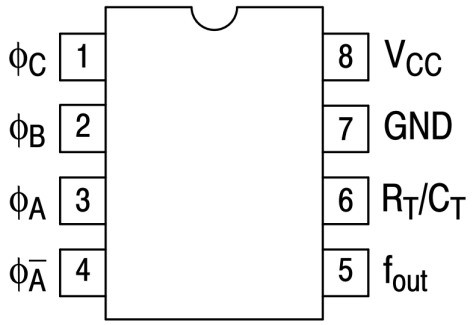

(Top View)

Pin Functions:

Pin	SYMBOL	Description
1	ϕ C	Pulse signal input for channel C
2	ϕ B	Pulse signal input for channel B
3	ϕ A	Pulse signal input for channel A
4	ϕ Ā	The inverter output of channel A
5	f_{out}	Pulse signal output
6	RT/CT	Programmable width determined by the values selected for RT and C
7	GND	Ground supply
8	V_{CC}	Supply voltage pin, .5.5V ~ 9.3V input

4. FUNCTIONAL BLOCK DIAGRAM

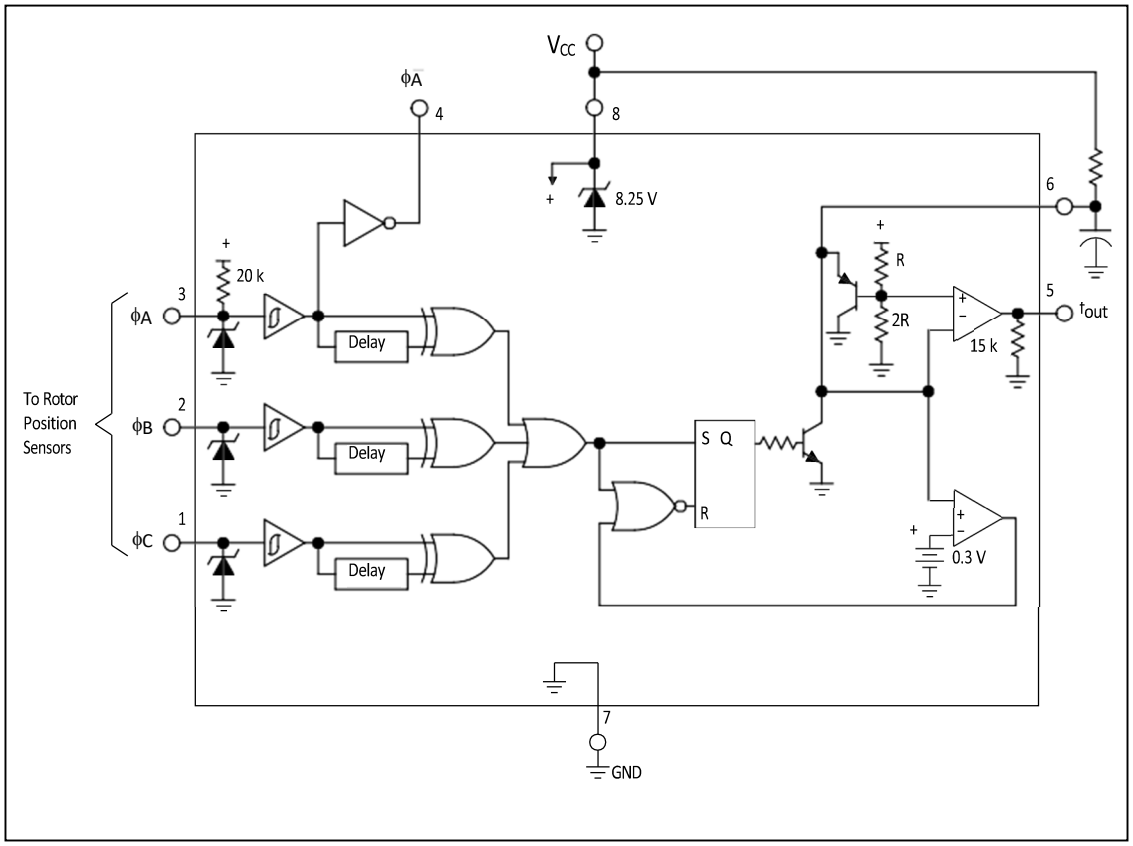

Block Diagram

5. SPECIFICATIONS

5.1. Absolute Maximum Ratings

Rating	Symbol	Value	Unit
V_{CC} Zener Current	$I_{Z(V_{CC})}$	30	mA
Logic Input Current (Pins 1, 2, 3)	I_{IH}	5.0	mA
Output Current (Pins 4, 5), Sink or Source	I_{DRV}	20	mA
Power Dissipation and Thermal Characteristics Maximum Power Dissipation @ T_A = + 85°C Thermal Resistance, Junction−to−Air	P_D $R_{\theta JA}$	 600 110	 mW °C/W
Operating Junction Temperature	T_J	+150	°C
Operating Ambient Temperature Range XL/XD33039	T_A	−40 to +85	°C
Storage Temperature Range	T_{stg}	−50 to +150	°C

Note: stresses exceeding maximum Ratings may damage the device. Functional operation above the Recommended Operating Conditions is not implied. Extended exposure to stresses above the Recommended Operating Conditions may affect device reliability.

5.2. Electrical Characteristics

(VCC = 6.25 V, R_T = 10 k, C_T = 22 nF, T_A = 25°C, unless otherwise noted)

Characteristic	Symbol	Min	Typ	Max	Unit
LOGIC INPUTS					
Input Threshold Voltage High State Low State	V_{IH} V_{IL}	2.4 –	– –	– 1.0	V
Input Current High State (V_{IH} = 5.0 V) ϕA ϕB, ϕC Low State (V_{IL} = 0 V) ϕA ϕB, ϕC	I_{IH} – – I_{IL} – –	 – 55 – 0.4 – 330 – 0.4	 – 90 – 5.5 – 410 – 5.5	µA	
MONOSTABLE AND OUTPUT SECTIONS					
Output Voltage High State f_{out} (I_{source} = 5.0 mA) ϕA (I_{source} = 2.0 mA) Low State f_{out} (I_{sink} = 10 mA) ϕA (I_{sink} = 10 mA)	V_{OH} 3.56 4.05 V_{OL} – –	 4.18 4.80 0.20 0.22	 4.50 – 0.70 0.70	V	
Output Pulse Width (Pin 5)	t_{PW}	–	230	265	µs
POWER SUPPLY SECTION					
Power Supply Operating Voltage Range XL/XD33039 (T_A = −40° to +85°C)	V_{CC}	5.5	–	V_Z	V
Power Supply Current	I_{CC}	----	4.2	5.0	mA
Zener Voltage (I_Z = 10 mA)	V_Z	7.5	8.3	9.0	V

6. OPERATING DESCRIPTION

The XL/XD33039 provides an economical method of implementing closed−loop speed control of brushless DC motors by eliminating the need for a magnetic or optical tachometer. Shown in the timing diagram of **Figure 1**, the three inputs (Pins 1, 2, 3) monitor the brushless motor rotor position sensors. Each sensor signal transition is digitally detected, OR'ed at the Latch 'Set' Input, and causes CT to discharge. A corresponding output pulse is generated at fout(Pin 5) of a defined amplitude, and programmable width determined by the values selected for RT and CT (Pin 6). The average voltage of the output pulse train increases with motor speed. When fed through a low pass filter or integrator, a DC voltage proportional to speed is generated. **Figure 2** shows the proper connections for a typical closed loop application using the XL33035 brushless motor controller. Constant speed operation down to 100 RPM is possible with economical three phase four pole motors.

The ΦA inverter output (Pin 4) is used in systems where the controller and motor sensor phasing conventions are not compatible. A method of converting from either convention to the other is shown as following:

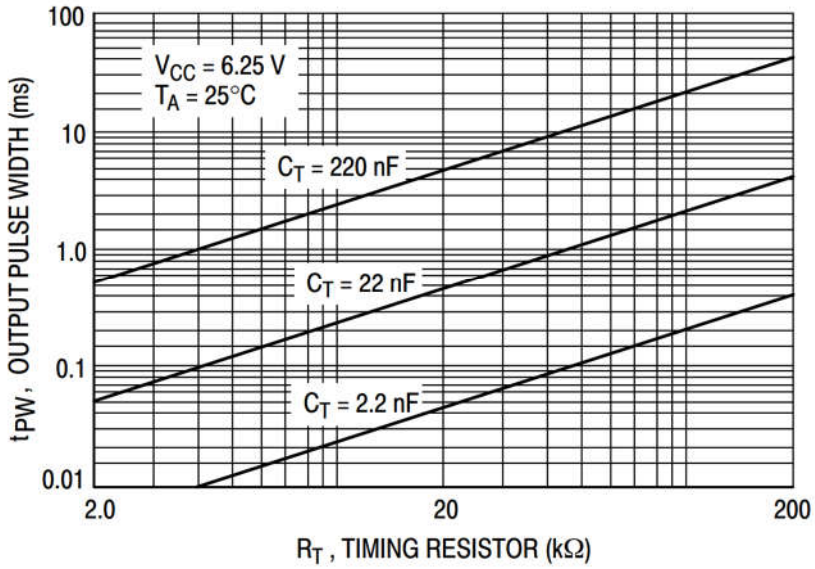

The output pulse amplitude VOH is constant with temperature and controlled by the supply voltage on VCC (Pin 8). Operation down to 5.5 V is guaranteed over temperature. For systems without a regulated power supply, an internal 8.25 V shunt regulator is provided.

Figure 1: timing diagram for XL/XD33039

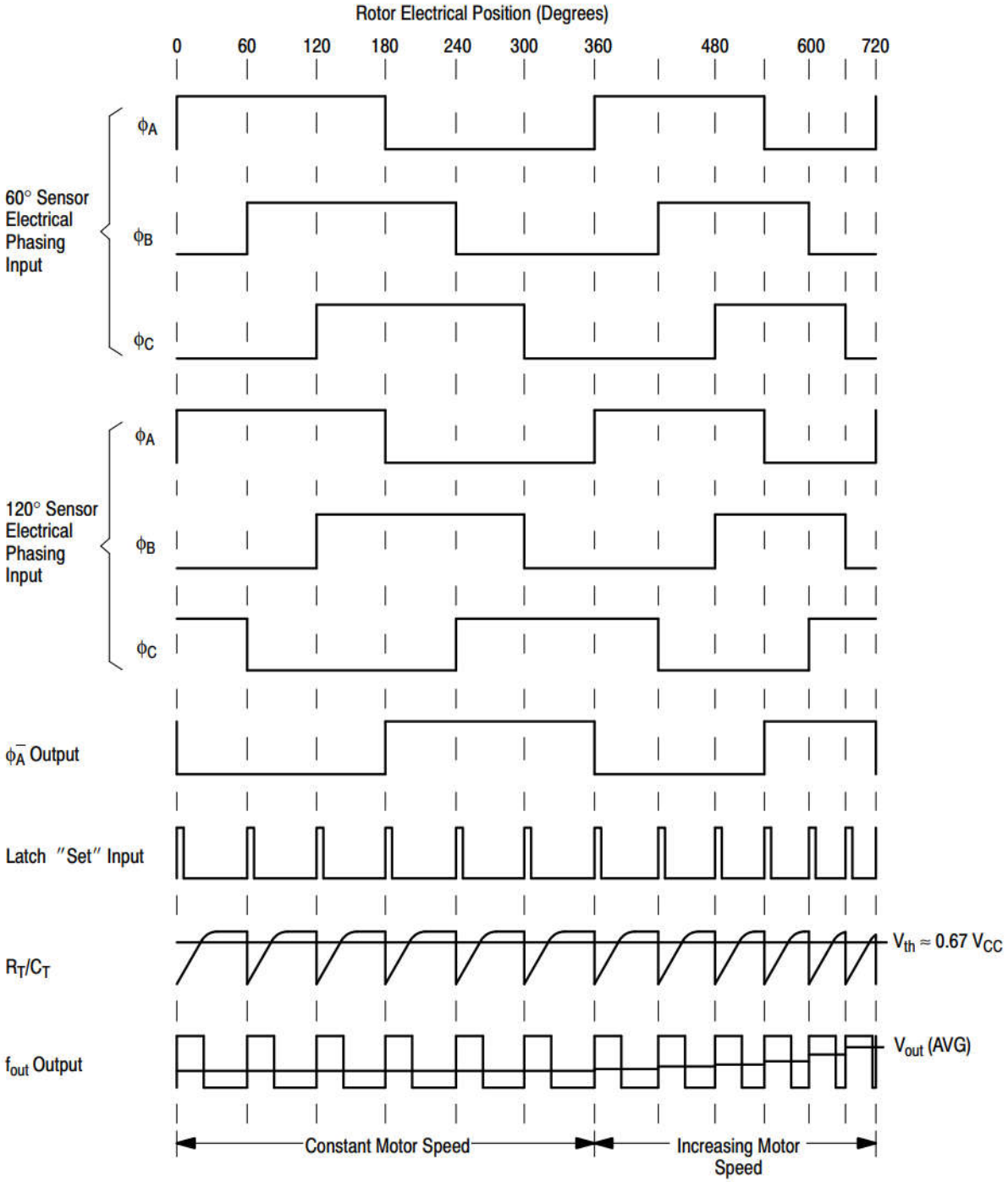

Figure 2. Closed Loop Speed Control Application Example

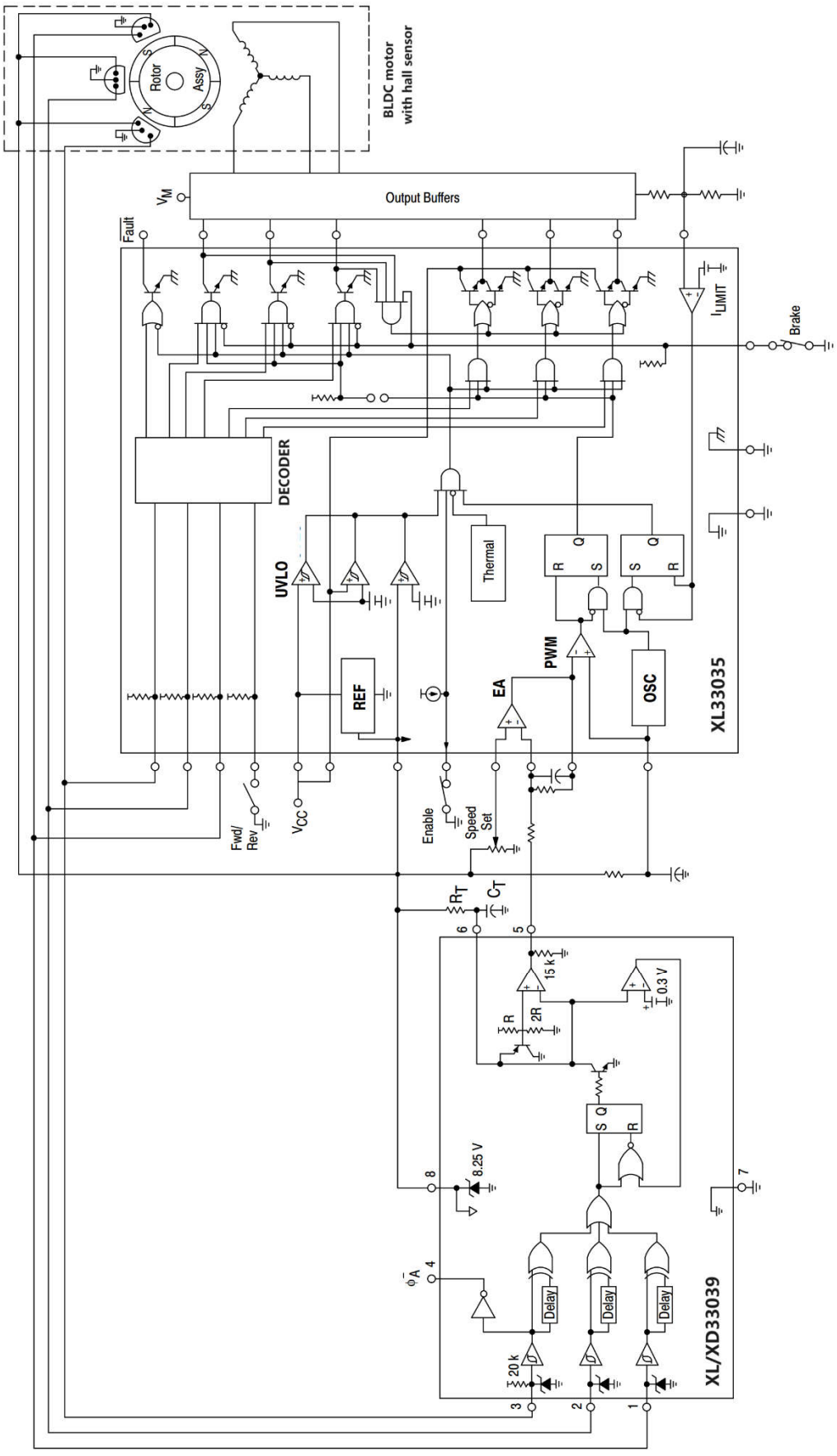

7. ORDERING INFORMATION

Ordering Information

Part Number	Device Marking	Package Type	Body size (mm)	Temperature (°C)	MSL	Transport Media	Package Quantity
XL33039	XL33039	SOP8	4.90 * 3.90	-40 to +85	MSL3	T&R	2500
XD33039	XD33039	DIP8	9.25 * 6.38	-40 to +85	MSL3	Tube 50	2000

8. DIMENSIONAL DRAWINGS

SOP8

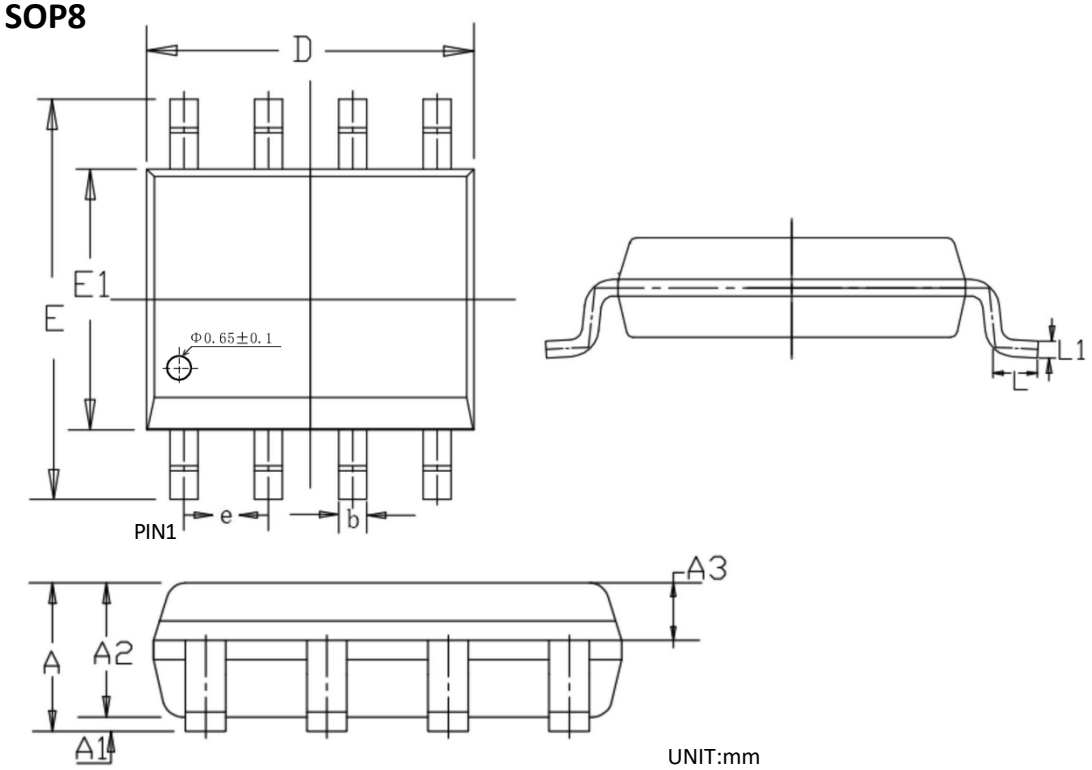

UNIT:mm

	MIN	NOM	MAX
A	1.450	1.550	1.650
A1	0.100	0.150	0.200
A2	1.300	1.400	1.500
A3	0.600	0.650	0.700
b	0.380	–	0.510
e	1.240	1.270	1.300
D(长度)	4.800	4.900	5.000
D	5.800	6.000	6.200
E	3.800	3.900	4.000
E1	0.450	0.600	0.750
L	—	0.25BSC	—

DIP8

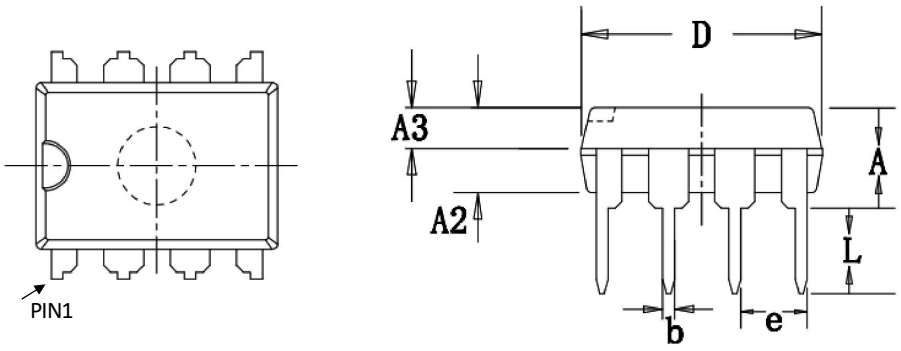

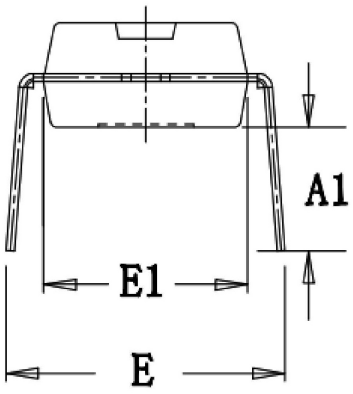

UNIT:mm

	MIN	NOM	MAX
A	3.600	3.800	4.000
A1	3.786	3.886	3.986
A2	3.200	3.300	3.400
A3	1.550	1.600	1.650
b	0.440	–	0.490
e	2.510	2.540	2.570
D	9.150	9.250	9.350
E	7.800	8.500	9.200
E1	6.280	6.380	6.480
L	3.000	–	–

[if you need help contact customer service staff Xinluda reserves the right to change the above information without prior notice]