1. DESCRIPTION

The 293/393/2903 is a dual comparator with the ability to operate up to 36 V. This standard device has proven ubiquity and versatility across a wide range of applications. This is due to very wide supply voltages range (2 V to 36 V), low Icc and fast response of the devices. The open-drain output allows the user to configure the output's logic low voltage (V_{OL}) and can be used to enable the comparator to be used in AND functionality.

The 293/393/2903 consists of a PNP darlington pair input, allowing the device to operate with very high gain and fast response with minimal input bias current. The input Darlington pair creates a limit on the input common mode voltage capability, allowing the 293/393/2903 to accurately function from ground to VCC-1.5V differential input. This is enables much head room for modern day supplies of 3.3V and 5V.

The output consists of an open drain NPN (pull-down or low side) transistor. The output NPN will sink current when the positive input voltage is higher than the negative input voltage and the offset voltage. The V_{OL} is resistive and will scale with the output current.

2. FEATURES

- Single-Supply (36V) or Dual Supplies (±18V)
- Low Supply-Current Drain Independent of Supply Voltage: 0.4 mA (Typical) Per Comparator
- Faster response time of 2.1μsec(Typical)
- Low Input Bias Current: 7 nA (Typical)
- Low Input Offset Voltage: 3 mV (Typical)
- Common-Mode Input Voltage Range Includes Ground
- Differential Input Voltage Range Equal to Maximum-Rated Supply Voltage: ±36 V
- Low Output Saturation Voltage
- Output Compatible With TTL, MOS, and CMOS

3. APPLICATIONS

- Factory automation & control
- Motor drives
- Building automation
- Infotainment & cluster
- Vacuum robot
- Single phase UPS

4. PIN CONFIGURATIONS AND FUNCTIONS

293, 393, 2903

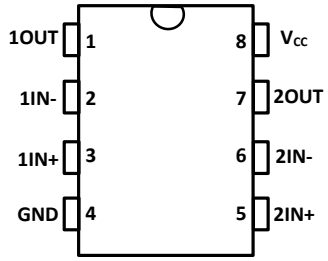

(TOP VIEW)

Pin Functions

PINS		I/O	DESCRIPTION
NAME	SOP8, VSSOP8 TSSOP8, DIP8		
10UT	1	Output	Output pin of comparator 1
1IN-	2	Input	Negative input pin of comparator 1
1IN+	3	Input	Positive input pin of comparator 1
GND	4	Input	Ground
2IN+	5	Input	Positive input pin of comparator 2
2IN-	6	Input	Negative input pin of comparator 2
20UT	7	Output	Output pin of comparator 2
Vcc	8	Input	Supply Pin

5. FUNCTIONAL BLOCK DIAGRAM

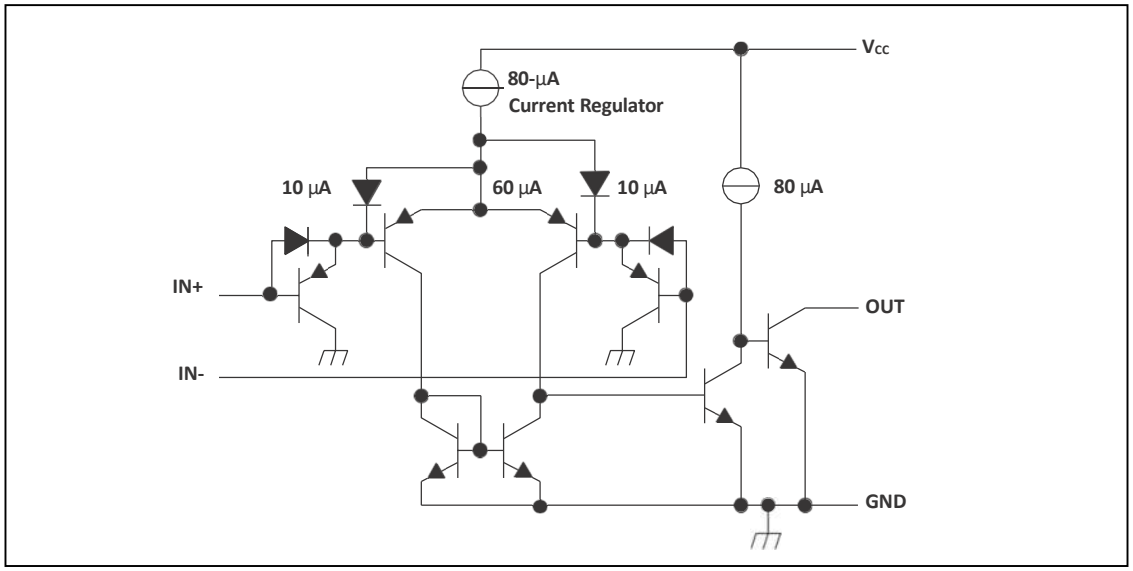

Block diagram(1/2 of Circuit shown)

6. SPECIFICATIONS

6.1. Absolute Maximum Ratings

Over operating free-air temperature range (unless otherwise noted)(1)

SYMBOL	PARAMETER	MIN	MAX	UNIT
VCC	Supply voltage range(2)	-0.3	36	V
VID	Differential input voltage(3)	-36V	36	V
VIN	Input pin voltage range	-0.3	36	V
VO	Output pin voltage range	-0.3	36	V
I_O	Output current		18	mA
	Duration of output short circuit to ground	Unlimited		
T_j	Operating virtual-junction temperature		150	℃
Tstg	Storage temperature range	-50	+150	℃

[1] Stresses beyond those listed under Absolute Maximum Ratings may cause permanent damage to the device. These are stress ratings only, and functional operation of the device at these or any other conditions beyond those indicated under Recommended Operating Conditions is not implied. Exposure to absolute-maximum-rated conditions for extended periods may affect device reliability.

[2] All voltage values, except differential voltages, are with respect to network ground.

[3] Differential voltages are at IN+ with respect to IN-.

[4] Short circuits from outputs to Vcc can cause excessive heating and eventual destruction.

6.2. Thermal Resistance Characteristics (Typical Value)

THERMAL METRIC		293, 393,2903		UNIT
		SOP8	DIP8	
		8 PINS	8 PINS	
RSJA	Junction-to-ambient thermal resistance	145	85	°c/w
Rejc(top)	Junction-to-case (top) thermal resistance	93	75	°c/w

THERMAL METRIC)		293, 393,2903		UNIT
		VSSOP8	TSSOP8	
		8 PINS	8 PINS	
RSJA	Junction-to-ambient thermal resistance	210	205	°c/w
Rejc(top)	Junction-to-case (top) thermal resistance	102	89	°c/w

6.3. ESD Ratings

SYMBOL	PARAMETER	TEST CONDITIONS	MIN	MAX	UNIT
VESD	Electrostatic Discharge	Human Body Mode (HBM), per ANSI/ESDA/JEDEC JS-001	0	1000	V
		Charged Device Model (CDM), per JEDEC specification JESD22-C101	0	500	V

[1] JEDEC document JEP155 states that 500-V HBM allows safe manufacturing with a standard ESD control process.

[2] JEDEC document JEP157 states that 250-V CDM allows safe manufacturing with a standard ESD control process.

6.4. Recommended Operating Conditions

Over operating free-air temperature range (unless otherwise noted)

	MIN	MAX	UNIT
Supply voltage range(（Vs = VCC -GND）	2	30	V
Input pin voltage range	0	VCC-2	V
Ambient temperature, TA (293)	-25	85	°C
Ambient temperature, TA (393)	0	70	°C
Ambient temperature, TA (2903)	-40	125	°C

6.5. Electrical Characteristics

At specified free-air temperature, Vcc = 5 V (unless otherwise noted)

PARAMETER		TEST CONDITIONS		TA[1]	293, 393			UNIT
					MIN	TYP	MAX	
V_{IO}	Input offset voltage	Vcc = 5 V to 30 V, Vic = $V_{ICR\ min}$, V_o = 1.4 V		25°C		3	8	mV
				Full range			10	
I_{IO}	Input offset current	V_o = 1.4 V		25°C		7	100	nA
				Full range			300	
I_{IB}	Input bias current	V_o = 1.4V		25°C		-30	-300	nA
				Full range			-500	
V_{ICR}	Common-mode input-voltage range®	(Note [2])		25°C	0 to V_{cc} -1.5			V
				Full range	0 to Vcc -2			
A_{VD}	Large-signal differential-voltage amplification	V_{CC} = 15 V, V_o = 1.4 V to 11.4V R_L ≥ 15 kΩ to Vcc		25°C	50	200		V/mV
I_{OH}	High-level output current	V_{OH} = 5 V	V_{ID} = 1 V	25°C		0.3	90	nA
		V_{0H} = 30 V	V_{ID} = 1 V	Full range			2	uA
V_{OL}	Low-level output voltage	I_{OL} = 4 mA,	V_{ID} = -1 V	25°C		150	450	mV
				Full range			750	
I_{OL}	Low-level output current	V_{0L} = 1.5 V,	V_{ID} = -1 V	25°C	3			mA
Icc	Supply current	R_L = ∞	Vcc = 5 V	25°C		0.8	2	mA
			V_{cc} = 30 V	Full range			5	

[1] Full range (minimum or maximum) for 293 is -25°C to 85°C, and for 393 is 0°C to 70°C. All characteristics are measured with zero common-mode input voltage, unless otherwise specified.

[2] The voltage at either input should not be allowed to go negative by more than 0.3 V otherwise output may be incorrect and excessive input current can flow. The upper end of the common-mode voltage range is limited by VCC – 2V. However only one input needs to be in the valid common mode range, the other input can go up the maximum VCC level and the comparator provides a proper output state. Either or both inputs can go to maximum VCC level without damage.

6.6. Electrical Characteristics

At specified free-air temperature, Vcc = 5 V (unless otherwise noted)

PARAMETER		TEST CONDITIONS		T_A[1]	2903			UNIT
					MIN	TYP	MAX	
V_{ID}	Input offset voltage	Vcc = 5 V to MAX[2], Vic = $V_{ICR\ min}$, V_o = 1.4 V		25°C		6	15	mV
				Full range			20	
I_{IO}	Input offset current	V_o = 1.4 V		25°C		18	130	nA
				Full range			360	
I_{IB}	Input bias current	V_o = 1.4V		25°C		-45	-400	nA
				Full range			-600	
V_{ICR}	Common-mode input-voltage range®			25°C	0 to V_{cc} -1.5			V
				Full range	0 to Vcc -2			
A_{VD}	Large-signal differential-voltage amplification	Vcc = 15 V, V_o = 1.4 V to 11.4V, R_L ≥ 15 kΩ to Vcc		25°C	50	200		V/mV
I_{OH}	High-level output current	V_{OH} = 5 V	V_{ID} = 1 V	25°C		0.7	120	nA
		V_{0H} =VccMAX[2]	V_{ID} = 1 V	Full range			5	uA
V_{OL}	Low-level output voltage	I_{OL} = 4 mA,	V_{ID} = -1 V	25°C		200	500	mV
				Full range			800	
I_{OL}	Low-level output current	V_{0L} = 1.5 V,	V_{ID} = -1 V	25°C	3			mA
Icc	Supply current	R_L = ∞	Vcc = 5 V	25°C		1.1	3	mA
			V_{cc} = MAX	Full range			8	

[1] Full range (minimum or maximum) for 2903 is -40°C to 125°C. All characteristics are measured with zero common-mode input voltage, unless otherwise specified.

[2] VccMAX = 30V

[3] The voltage at either input should not be allowed to go negative by more than 0.3 V otherwise output may be incorrect and excessive input current can flow. The upper end of the common-mode voltage range is limited by VCC – 2V. However only one input needs to be in the valid common mode range, the other input can go up the maximum VCC level and the comparator provides a proper output state. Either or both inputs can go to maximum VCC level without damage.

6.7. Switching Characteristics

Vcc = 5 V, TA = 25°C

PARAMETER	TEST CONDITIONS		293, 393, 2903	UNIT
			TYP	
Response time	Ri connected to 5 V through 5.1 kΩ. C_L= 15pF[1][2]	100-mV input step with 5-mV	2.1	µs
		TTL-level input step	0.8	

[1] C_L includes probe and jig capacitance.

[2] The response time specified is the interval between the input step function and the instant when the output crosses 1.4 V.

7. APPLICATION CIRCUIT EXAMPLE

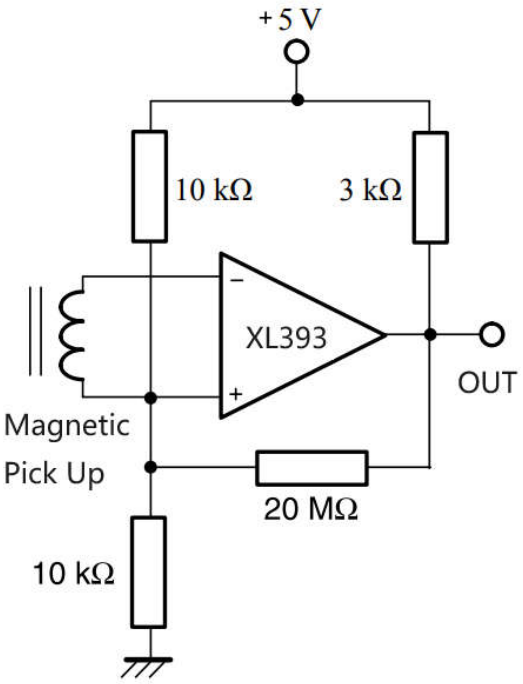

(Transducer amplifier)

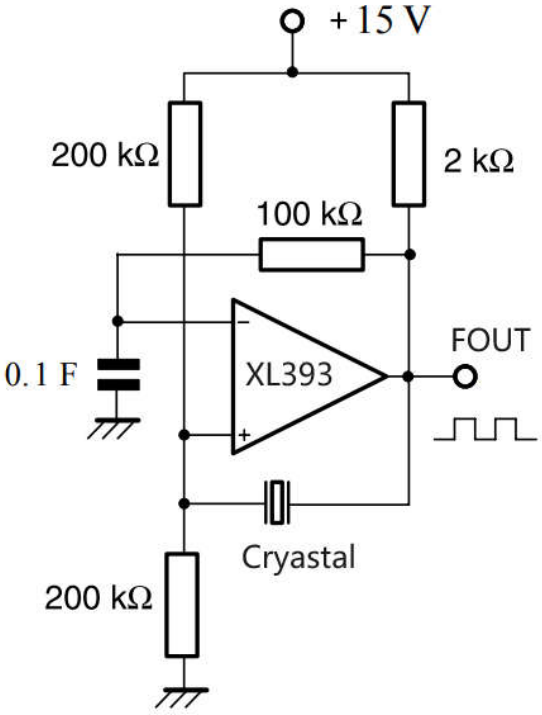

(Frequency generator)

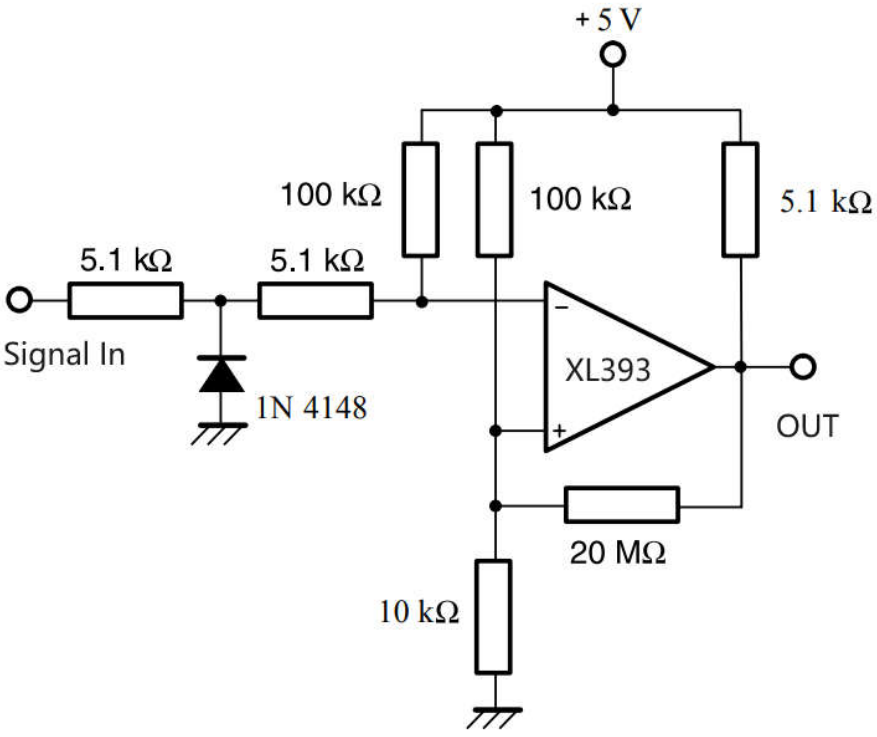

(Zero crossing detector)

8. ORDERING INFORMATION

Ordering Information

Part Number	Device Marking	Package Type	Body size (mm)	Temperature (°C)	MSL	Transport Media	Package Quantity
XL293D-8	XL293D-8	SOP8	4.90 * 3.90	-25 to +85	MSL3	T&R	2500
XD293-KR	XD293-KR	VSSOP8	3.00 * 4.90	-25 to +85	MSL3	T&R	2500
XL293-TS	XL293-TS	TSSOP8	3.00 * 4.40	-25 to +85	MSL3	T&R	2500
XD293-8	XD293-8	DIP8	9.25 * 6.38	-25 to +85	MSL3	Tube 50	2000
XL393	XL393	SOP8	4.90 * 3.90	0 to +70	MSL3	T&R	2500
XL393-KR	XL393-KR	VSSOP8	3.00 * 4.90	0 to +70	MSL3	T&R	2500
XL393-TS	XL393-TS	TSSOP8	3.00 * 4.40	0 to +70	MSL3	T&R	2500
XD393	XD393	DIP8	9.25 * 6.38	0 to +70	MSL3	Tube 50	2000
XL2903	XL2903	SOP8	4.90 * 3.90	-40 to +125	MSL3	T&R	2500
XL2903-KR	XL2903-KR	VSSOP8	3.00 * 4.90	-40 to +125	MSL3	T&R	2500
XL2903-TS	XL2903-TS	TSSOP8	3.00 * 4.40	-40 to +125	MSL3	T&R	2500
XD2903	XD2903	DIP8	9.25 * 6.38	-40 to +125	MSL3	Tube 50	2000

9. DIMENSIONAL DRAWINGS

SOP8

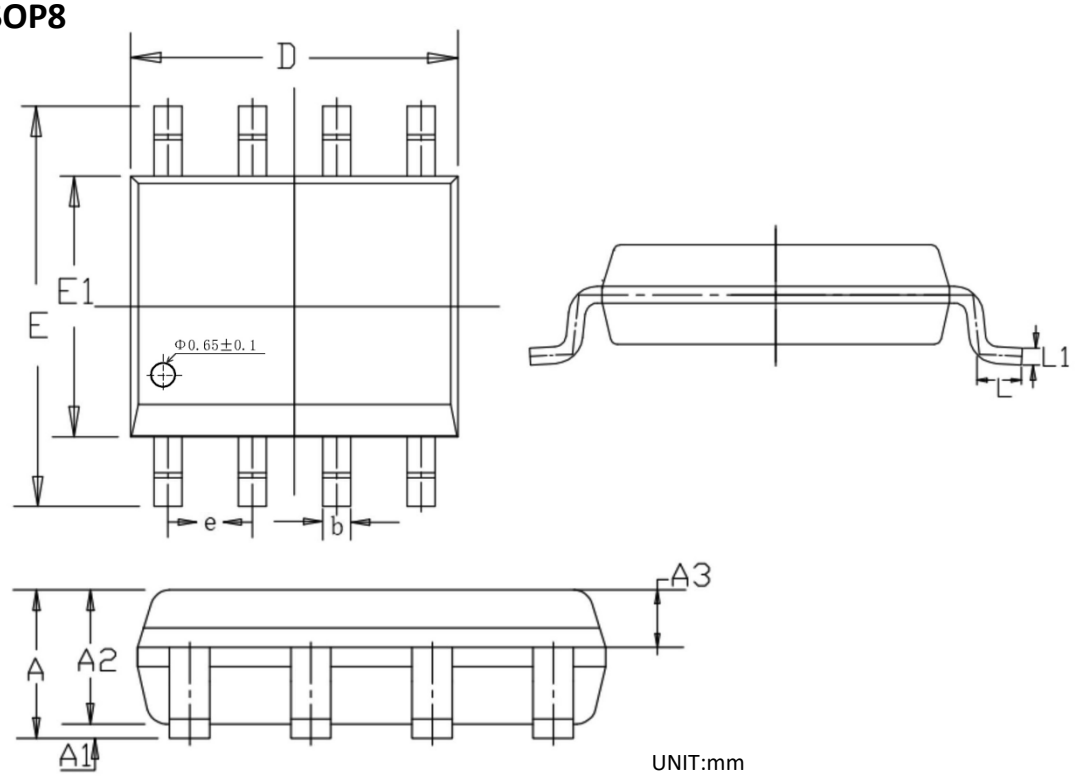

UNIT:mm

	MIN	NOM	MAX
A	1.450	1.550	1.650
A1	0.100	0.150	0.200
A2	1.300	1.400	1.500
A3	0.600	0.650	0.700
b	0.380	–	0.510
e	1.240	1.270	1.300
D	4.800	4.900	5.000
E	5.800	6.000	6.200
E1	3.800	3.900	4.000
L	0.450	0.600	0.750
L1	—	0.25BSC	—

DIP8

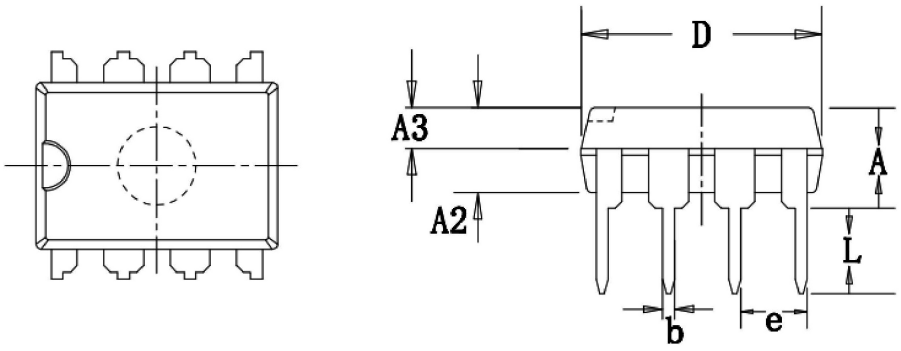

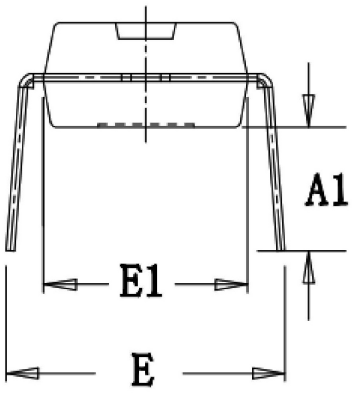

UNIT:mm

	MIN	NOM	MAX
A	3.600	3.800	4.000
A1	3.786	3.886	3.986
A2	3.200	3.300	3.400
A3	1.550	1.600	1.650
b	0.440	–	0.490
e	2.510	2.540	2.570
D	9.150	9.250	9.350
E	7.800	8.500	9.200
E1	6.280	6.380	6.480
L	3.000	–	–

TSSOP8

Size / Mark	MIN (mm)	NOM (mm)	MAX (mm)	Size / Mark	MIN (mm)	NOM (mm)	MAX (mm)
A	2.95	3.00	3.05	B4	0.50	0.60	0.70
A1		0.22		C	0.95	1.00	1.05
A2	0.63	0.65	0.68	C1	0.39	0.44	0.49
B	4.35	4.40	4.45	C2		0.127	
B1	6.30	6.40	6.50	C3	0.05	0.10	0.15
B2	0.90	1.00	1.10	R		12°	
B3			0.12				

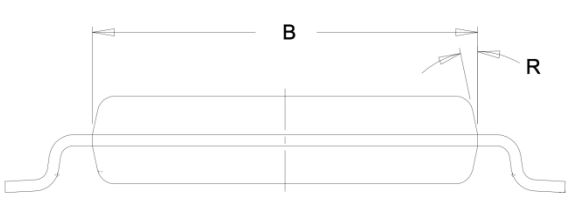

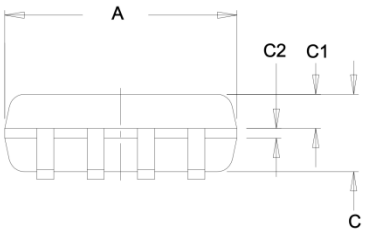

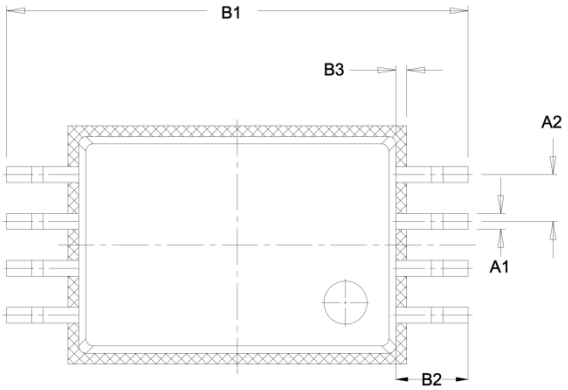

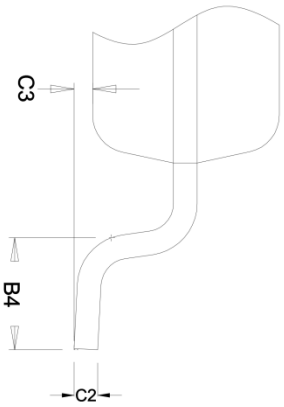

VSSOP8

TOP VIEW

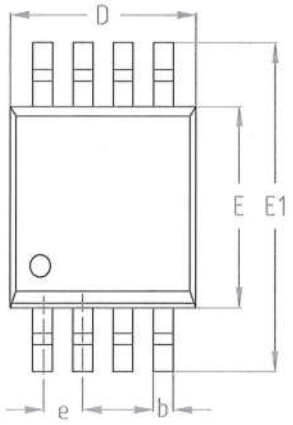

SIDE VIEW

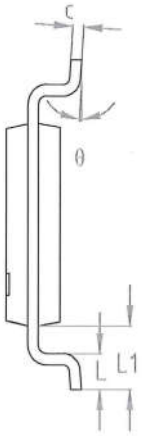

SIDE VIEW

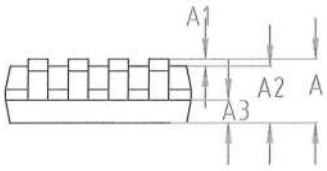

Dimensions, Unit:mm			
SYMBOL	MIN	NOM	MAX
A	–	–	1.10
A1	0.05	–	0.15
A2	0.75	0.85	0.95
A3	0.30	0.35	0.40
b	0.28	–	0.36
c	0.15	–	0.19
D	2.90	3.00	3.10
E	2.90	3.00	3.10
E1	4.70	4.90	5.10
e	0.65 BSC		
L1	0.95 REF		
L	0.40	–	0.70
θ	0°	–	8°

[if you need help contact us. Xinluda reserves the right to change the above information without prior notice]