Features

- Compatible with all I²C bidirectional data transfer protocol
- Memory array:
  - 32 Kbits (4Kbytes) of EEPROM
  - Page size: 32 bytes
  - Additional Write lockable page
- Single supply voltage and high speed:
  - 1.7V-5.5V
  - 1MHz

  Random and sequential Read modes
- Write:
  - Byte Write within 3 ms
  - Page Write within 3 ms
  - Partial Page Writes Allowed
- Write Protect Pin for Hardware Data Protection
- Schmitt Trigger, Filtered Inputs for Noise Suppression
- High-reliability
  - Endurance: 1 Million Write Cycles
  - Data Retention: 100 Years
- Enhanced ESD/Latch-up protection
  - HBM 8000V
- 8-lead PDIP/SOP/TSSOP/UDFN and WLCSP4 packages

Description

- The BL24CS32 provides 32768 bits of serial electrically erasable and programmable read-only memory (EEPROM), organized as 4096 byte.
- The device is optimized for use in many industrial and commercial applications where low-power and low-voltage operation are essential.
- The BL24CS32 offers an additional page, named the Identification Page (32 bytes). The Identification Page can be used to store sensitive application parameters which can be (later) permanently locked in Read-only mode.
- The BL24CS32 offers a read-only Pre-Program Unique Identification (UID) Page (8 bytes).

Pin Configuration

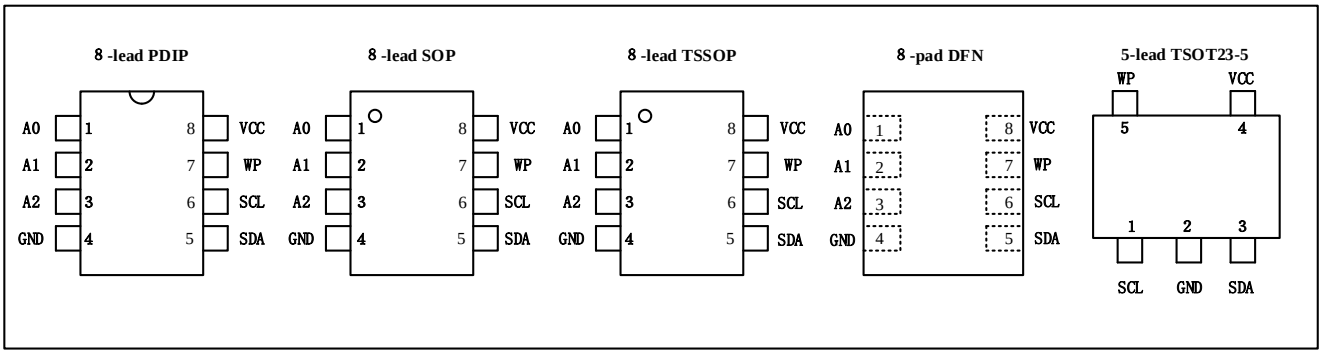

©2017 Belling All Rights Reserved www.belling.com.cn

Pin Descriptions

Pin Name	Type	Functions
A0-A2	I	Address Inputs
SDA	I/O	Serial Data
SCL	I	Serial Clock Input
WP	I	Write Protect
GND	P	Ground
Vcc	P	Power Supply

Table 1

Block Diagram

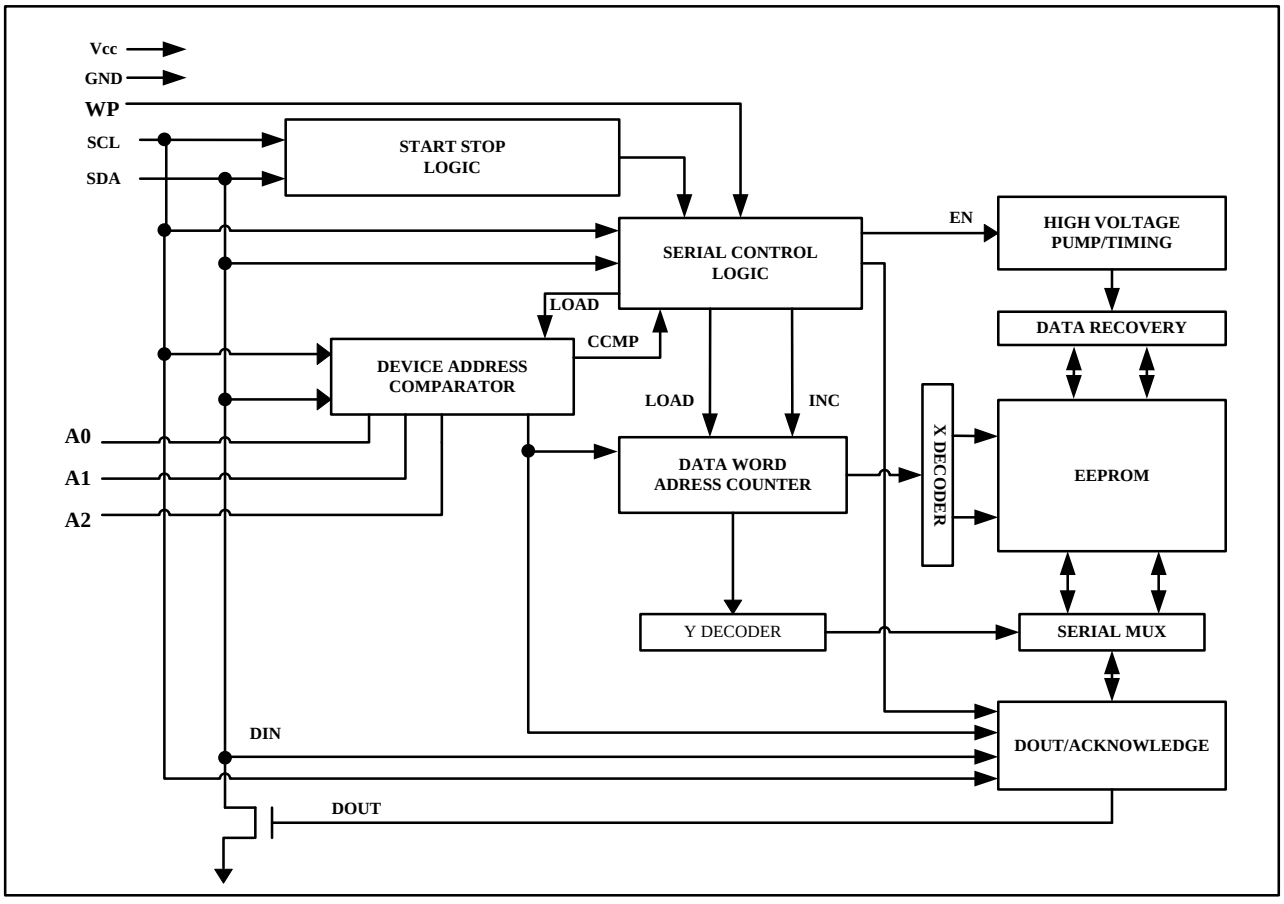

Figure 1

©2017 Belling All Rights Reserved www.belling.com.cn

DEVICE/PAGE ADDRESSES (A2, A1 and A0): The A2, A1 and A0 pins are device address inputs that are hard wire for the BL24CS32. Eight 32K devices may be addressed on a single bus system (device addressing is discussed in detail under the Device Addressing section).

SERIAL DATA (SDA): The SDA pin is bi-directional for serial data transfer. This pin is open-drain driven and may be wire-ORed with any number of other open-drain or open- collector devices.

SERIAL CLOCK (SCL): The SCL input is used to positive edge clock data into each EEPROM device and negative edge clock data out of each device.

WRITE PROTECT (WP): The BL24CS32 has a Write Protect pin that provides hardware data protection. The Write Protect pin allows normal read/write operations when connected to ground (GND). When the Write Protection pin is connected to V_{CC}, the write protection feature is enabled and operates as shown in the following **Table 2**.

WP Pin Status	BL24CS32
At VCC	Full(32K)Array
At GND	Normal Read/Write Operations

Table 2

Functional Description

1. Memory Organization

BL24CS32, 32K SERIAL EEPROM: Internally organized with 128 pages of 32 bytes each, the 32K requires a 12-bit data word address for random word addressing.

2. Device Operation

CLOCK and DATA TRANSITIONS: The SDA pin is normally pulled high with an external device. Data on the SDA pin can change only during SCL low time periods (see **Figure 2**). Data changes during SCL high periods will indicate a start or stop condition as defined below.

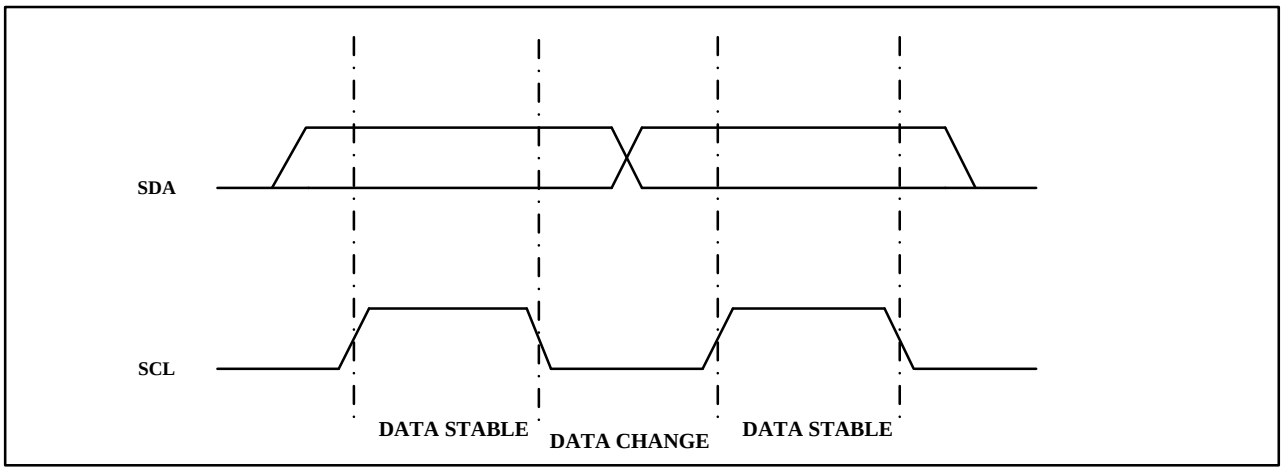

Figure 2. Data Validity

©2017 Belling All Rights Reserved www.belling.com.cn

START CONDITION: A high-to-low transition of SDA with SCL high is a start condition which must precede any other command (see **Figure 3**).

STOP CONDITION: A low-to-high transition of SDA with SCL high is a stop condition. (see **Figure 3**).

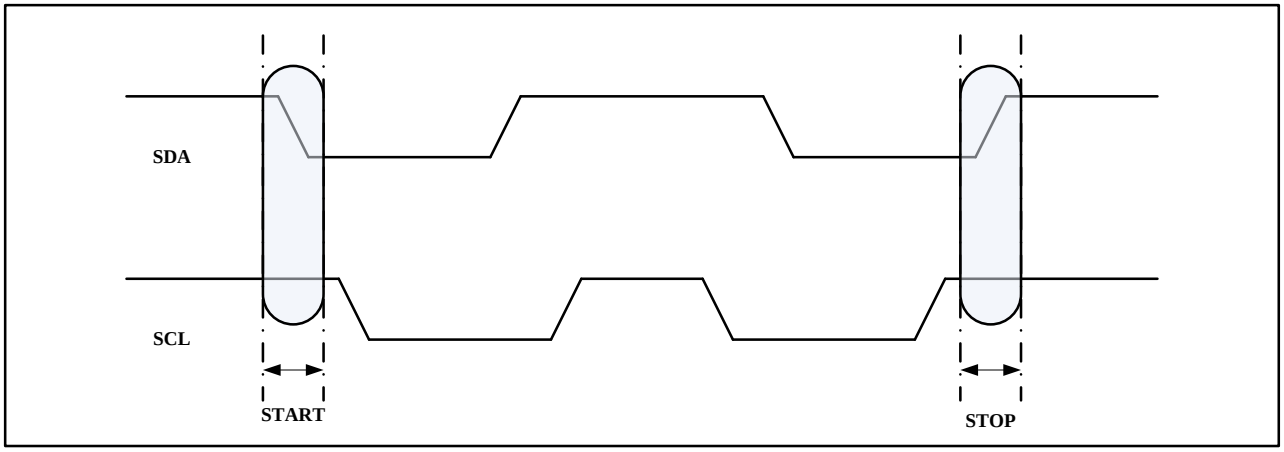

Figure 3. Start and Stop Definition

ACKNOWLEDGE: All addresses and data words are serially transmitted to and from the EEPROM in 8-bit words. The EEPROM sends a "0" to acknowledge that it has received each word. This happens during the ninth clock cycle.

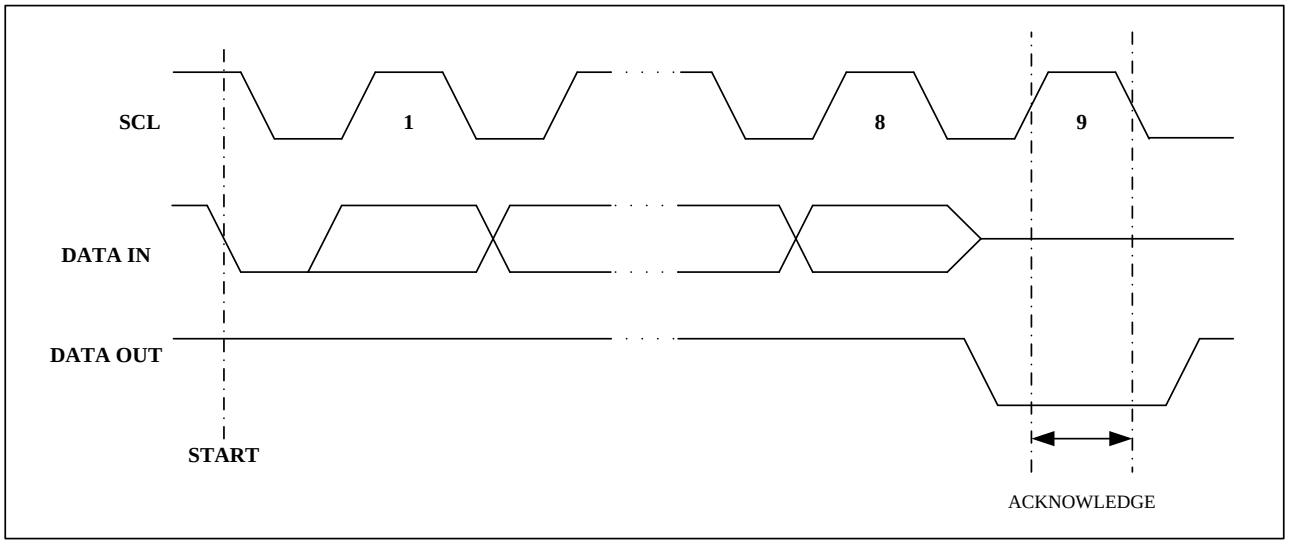

Figure 4. Output Acknowledge

STANDBY MODE: The BL24CS32 features a low-power standby mode which is enabled:

(a) upon power-up
(b) after the receipt of the STOP bit and the completion of any internal operations.

MEMORY RESET: After the protocol is interrupted, power loss or system reset, any two-wire part can be reset by following these steps:

1. Clock up to 9 cycles.
2. Look for SDA high in each cycle while SCL is high.
3. Create a start condition.

©2017 Belling All Rights Reserved www.belling.com.cn

3. Device Addressing

The 32K EEPROM devices all require an 8-bit device address word following a start condition to enable the chip for a read or write operation (see **Figure 5**)

MSB							LSB
1	0	1	0	A2	A1	A0	R/W

Figure 5. Device Address

The device address word consists of a mandatory "1", "0" sequence for the first four most significant bits as shown. This is common to all the Serial EEPROM devices.

The 32K EEPROM uses A2, A1 and A0 device address bits to allow as much as eight devices on the same bus. These 3 bits must be compared to their corresponding hardwired input pins. The A2, A1 and A0 pins use an internal proprietary circuit that biases them to a logic low condition if the pins are allowed to float.

The eighth bit of the device address is the read/write operation select bit. A read operation is initiated if this bit is high and a write operation is initiated if this bit is low.

Upon a compare of the device address, the EEPROM will output a "0". If a compare is not made, the chip will return to standby state.

DATA SECURITY: The BL24CS32 has a hardware data protection scheme that allows the user to write protect the entire memory when the WP pin is at VCC.

4. Write Operations

BYTE WRITE: A write operation requires two 8-bit data word address (see **Table 3 & Table 4**) following the device address word and acknowledgment. Upon receipt of every 8-bit address, the EEPROM will respond with a "0" and then send 8-bit data word. Following receipt of the 8-bit data word, the EEPROM will output a "0" and the master device, such as a microcontroller, must terminate the write sequence with a stop condition. At this time the EEPROM enters an internally timed write cycle, tWR, in order to save the data in the nonvolatile memory. All inputs are disabled during this write cycle and the EEPROM will not respond until the write is complete (see **Figure 6**).

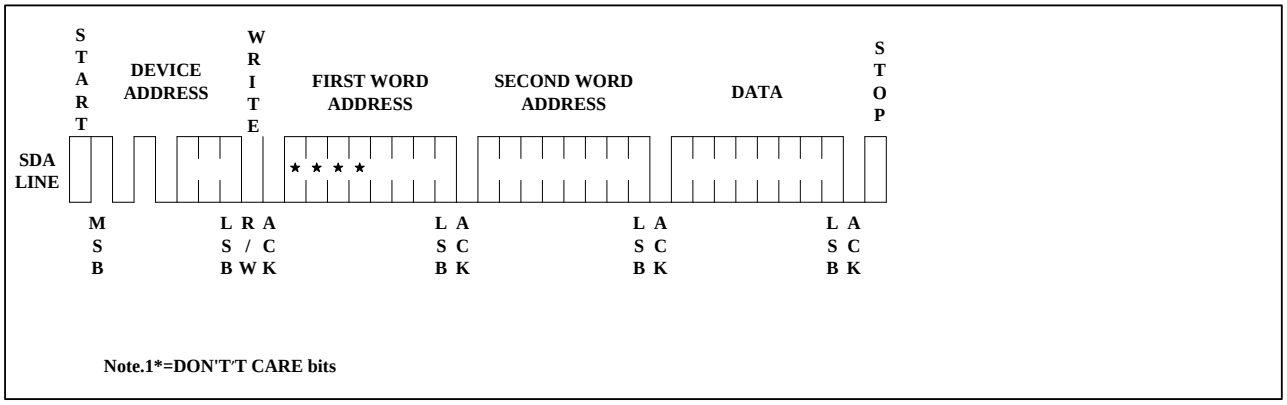

Figure 6. Byte Write

B15	B14	B13	B12	B11	B10	B9	B8

Table 3. FIRST WORD ADDRESS

B7	B6	B5	B4	B3	B2	B1	B0

Table 4. SECOND WORD ADDRESS

©2017 Belling All Rights Reserved www.belling.com.cn

PAGE WRITE: The Page Write mode allows up to 32 bytes to be written in a single Write cycle. A page write is initiated the same as a byte write, but the microcontroller does not send a stop condition after the first data word is clocked in. Instead, after the EEPROM acknowledges receipt of the first data word, the microcontroller can transmit up to 31 more data words. The EEPROM will respond with a “0” after each data word received. The microcontroller must terminate the page write sequence with a stop condition.

The data word address lower five bits are internally incremented following the receipt of each data word. The higher data word address bits are not incremented, retaining the memory page row location. When the word address, internally generated, reaches the page boundary, the following byte is placed at the beginning of the same page. If more than 32 data words are transmitted to the EEPROM, the data word address will "roll over" and previous data will be overwritten.

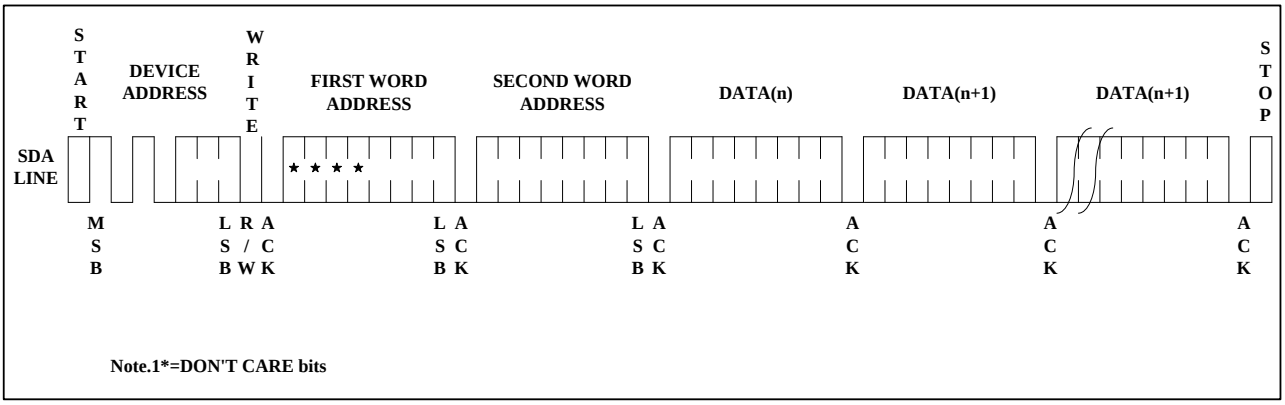

Figure 7. Page Write

WRITE IDENTIFICATION PAGE: The identification Page (32 bytes) is an additional page which can be written and (later) permanently locked in Read-only mode. It is written by issuing the Write Identification Page instruction. This instruction uses the same protocol and format as Page Write (into memory array), except for the following differences:

- Device type identifier = 1011b
- MSB address bits B15/B5 are don't care except for address bit B10 which must be "0".

LSB address bits B4/B0 define the byte address inside the Identification page.

If the Identification page is locked, the data bytes transferred during the Write Identification Page instruction are not acknowledged (NoAck).

ACKNOWLEDGE POLLING: Once the internally timed write cycle has started and the EEPROM inputs are disabled, acknowledge polling can be initiated. This involves sending a start condition followed by the device address word. The read/write bit is representative of the operation desired. Only if the internal write cycle has completed will the EEPROM respond with a "0", allowing the read or write sequence to continue.

©2017 Belling All Rights Reserved www.belling.com.cn

5. Read Operations

Read operations are initiated the same way as write operations with the exception that the read/write select bit in the device address word is set to "1". There are three read operations: current address read, random address read and sequential read.

CURRENT ADDRESS READ: The internal data word address counter maintains the last address accessed during the last read or write operation, incremented by one. This address stays valid between operations as long as the chip power is maintained. The address "roll over" during read is from the last byte of the last memory page to the first byte of the first page. The address "roll over" during write is from the last byte of the current page to the first byte of the same page. Once the device address with the read/write select bit set to "1" is clocked in and acknowledged by the EEPROM, the current address data word is serially clocked out. The microcontroller does not respond with an input "0" but does generate a following stop condition (see **Figure 8**).

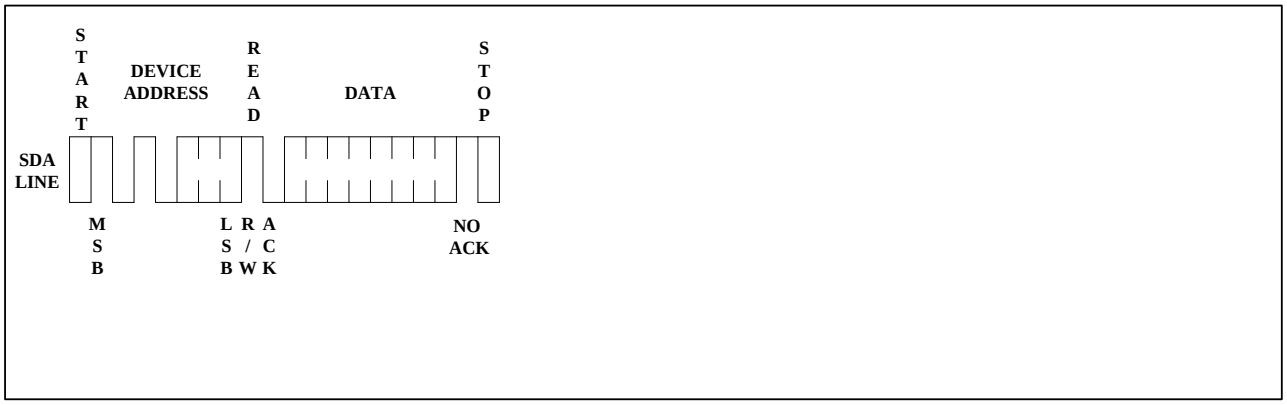

Figure 8. Current Address Read

RANDOM READ: A random read requires a "dummy" byte write sequence to load in the data word address. Once the device address word and data word address are clocked in and acknowledged by the EEPROM, the microcontroller must generate another start condition. The microcontroller now initiates a current address read by sending a device address with the read/write select bit high. The EEPROM acknowledges the device address and serially clocks out the data word. The microcontroller does not respond with a "0" but does generate a following stop condition (see **Figure 9**)

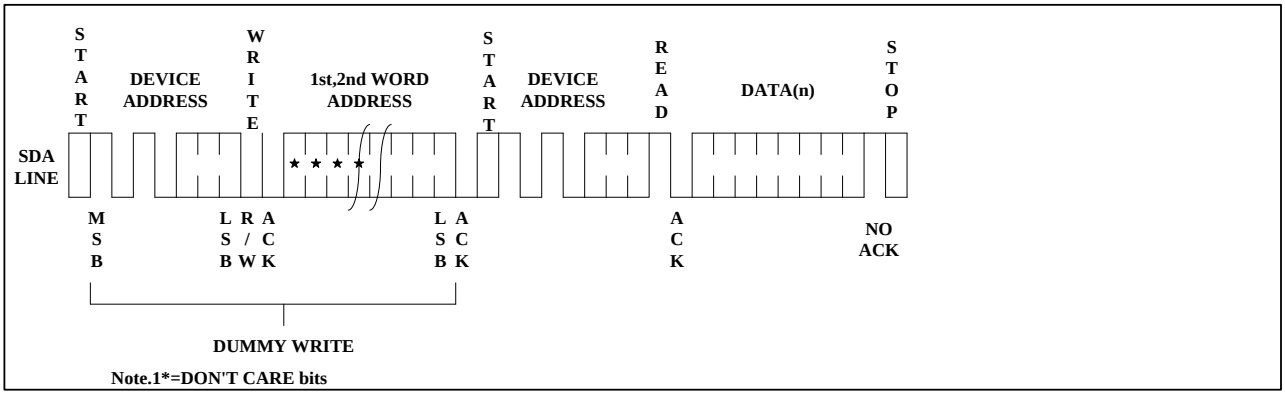

Figure 9. Random Read

©2017 Belling All Rights Reserved www.belling.com.cn

SEQUENTIAL READ: Sequential reads are initiated by either a current address read or a random address read. After the microcontroller receives a data word, it responds with an acknowledge. As long as the EEPROM receives an acknowledge, it will continue to increment the data word address and serially clock out sequential data words. When the memory address limit is reached, the data word address will "roll over" and the sequential read will continue. The sequential read operation is terminated when the microcontroller does not respond with a "0" but does generate a following stop condition (see **Figure 10**).

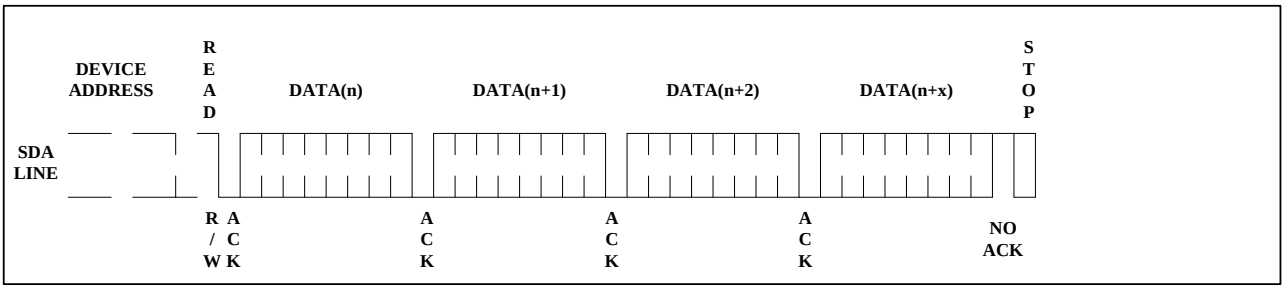

Figure 10. Sequential Read

READ IDENTIFICATION PAGE: The Identification Page (32 bytes) is an additional page which can be written and (later) permanently locked in Read-only mode.

The Identification Page can be read by issuing a Read Identification Page instruction. This instruction uses the same protocol and format as the Random Address Read (from memory array) with device type identifier defined as 1011b. The address bit B10 must be "0", MSB address bits B15/B5 are don't care, the LSB address bits B4/B0 define the byte address inside the identification Page. The number of bytes to read in the ID page must not exceed the page boundary (e.g. when reading the identification Page from location 10d, the number of bytes should be less than or equal to 22, as the ID page boundary is 32 bytes)

LOCK IDENTIFICATION PAGE: The Lock Identification Page instruction (Lock ID) permanently locks the Identification page in Read-only mode. The Lock ID instruction is similar to Byte Write (into memory array) with the following specific conditions:

Device type identifier = 1011b

Address bit B10 must be "1"; all other address bits are don't care

The data byte must be equal to the binary value xxxx xx1x, where x is don't care

READ UID PAGE: The UID Page (8 bytes) is a read-only Pre-Program page.

The UID Page can be read by issuing a Read UID Page instruction. This instruction uses the same protocol and format as the Random Address Read (from memory array) with device type identifier defined as 1011b. The MSB address bits B10 must be "1" and others address bits must be "0". The number of bytes to read in the UID page is 32 bytes, only the start 8 bytes are effective.

©2017 Belling All Rights Reserved www.belling.com.cn

Electrical Characteristics

Absolute Maximum Stress Ratings:

- DC Supply Voltage . . . . . -0.3V to +6.5V
- Input / Output Voltage . . . . . GND-0.3V to VCC+0.3V
- Operating Ambient Temperature . . . . . -40℃ to +85℃
- Storage Temperature . . . . . -65℃ to +150℃
- Electrostatic pulse (Human Body model) 8000V

Comments:

Stresses above those listed under "Absolute Maximum Ratings" may cause permanent damage to this device. These are stress ratings only. Functional operation of this device at these or any other conditions above those indicated in the operational sections of this specification is not implied or intended. Exposure to the absolute maximum rating conditions for extended periods may affect device reliability.

DC Electrical Characteristics

Applicable over recommended operating range from: TA = -40℃ to +85℃, VCC = +1.7V to +5.5V (unless otherwise noted)

Parameter	Symbol	Min	Typ	Max	Unit	Condition
Supply Voltage	V_{CC1}	1.7	-	5.5	V	@400KHz
Supply Voltage	V_{CC2}	2.5	-	5.5	V	@1MHz
Supply Current VCC=5.0V	I_{CC1}	-	0.14	0.3	mA	READ at 400KHZ
Supply Current VCC=5.0V	I_{CC2}	-	0.28	0.5	mA	WRITE at 400KHZ
Supply Current VCC=5.0V	I_{SB1}	-	0.03	0.5	μA	V_{IN}=V_{CC} or V_{SS}
Input Leakage Current	I_{L1}	-	0.10	1.0	μA	V_{IN}=V_{CC} or V_{SS}
Output Leakage Current	I_{LO}	-	0.05	1.0	μA	V_{OUT}=V_{CC} or V_{SS}
Input Low Level	V_{IL1}	-0.3	-	V_{CC}×0.3	V	V_{CC}=1.7V to 5.5V
Input High Level	V_{IH1}	V_{CC}×0.7	-	V_{CC}+0.3	V	V_{CC}=1.7V to 5.5V
Output Low Level VCC=1.7V	V_{OL1}	-	-	0.2	V	I_{OL}=0.15mA
Output Low Level VCC=5.0V	V_{OL2}	-	-	0.4	V	I_{OL}=3.0mA

Table 5

Pin Capacitance

Applicable over recommended operating range from TA = 25℃, f = 1.0 MHz, VCC = +1.7V

Parameter	Symbol	Min	Typ	Max	Unit	Condition
Input/Output Capacitance(SDA)	$C_{I/O}$	-	-	8	pF	V_{IO}=0V
Input Capacitance(A0,A1,A2,SCL)	C_{IN}	-	-	6	pF	V_{IN}=0V

Table 6

©2017 Belling All Rights Reserved www.belling.com.cn

AC Electrical Characteristics

Applicable over recommended operating range from TA = -40℃ to +85℃, VCC = +1.7V to +5.5V, CL = 1 TTL Gate and 100 pF (unless otherwise noted)

Parameter	Symbol	1.7V≤V_{CC} < 2.5V			2.5V≤V_{CC} < 5.5V			Units
		Min	Typ	Max	Min	Typ	Max	
Clock Frequency,SCL	f_{SCL}	-	-	400	-	-	1000	kHz
Clock Pulse Width Low	t_{LOW}	1.3	-	-	0.5	-	-	μs
Clock Pulse Width High	t_{HIGH}	0.6	-	-	0.26	-	-	μs
Noise Suppression Time	t_I	-	-	50	-	-	50	ns
Clock Low to Data Out Valid	t_{AA}	-	-	0.9	-	-	0.45	μs
Time the bus must be free before a new transmission can start	t_{BUF}	1.3	-	-	0.5	-	-	μs
Start Hold Time	$t_{HD:STA}$	0.6	-	-	0.25	-	-	μs
Start Setup Time	$t_{SU:STA}$	0.6	-	-	0.25	-	-	μs
Data In Hold Time	$t_{HD:DAT}$	0	-	-	0	-	-	μs
Data in Setup Time	$t_{SU:DAT}$	100	-	-	100	-	-	ns
Input Rise Time(1)	t_R	-	-	0.3	-	-	0.12	μs
Input Fall Time(1)	t_F	-	-	0.3	-	-	0.12	μs
Stop Setup Time	$t_{Su:STO}$	0.6	-	-	0.25	-	-	μs
Data Out Hold Time	t_{DH}	50	-	-	50	-	-	ns
Write Cycle Time	t_{WR}	-	1.9	3	-	1.9	3	ms
5.0V,25℃,Byte Mode(1)	Endurance	1M	-	-	1M	-	-	Write Cycle

Table 7

Notes:

1. This parameter is characterized and is not 100% tested.
2. AC measurement conditions:
   RL (connects to VCC): 1.3K
   Input pulse voltages: 0.3VCC to 0.7VCC
   Input rise and fall time: 50ns
   Input and output timing reference voltages: 0.5VCC
   The value of RL should be concerned according to the actual loading on the user's system.

©2017 Belling All Rights Reserved www.belling.com.cn

Bus Timing

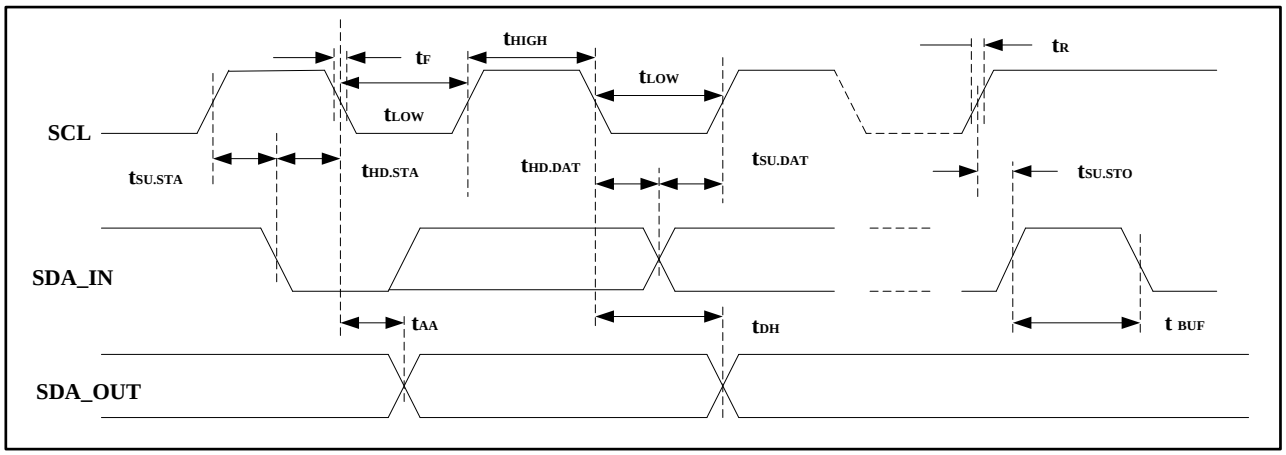

Figure 11. SCL: Serial Clock, SDA: Serial Data I/O

Write Cycle Timing

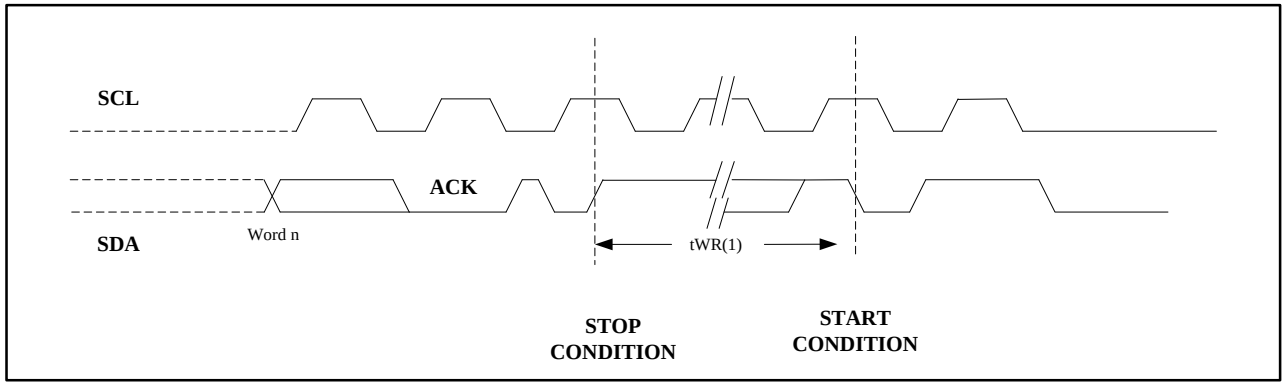

Figure 12. SCL: Serial Clock, SDA: Serial Data I/O

Notes:

The write cycle time tWR is the time from a valid stop condition of a write sequence to the end of the internal clear/write cycle.

©2017 Belling All Rights Reserved www.belling.com.cn

Package Information

PDIP Outline Dimensions

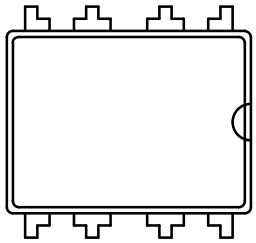

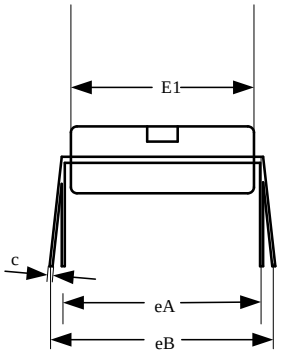

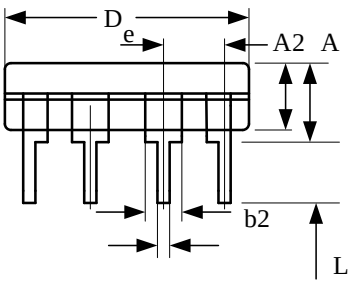

COMMON DIMENSIONS
(Unit of Measure=mm)

SYMBOL	MIN	NOM	MAX
A	3.60	3.80	4.00
A2	3.20	3.30	3.40
b	0.44	-	0.53
b2		1.52BSC	
c	0.24	-	0.32
D	9.05	9.25	9.45
E1	6.15	6.35	6.55
e		2.54BSC	
eA		7.62BSC	
eB	7.62	-	9.30
L		3.00BSC	

Figure 13

©2017 Belling All Rights Reserved www.belling.com.cn

SOP

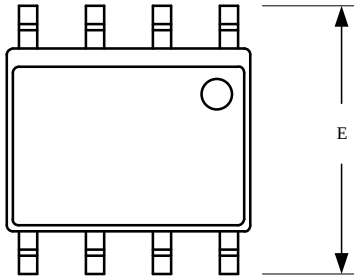

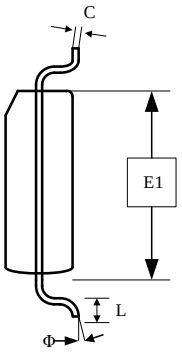

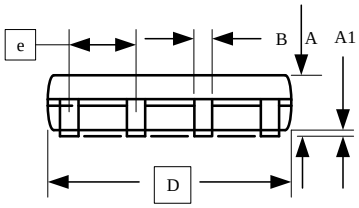

COMMON DIMENSIONS
(Unit of Measure=mm)

SYMBOL	MIN	NOM	MAX
A	1.35	-	1.75
A1	0.10	-	0.23
B	0.39	-	0.48
C	0.21	-	0.26
D	4.70	4.90	5.10
E1	3.70	3.90	4.10
E	5.80	6.00	6.20
e	1.27BSC		
L	0.50	-	0.80
Φ	0″	-	8″

Figure 14

©2017 Belling All Rights Reserved www.belling.com.cn

TSSOP

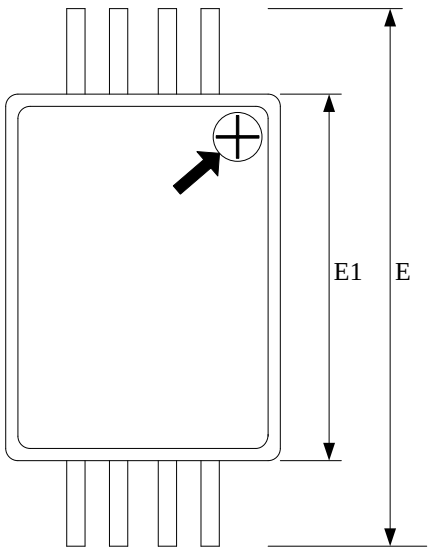

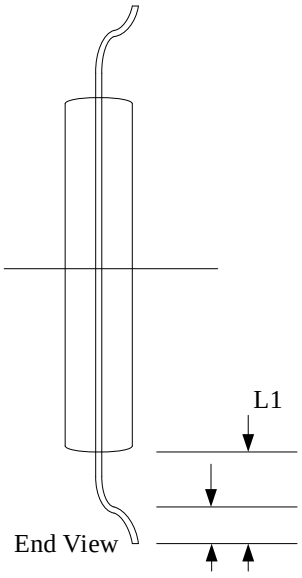

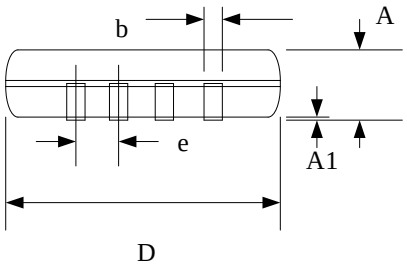

COMMON DIMENSIONS
Unit of Measure=mm

SYMBOL	MIN	NOM	MAX
D	2.90	3.00	3.10
E	6.20	6.40	6.60
E1	4.30	4.40	4.50
A	-	-	1.20
A1	0.05	-	0.15
b	0.21	-	0.30
e	0.65BSC		
L	0.45	0.60	0.75
L1	1.00REF		

Figure 15

©2017 Belling All Rights Reserved www.belling.com.cn

UDFN

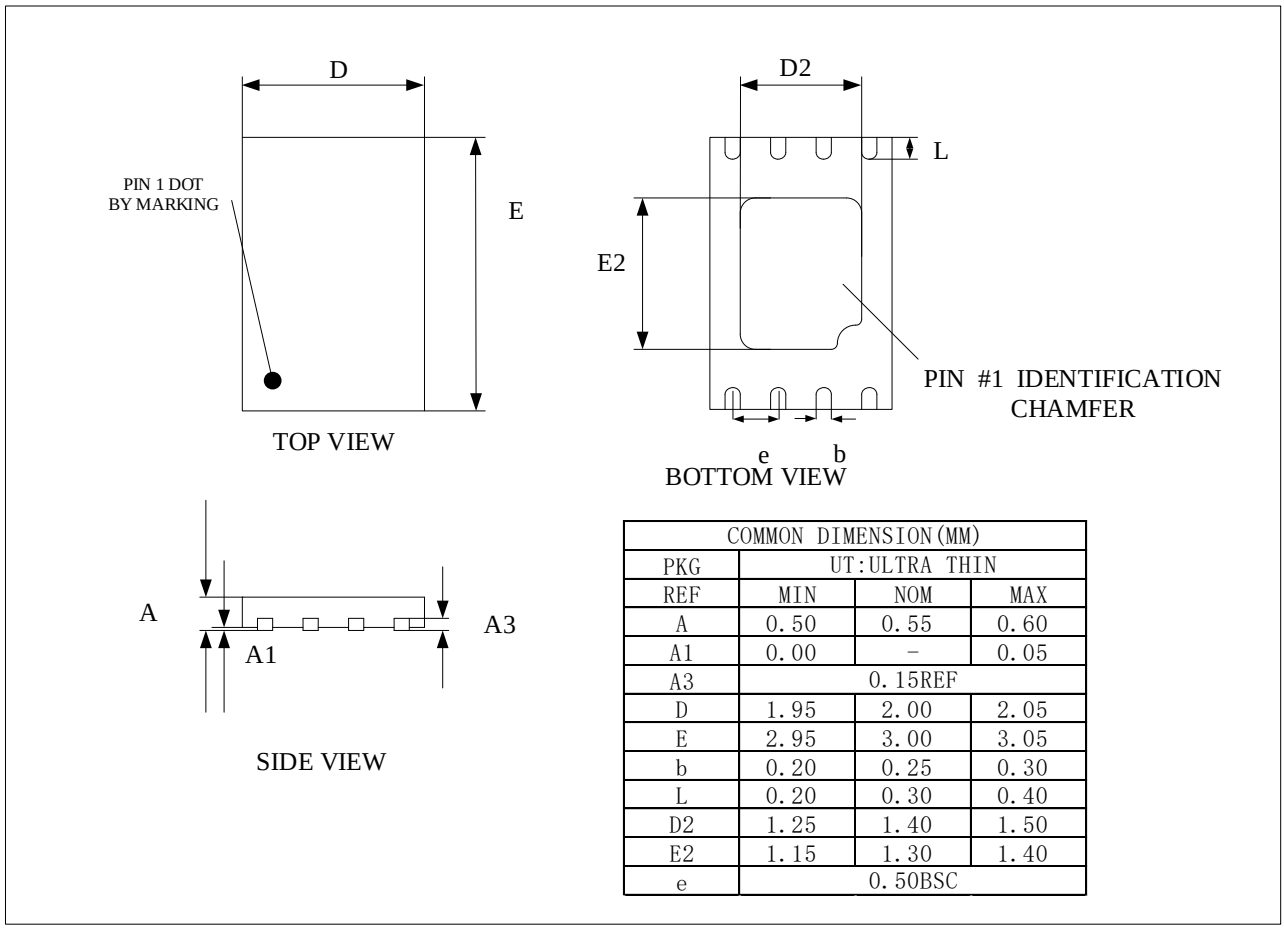

COMMON DIMENSION(MM)			
PKG	UT:ULTRA THIN		
REF	MIN	NOM	MAX
A	0.50	0.55	0.60
A1	0.00	-	0.05
A3	0.15REF		
D	1.95	2.00	2.05
E	2.95	3.00	3.05
b	0.20	0.25	0.30
L	0.20	0.30	0.40
D2	1.25	1.40	1.50
E2	1.15	1.30	1.40
e	0.50BSC		

Figure 16

©2017 Belling All Rights Reserved www.belling.com.cn

TSOT23-5

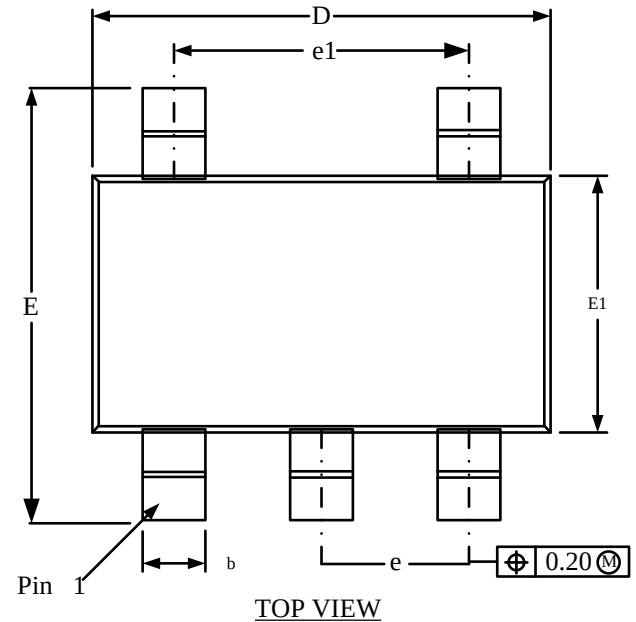

TOP VIEW

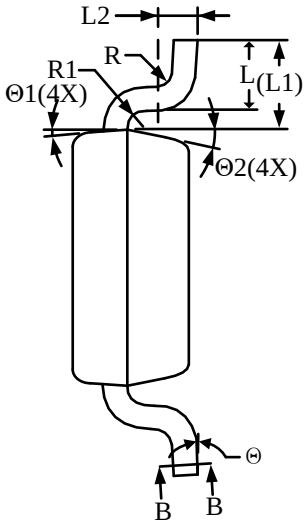

SIDE VIEW

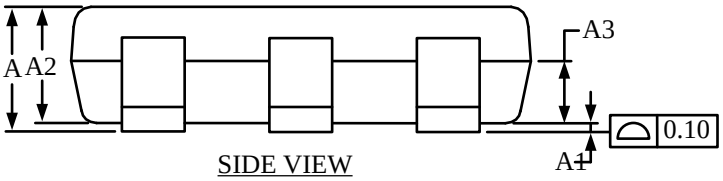

SIDE VIEW

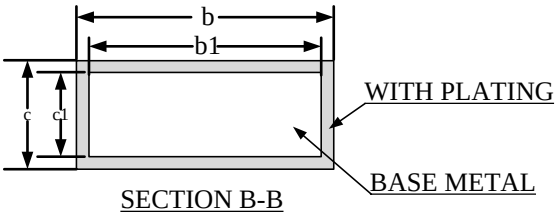

SECTION B-B

COMMON DIMENSIONS
(UNITS OF MEASURE = MILLIMETER)

SYMBOL	MIN	NOM	MAX
A	–	–	0.90
A1	0.00	–	0.15
A2	0.65	0.75	0.85
A3	0.35	0.40	0.45
b	0.36	–	0.50
b1	0.36	0.38	0.45
c	0.14	–	0.20
c1	0.14	0.15	0.16
D	2.85	2.95	3.05
E	2.65	2.80	2.95
E1	1.60	1.65	1.70
e	0.90	0.95	1.00
e1	1.80	1.90	2.00
L	0.30	0.45	0.60
L1	0.575REF		
L2	0.258BSC		
R	–	–	0.25
R1	–	–	0.25
Θ	0°	–	8°
Θ1	3°	5°	7°
Θ2	10°	12°	14°

Figure 17

©2017 Belling All Rights Reserved www.belling.com.cn

Marking Diagram

PDIP

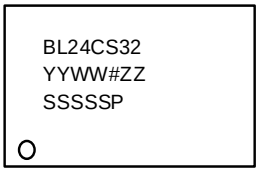

YY: year

WW :week

ZZ: assembly house

SSSSS : Lot ID

SOP

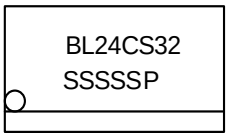

SSSSS : Lot ID

TSSOP

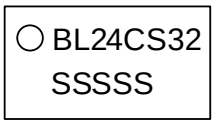

SSSSS : Lot ID

UDFN

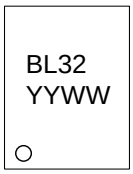

YY: year

WW :week

TSOT23-5

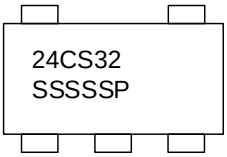

SSSSS : Lot ID

©2017 Belling All Rights Reserved www.belling.com.cn

Ordering Information

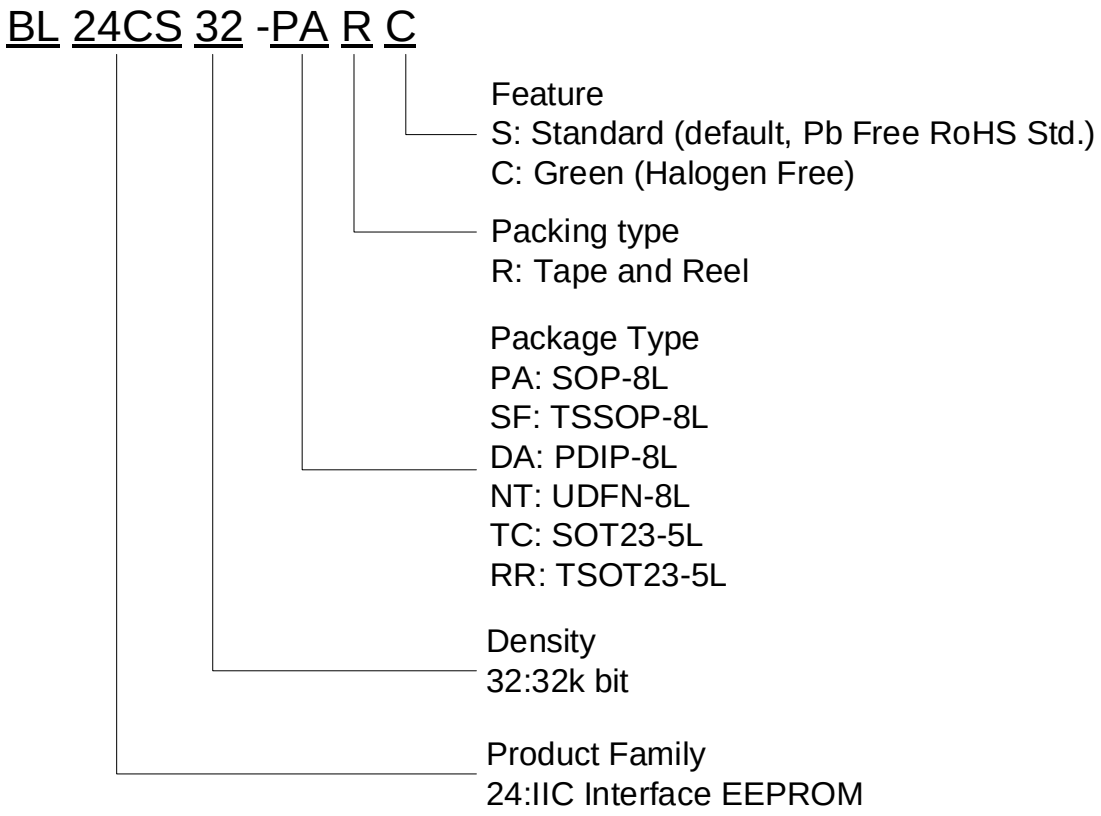

Device	Package	Shipping(Qty/Packing)
BL24C32F	SOP8	2500/Tape &Reel
BL24C32F	TSSOP8L	3000/Tape &Reel
BL24C32F	UDFN	3000/Tape &Reel
BL24C32F	TSOT23-5	3000/Tape &Reel

©2017 Belling All Rights Reserved www.belling.com.cn

Revision history

Version 1.00 BL24CS32	
Initial Version	
Version 1.01 BL24CS32	**9/7/2018**
Add TSOT23-5 Package information Modify Text and structure of documents	

©2017 Belling All Rights Reserved www.belling.com.cn