Features

- Compatible with all I²C bidirectional data transfer protocol
- Memory array:
  - 64 Kbits (8 Kbytes) of EEPROM
  - Page size: 32 bytes
- Single supply voltage and high speed:
  - 1 MHz （1.7V）

  Random and sequential Read modes
- Write:
  - Byte Write within 3 ms
  - Page Write within 3 ms
  - Partial Page Writes Allowed
- Data Protection
- Slave Address Configurable
- Schmitt Trigger, Filtered Inputs for Noise Suppression
- High-reliability
  - Endurance: 1 Million Write Cycles
  - Data Retention: 100 Years
- Enhanced ESD/Latch-up protection
  - HBM 8000V
- WLCSP4 Package

Description

- The BL24SA64C provides 65,536 bits of serial electrically erasable and programmable read-only memory (EEPROM), organized as 8,192 words of 8 bits each.
- The device is optimized for use in many industrial and commercial applications where low-power and low-voltage operation are essential.

Pin Configuration

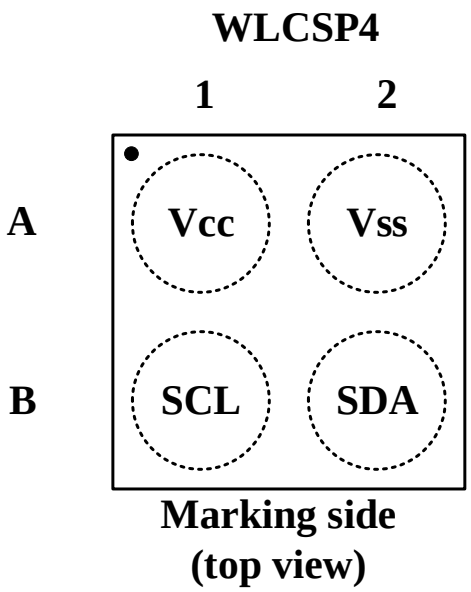

©2020 Belling All Rights Reserved www.belling.com.cn

Pin Descriptions

Pin Name	Type	Functions
SDA	I/O	Serial Data
SCL	I	Serial Clock Input
GND	P	Ground
Vcc	P	Power Supply

Table 1

Block Diagram

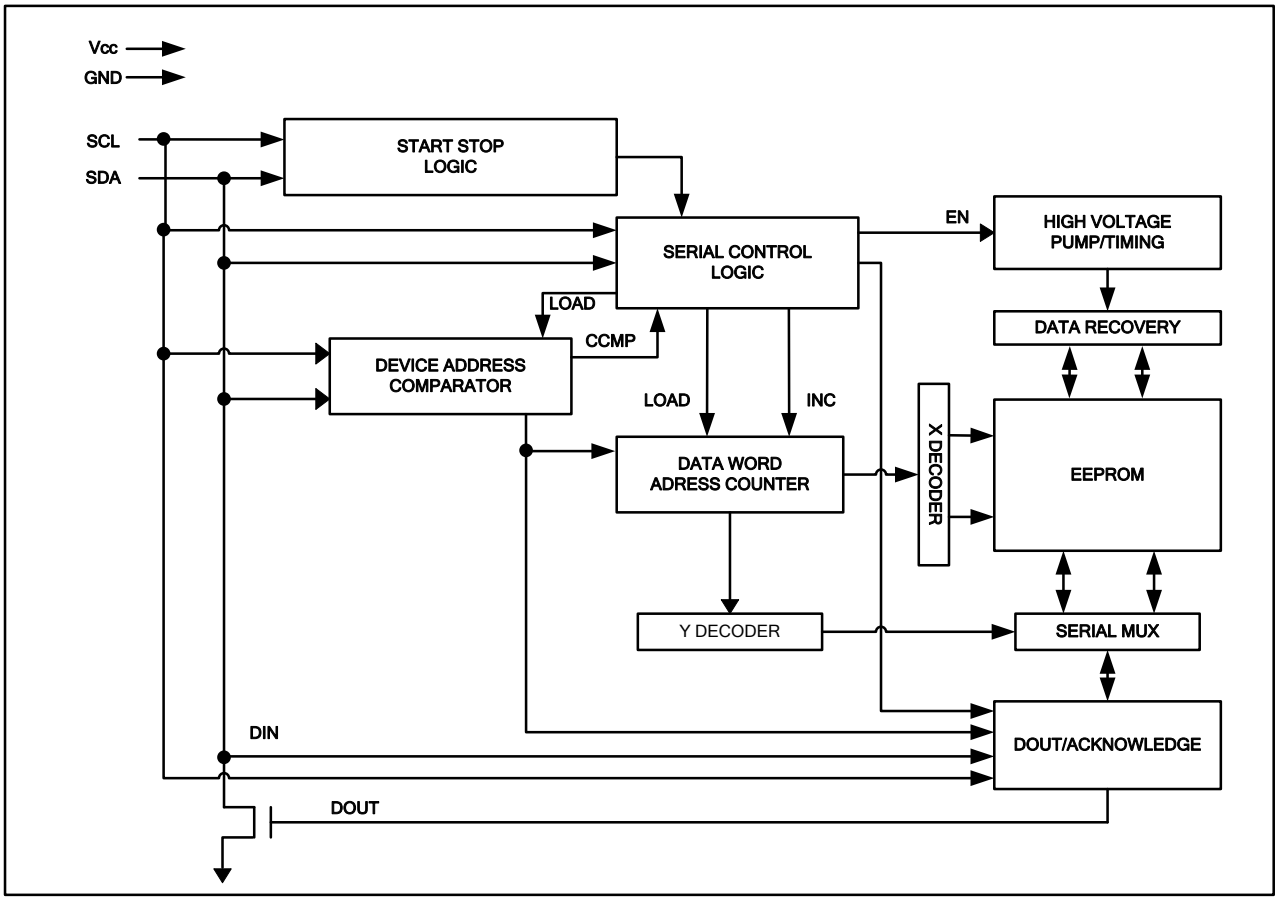

Figure 1

SERIAL DATA (SDA): The SDA pin is bi-directional for serial data transfer. This pin is open-drain driven and may be wire-ORed with any number of other open-drain or open- collector devices.

SERIAL CLOCK (SCL): The SCL input is used to positive edge clock data into each EEPROM device and negative edge clock data out of each device.

©2020 Belling All Rights Reserved www.belling.com.cn

Functional Description

1. Memory Organization

BL24SA64C, 64k SERIAL EEPROM: Internally organized with 256 pages of 32 bytes each, the 64k requires a 13-bit data word address for random word addressing.

2. Device Operation

CLOCK and DATA TRANSITIONS: The SDA pin is normally pulled high with an external device. Data on the SDA pin may change only during SCL low time periods (see **Figure 2**). Data changes during SCL high periods will indicate a start or stop condition as defined below.

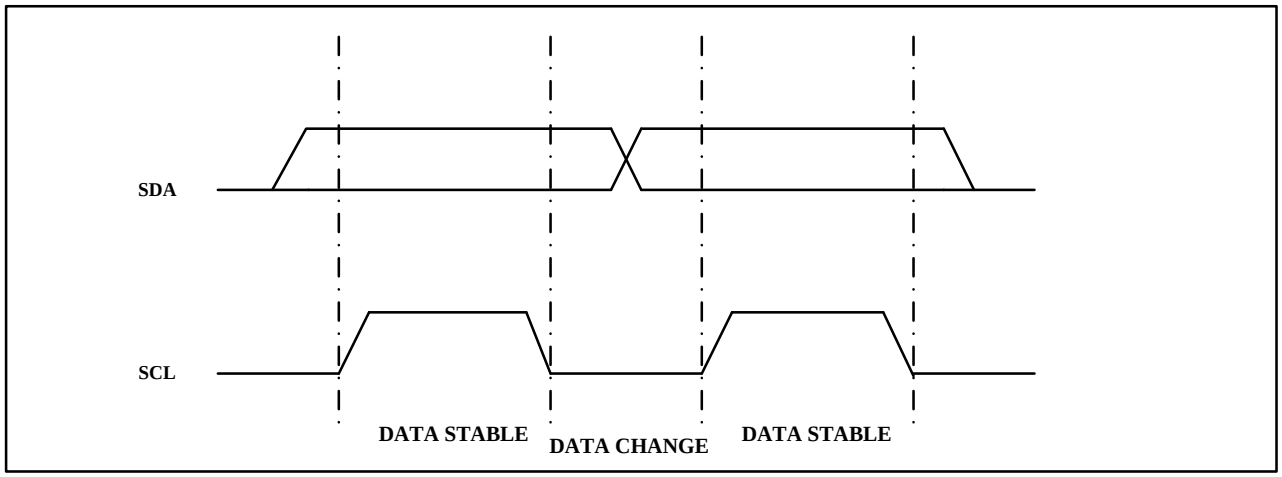

Figure 2. Data Validity

START CONDITION: A high-to-low transition of SDA with SCL high is a start condition which must precede any other command (see **Figure 3**).

STOP CONDITION: A low-to-high transition of SDA with SCL high is a stop condition. After a read sequence, the stop command will place the EEPROM in a standby power mode (see **Figure 3**).

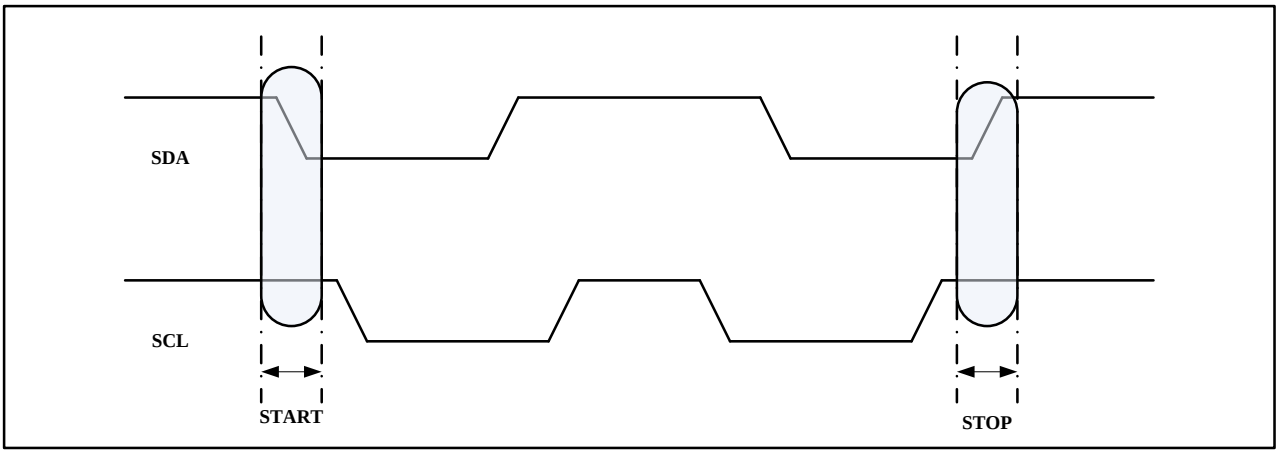

Figure 3. Start and Stop Definition

©2020 Belling All Rights Reserved www.belling.com.cn

ACKNOWLEDGE: All addresses and data words are serially transmitted to and from the EEPROM in 8-bit words. The EEPROM sends a "0" to acknowledge that it has received each word. This happens during the ninth clock cycle.

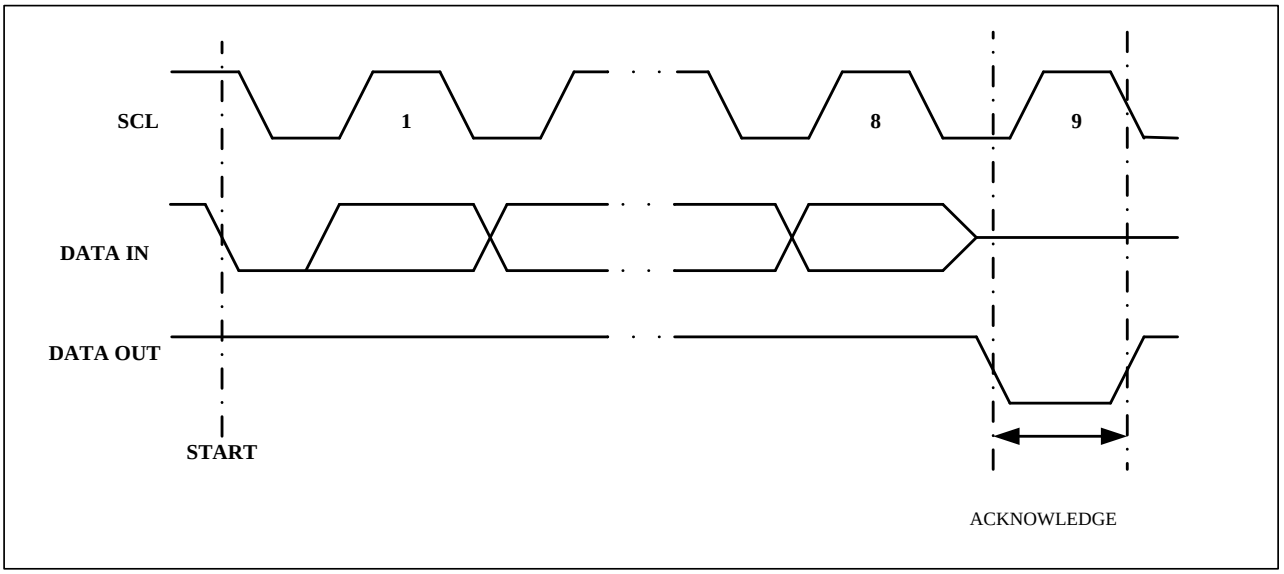

Figure 4. Output Acknowledge

STANDBY MODE: The BL24SA64C features a low-power standby mode which is enabled: (a) upon power-up and (b) after the receipt of the STOP bit and the completion of any internal operations.

MEMORY RESET: After an interruption in protocol, power loss or system reset, any two-wire part can be reset by following these steps:

1. Clock up to 9 cycles.
2. Lock SDA high in each cycle while SCL is high.
3. Create a start condition.

3. Device Addressing

The 64k EEPROM devices all require an 8-bit device address word following a start condition to enable the chip for a read or write operation (see **Figure 5**)

MSB							LSB
1	0	1	0	A2	A1	A0	R/W

Figure 5. Device Address

The device address word consists of a mandatory "1", "0" sequence for the first four most significant bits as shown. This is common to all the Serial EEPROM devices.

The fifth, sixth and seventh bits of the device address can be configured， default to 000b.

The eighth bit of the device address is the read/write operation select bit. A read operation is initiated if this bit is high and a write operation is initiated if this bit is low.

©2020 Belling All Rights Reserved www.belling.com.cn

4. Write Operations

BYTE WRITE: A write operation requires two 8-bit data word address, as **Figure 6**, following the device address word and acknowledgment. Upon receipt of this address, the EEPROM will again respond with a "0" and then clock in the first 8-bit data word. Following receipt of the 8-bit data word, the EEPROM will output a "0" and the addressing device, such as a microcontroller, must terminate the write sequence with a stop condition. At this time the EEPROM enters an internally timed write cycle, tWR, to the nonvolatile memory. All inputs are disabled during this write cycle and the EEPROM will not respond until the write is complete (see **Figure 7**).

0	*****	*****	**B12**	**B11**	**B10**	**B9**	**B8**
B7	**B6**	**B5**	**B4**	**B3**	**B2**	**B1**	**B0**

Figure 6. WORD ADDRESS

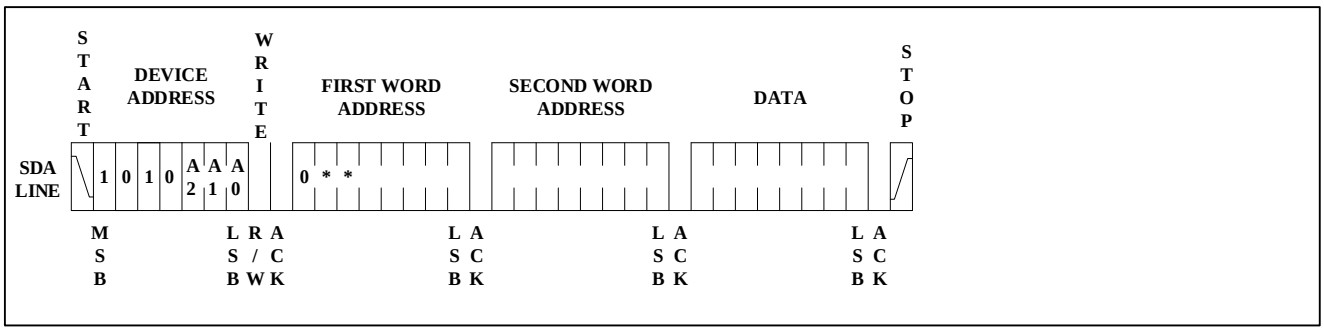

Figure 7. Byte Write

PAGE WRITE: The Page Write mode allows up to 32 bytes to be written in a single Write cycle. A page write is initiated the same as a byte write, but the microcontroller does not send a stop condition after the first data word is clocked in. Instead, after the EEPROM acknowledges receipt of the first data word, the microcontroller can transmit up to 31 more data words. The EEPROM will respond with a “0” after each data word received. The microcontroller must terminate the page write sequence with a stop condition.

The data word address lower five bits are internally incremented following the receipt of each data word. The higher data word address bits are not incremented, retaining the memory page row location. When the word address, internally generated, reaches the page boundary, the following byte is placed at the beginning of the same page. If more than 32 data words are transmitted to the EEPROM, the data word address will "roll over" and previous data will be overwritten (see **Figure 8**).

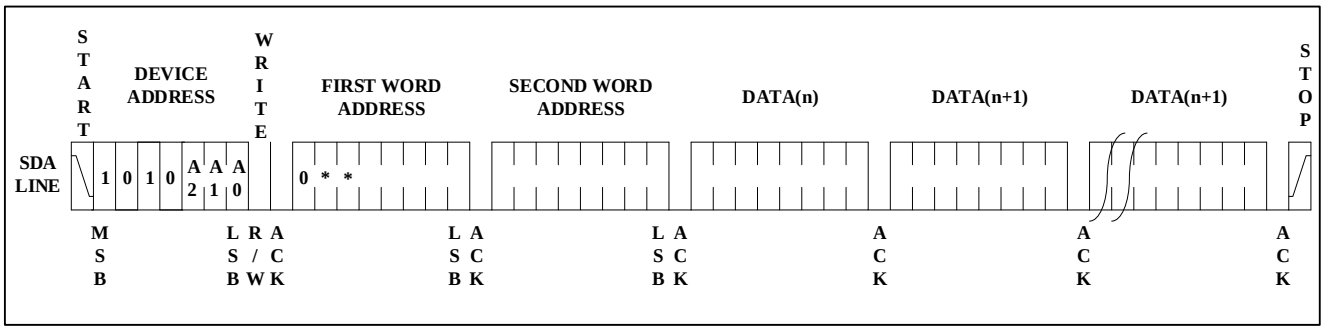

Figure 8. Page Write

©2020 Belling All Rights Reserved www.belling.com.cn

5. Read Operations

Read operations are initiated the same way as write operations with the exception that the read/write select bit in the device address word is set to "1". There are three read operations: current address read, random address read and sequential read.

CURRENT ADDRESS READ: The internal data word address counter maintains the last address accessed during the last read or write operation, incremented by one. This address stays valid between operations as long as the chip power is maintained. The address "roll over" during read is from the last byte of the last memory page to the first byte of the first page. The address "roll over" during write is from the last byte of the current page to the first byte of the same page. Once the device address with the read/write select bit set to "1" is clocked in and acknowledged by the EEPROM, the current address data word is serially clocked out. The microcontroller does not respond with an input "0" but does generate a following stop condition (see **Figure 9**).

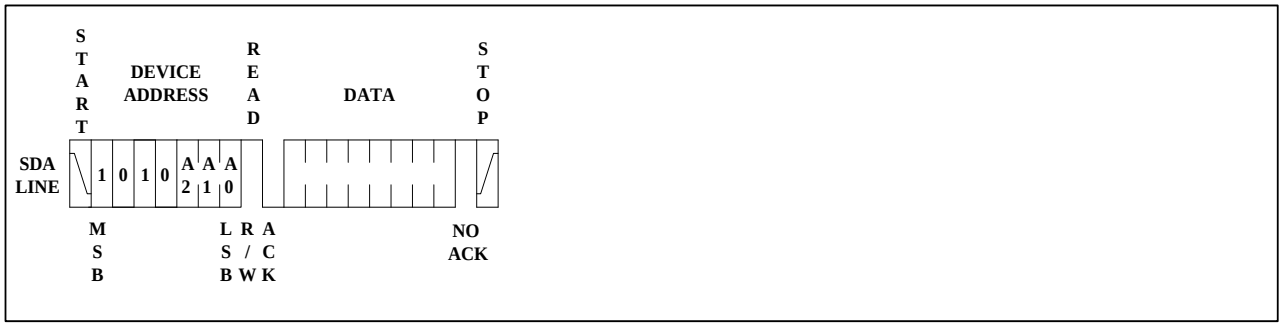

Figure 9. Current Address Read

RANDOM READ:A random read requires a "dummy" byte write sequence to load in the data word address. Once the device address word and data word address are clocked in and acknowledged by the EEPROM, the microcontroller must generate another start condition. The microcontroller now initiates a current address read by sending a device address with the read/write select bit high. The EEPROM acknowledges the device address and serially clocks out the data word. The microcontroller does not respond with a "0" but does generate a following stop condition (see **Figure 10**)

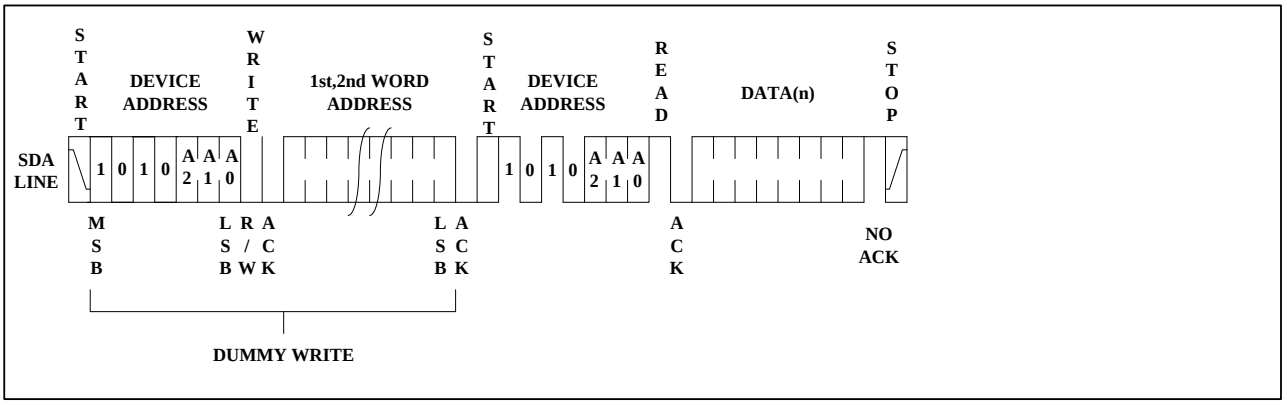

Figure 10. Random Read

©2020 Belling All Rights Reserved www.belling.com.cn

SEQUENTIAL READ: Sequential reads are initiated by either a current address read or a random address read. After the microcontroller receives a data word, it responds with an acknowledge. As long as the EEPROM receives an acknowledge, it will continue to increment the data word address and serially clock out sequential data words. When the memory address limit is reached, the data word address will "roll over" and the sequential read will continue. The sequential read operation is terminated when the microcontroller does not respond with a "0" but does generate a following stop condition (see **Figure 11**).

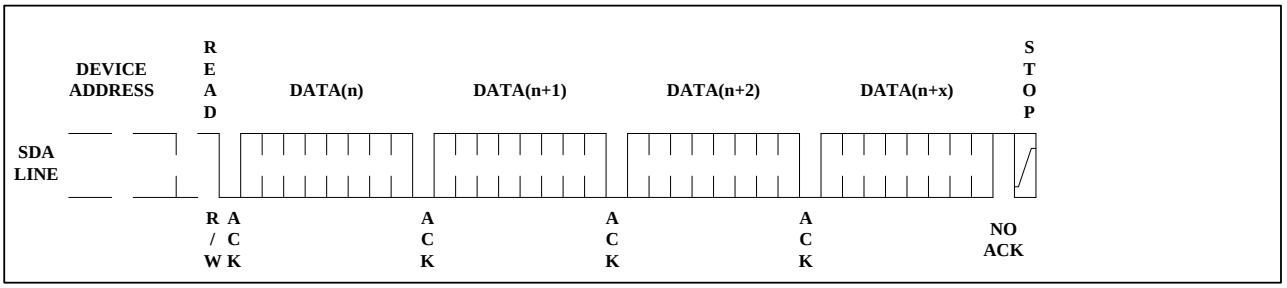

Figure 11. Sequential Read

©2020 Belling All Rights Reserved www.belling.com.cn

6. Write protection configuration

By writing specific values in a register (Table 3) located at address 1001.0xxx.xxxx.xxxxb, the memory array can be write-protected by blocks.

	Bit 7	Bit 6	Bit 5	Bit 4	Bit 3	Bit 2	Bit 1	Bit 0
Write	★	★	★	★	**Partial Write protect activation**	**Size of write protected block**	**Size of write protected block**	★
Read	0	0	0	0				0

Table 2

Notes:

Location 1001.0xxx.xxxx.xxxxb is outside of the addressing field of the EEPROM memory (8k bytes are addressed within the 000x.xxxx.xxxx.xxxx range)
Bit 7 – 4 and bit 0 are don't care bits.
Bit 3 enables or disables the partial write protection.
Bit 3=0: the whole memory can be written (no write protection)
Bit 3=1: the concerned block is write-protected
Bits 2 and 1 define the size of the memory block to be protected against write instructions:
Bit 2, Bit 1= 0, 0: the upper quarter of memory is write-protected
Bit 2, Bit 1= 0, 1: the upper half memory is write-protected
Bit 2, Bit 1= 1, 0: the upper 3/4 of memory are write-protected
Bit 2, Bit 1= 1, 1: the whole memory is write-protected
The device is delivered with the Write Protect register set to 0 (00h).
Writing in the Write protect register is performed with a Byte Write instruction at address 1001.0xxx.xxxx.xxxxb. Bits b7,b6,b5,b4,b0 of the data byte are not significant (Don't Care). Writing more than one byte will discard the write cycle (Write protect register content will not be changed).

©2020 Belling All Rights Reserved www.belling.com.cn

7. Device Addressing configuration

By writing specific values in a register (Table 4) located at address 1000.1xxx.xxxx.xxxxb, the device address can be reconfigured.

Bit 7	Bit 7	Bit 6	Bit 5	Bit 4	Bit 3	Bit 2	Bit 1	Bit 0
Write	★	★	★	★	★	A2	A1	A0
Read	0	0	0	0	0			

Table 3

Writing in the Device Address register is performed with a Byte Write instruction at address 1000.1xxx.xxxx.xxxxb. Bit 7 - 3 of the data byte are not significant (Don't Care). Writing more than one byte will discard the write cycle (The register content will not be changed).

By writing specific values in a register (Table 5) located at address 1011.0xxx.xxxx.xxxxb, the device address register can be locked.

Bit 7	Bit 7	Bit 6	Bit 5	Bit 4	Bit 3	Bit 2	Bit 1	Bit 0
Write	★	★	★	Device Address Lock	★	★	★	★
Read	0	0	0		0	0	0	0

Table 4

Bit 4 enables or disables the device address register locked.

Bit 4=1: the device address register lock enable, the device address register can NOT be reconfigurable.

Bit 4=0: the device address register lock disables, device address register can be config.

Writing in the Device Address write Protect register is performed with a Byte Write instruction at address 1011.0xxx.xxxx.xxxxb. Bit 7 - 5 and Bit 3 - 0 of the data byte are not significant (Don't Care). Writing more than one byte will discard the write cycle (The register content will not be changed).

©2020 Belling All Rights Reserved www.belling.com.cn

Electrical Characteristics

Absolute Maximum Stress Ratings:

- DC Supply Voltage . . . . . -0.3V to +6.5V
- Input / Output Voltage . . . . . GND-0.3V to VCC+0.3V
- Operating Ambient Temperature . . . . . -40℃ to +85℃
- Storage Temperature . . . . . .-65℃ to +150℃
- Electrostatic pulse (Human Body model) 8000V

Comments:

Stresses above those listed under "Absolute Maximum Ratings" may cause permanent damage to this device. These are stress ratings only. Functional operation of this device at these or any other conditions above those indicated in the operational sections of this specification is not implied or intended. Exposure to the absolute maximum rating conditions for extended periods may affect device reliability.

DC Electrical Characteristics

Applicable over recommended operating range from: TA = -40℃ to +85℃, VCC = +1.7V to +5.5V (unless otherwise noted)

Parameter	Symbol	Min	Typ	Max	Unit	Condition
Supply Voltage	VCC1	1.7	-	5.5	V	-
Supply Current VCC=1.8V	ICC1	-	0.14	0.3	mA	READ at 400KHZ
Supply Current VCC=1.8V	ICC2	-	0.28	0.5	mA	WRITE at 400KHZ
Supply Current VCC=1.8V	ISB1	-	0.03	0.5	μA	VIN=VCC or VSS
Input Leakage Current	IL1	-	0.10	1.0	μA	VIN=VCC or VSS
Output Leakage Current	ILO	-	0.05	1.0	μA	VOUT=VCC or VSS
Input Low Level	VIL1	-0.3	-	VCC×0.3	V	VCC=1.7V to 5.5V
Input High Level	VIH1	VCC×0.7	-	VCC+0.3	V	VCC=1.7V to 5.5V
Output Low Level VCC=1.7V	VOL1	-	-	0.2	V	IOL=0.15mA
Output Low Level VCC=5.0V	VOL2	-	-	0.4	V	IOL=3.0mA

Table 5

Pin Capacitance

Applicable over recommended operating range from TA = 25℃, f = 1.0 MHz, VCC = +1.7V

Parameter	Symbol	Min	Typ	Max	Unit	Condition
Input/Output Capacitance(SDA)	CI/O	-	-	8	pF	VIO=0V
Input Capacitance(A0, A1, A2, SCL)	CIN	-	-	6	pF	VIN=0V

Table 6

©2020 Belling All Rights Reserved www.belling.com.cn

AC Electrical Characteristics

Applicable over recommended operating range from TA = -40℃ to +85℃, VCC = +1.7V to +5.5V, CL = 1 TTL Gate and 100 pF (unless otherwise noted)

Parameter	Symbol	Min	Typ	Max	Min	Typ	Max	Units
Clock Frequency, SCL	f_{SCL}		400			1000		KHZ
Clock Pulse Width Low	t_{LOW}	1.3	-	-	0.5	-	-	μs
Clock Pulse Width High	t_{HIGH}	0.6	-	-	0.26	-	-	μs
Noise Suppression Time	t_I	-	-	50	-	-	50	ns
Clock Low to Data Out Valid	t_{AA}	-	-	0.9	-	-	0.45	μs
Time the bus must be free before a new transmission can start	t_{BUF}	1.3	-	-	0.5	-	-	μs
Start Hold Time	$t_{HD:STA}$	0.6	-	-	0.25	-	-	μs
Start Setup Time	$t_{SU:STA}$	0.6	-	-	0.25	-	-	μs
Data In Hold Time	$t_{HD:DAT}$	0	-	-	0	-	-	μs
Data in Setup Time	$t_{SU:DAT}$	100	-	-	100	-	-	ns
Input Rise Time(1)	t_R	-	-	0.3	-	-	0.12	μs
Input Fall Time(1)	t_F	-	-	0.3	-	-	0.12	μs
Stop Setup Time	$t_{Su:STO}$	0.6	-	-	0.25	-	-	μs
Data Out Hold Time	t_{DH}	50	-	-	50	-	-	ns
Write Cycle Time	t_{WR}	-	1.9	3	-	1.9	3	ms
5.0V, 25℃, Byte Mode(1)	Endurance	1M	-	-	1M	-	-	Write Cycle

Table 7

Notes:

1. This parameter is characterized and is not 100% tested.
2. AC measurement conditions:
   RL (connects to VCC): 1.3 k
   Input pulse voltages: 0.3 VCC to 0.7 VCC
   Input rise and fall time: 50 ns
   Input and output timing reference voltages: 0.5 VCC
   The value of RL should be concerned according to the actual loading on the user's system.

©2020 Belling All Rights Reserved www.belling.com.cn

Bus Timing

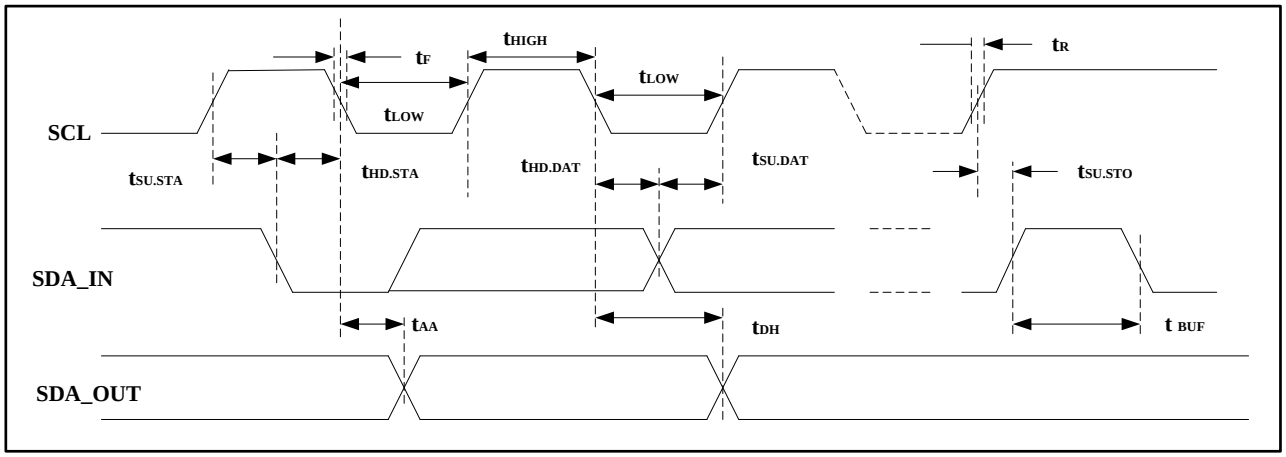

Figure 12. SCL: Serial Clock, SDA: Serial Data I/O

Write Cycle Timing

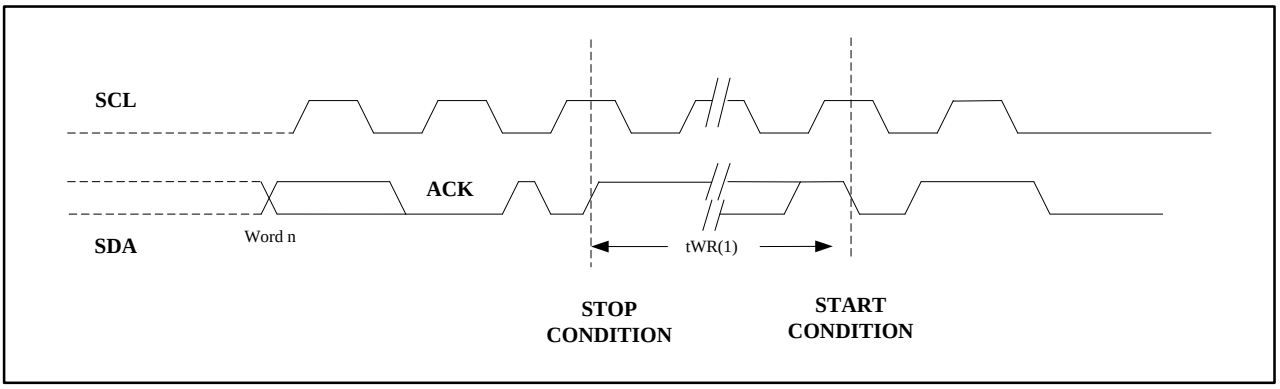

Figure 13. SCL: Serial Clock, SDA: Serial Data I/O

Notes:

The write cycle time tWR is the time from a valid stop condition of a write sequence to the end of the internal clear/write cycle.

©2020 Belling All Rights Reserved www.belling.com.cn

WLCSP 0.4 pitch

Package Information

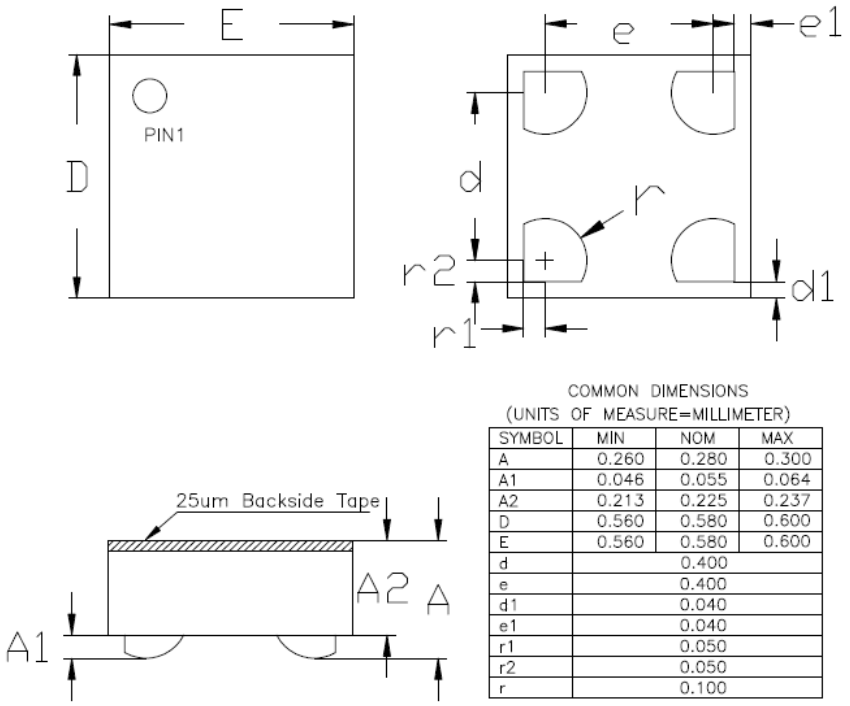

COMMON DIMENSIONS
(UNITS OF MEASURE=MILLIMETER)

SYMBOL	MIN	NOM	MAX
A	0.260	0.280	0.300
A1	0.046	0.055	0.064
A2	0.213	0.225	0.237
D	0.560	0.580	0.600
E	0.560	0.580	0.600
d		0.400	
e		0.400	
d1		0.040	
e1		0.040	
r1		0.050	
r2		0.050	
r		0.100	

Marking Diagram

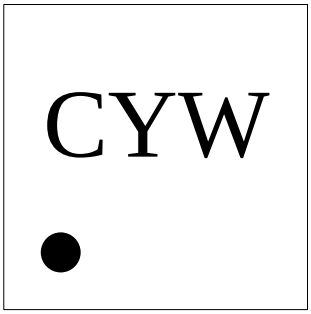

1 PIN MARK

Y:The last digits of the year

W:week code.

Y	1	…	3	4	5	…	9	0
Year	2021	…	2023	2024	2025	…	2029	2020

W	A	…	Y	Z	a	…	y	z
Week	1	…	25	26	27	…	51	52

©2020 Belling All Rights Reserved www.belling.com.cn

WLCSP 0.35 pitch

Package Information

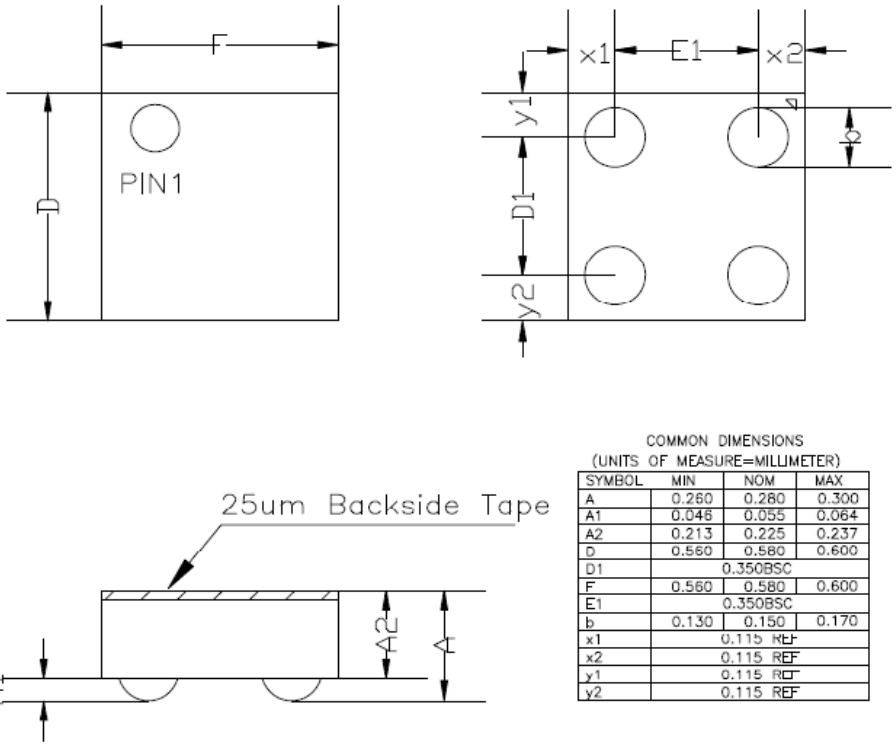

COMMON DIMENSIONS
(UNITS OF MEASURE=MILLIMETER)

SYMBOL	MIN	NOM	MAX
A	0.260	0.280	0.300
A1	0.046	0.055	0.064
A2	0.213	0.225	0.237
D	0.560	0.580	0.600
D1		0.350BSC	
F	0.560	0.580	0.600
E1		0.350BSC	
b	0.130	0.150	0.170
x1		0.115 REF	
x2		0.115 REF	
y1		0.115 REF	
y2		0.115 REF	

Marking Diagram

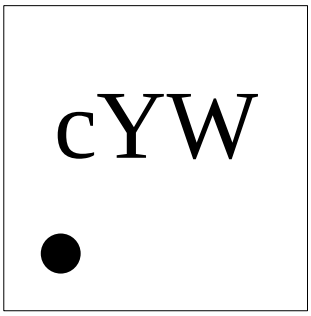

1 PIN MARK

Y:The last digits of the year

W:week code.

Y	1	…	3	4	5	…	9	0
Year	2021	…	2023	2024	2025	…	2029	2020

W	A	…	Y	Z	a	…	y	z
Week	1	…	25	26	27	…	51	52

©2020 Belling All Rights Reserved www.belling.com.cn

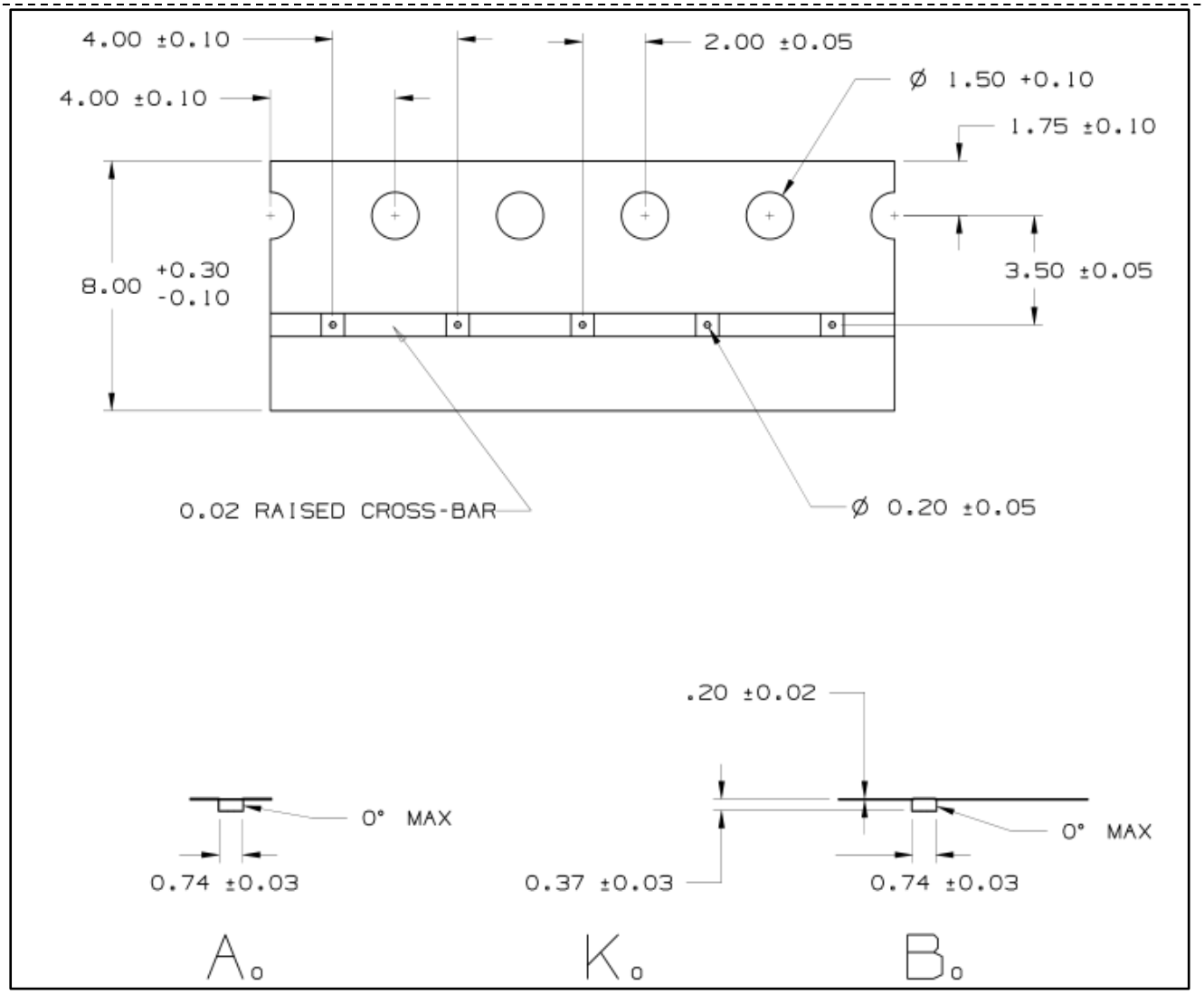

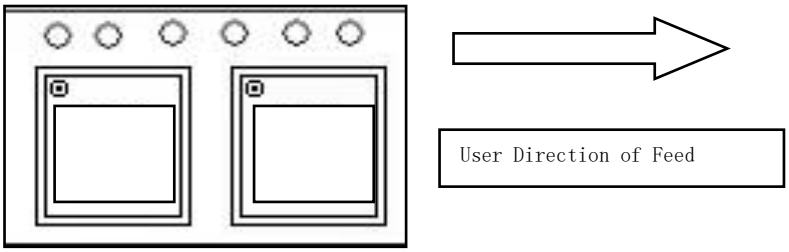

©2020 Belling All Rights Reserved www.belling.com.cn

Ordering Information

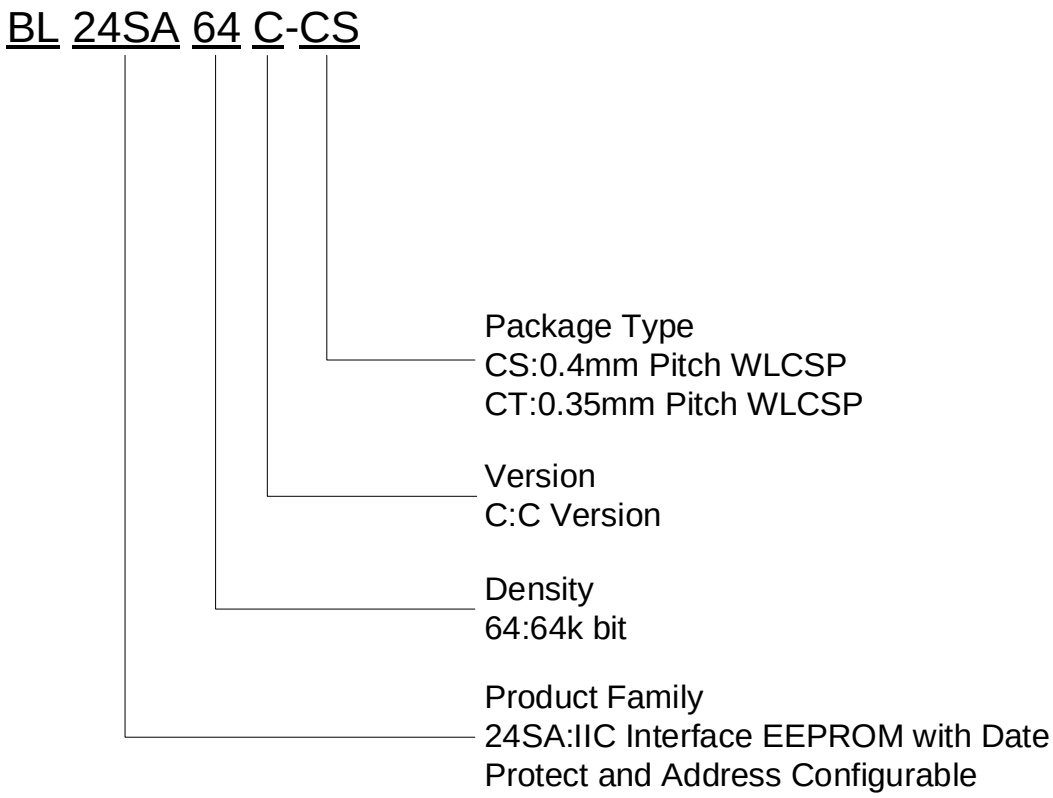

Device	Package	Shipping (Qty/Packing)
BL24SA64C	**WLCSP-4, 0.580*0.580 (Pb-Free/Halogen Free)**	**5000/Tape &Reel**

©2020 Belling All Rights Reserved www.belling.com.cn

Revision history

Version 1.00 BL24SA64C	**2/18/2020**
Initial Version	
Version 1.01 BL24SA64C	**7/7/2020**
Update the Marking Diagram Information Update the description of the device address write protect.	
Version 1.02 BL24SA64C	**9/27/2020**
Update the Package Information	

©2020 Belling All Rights Reserved www.belling.com.cn