Features

- Serial Peripheral Interface (SPI) data transfer protocol
- Memory array:
  - 1M bits (128 Kbytes) of EEPROM
  - Page size: 256 bytes
  - Additional Write lockable page
- Single supply voltage and high speed:
  - BL25CM1A 2MHz （2.8V - 5.5V）
  - BL25CM1A5 5MHz （2.8V - 5.5V）
- Random and sequential Read modes
- Write:
  - Write within 8 ms
  - Partial Page Writes Allowed
- Write Protect: quarter, half or whole memory array
- High-reliability
  - Endurance: 1 Million Write Cycles
  - Data Retention: 100 Years
- Enhanced ESD/Latch-up protection
  - HBM 8000V
  - 8-lead SOP and WLCSP8 packages

Description

- The BL25CM1A devices are Electrically Erasable Programmable Memory (EEPROM) organized as 131072 x 8 bits, accessed through the SPI bus.
- The BL25CM1A can operate with a supply range from 2.8V to 5.5V.
- The BL25CM1A offers an additional page, named the Identification Page (256 bytes). The Identification Page can be used to store sensitive application parameters which can be (later) permanently locked in Read-only mode.

Pin Configuration

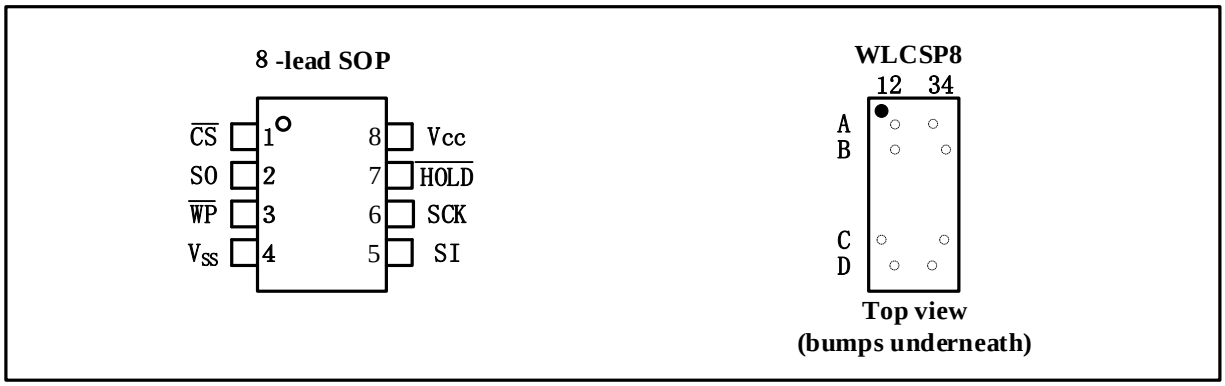

©2018 Belling All Rights Reserved www.belling.com.cn

Pin Descriptions

Pin Name	Type	Functions
$\overline{CS}$	I	Chip Select
SO	O	Serial Data Output
$\overline{WP}$	I	Write Protect
V_{SS}	P	Ground
V_{CC}	P	Power Supply
$\overline{HOLD}$	I	Hold
SCK	I	Serial Clock
SI	I	Serial Data Input

Table 1

Position	A	B	C	D
1	-	-	SCK	-
2	V_{CC}	$\overline{HOLD}$	-	SI
3	$\overline{CS}$	-	-	V_{SS}
4	-	SO	$\overline{WP}$	-

Table 2

Block Diagram

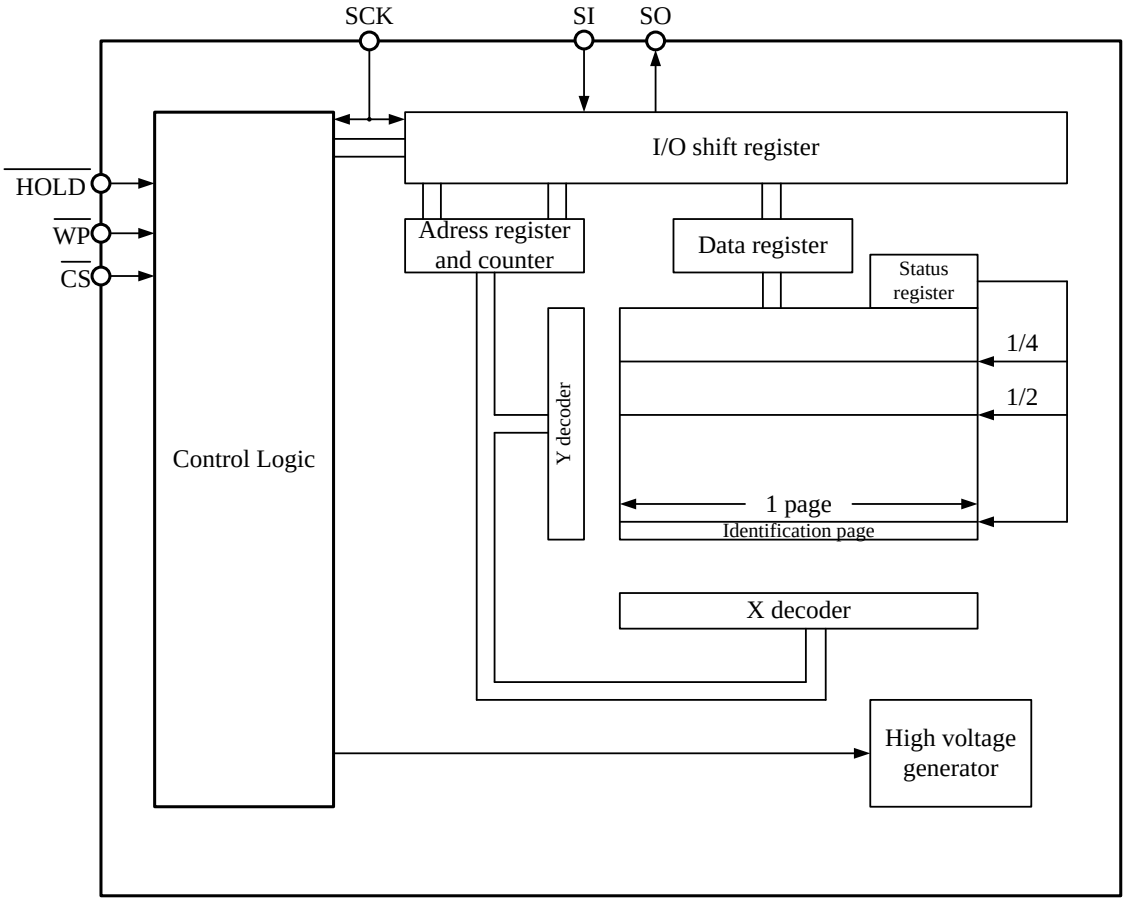

Figure 1

©2018 Belling All Rights Reserved www.belling.com.cn

Serial Data Input (SI):

The SPI Serial data input (SI) is used to serially receive write instructions, addresses or data to the device on the rising edge of the Serial Clock (SCK) input pin.

Serial Data Output (SO): The SPI Serial data output (SO) is used to read data or status from the device on the falling edge of CLK.

Serial Clock (SCK): The SPI Serial Clock Input (SCK) pin provides the timing for serial input and output operations.

Chip Select ($\overline{CS}$): The SPI Chip Select ($\overline{CS}$) pin enables and disables device operation. When ($\overline{CS}$) is high, the device is deselected and the Serial Data Output (SO) pins are at high impedance. When deselected, the devices power consumption will be at standby levels unless an internal write cycle is in progress. When ($\overline{CS}$) is brought low, the device will be selected, power consumption will increase to active levels and instructions can be written to and data read from the device. After power-up, ($\overline{CS}$) must transition from high to low before a new instruction will be accepted.

Hold ($\overline{HOLD}$): The $\overline{HOLD}$ pin allows the device to be paused while it is actively selected. When $\overline{HOLD}$ is brought low, while $\overline{CS}$ is low, the SO pin will be at high impedance and signals on the SI and SCK pins will be ignored (don't care). When $\overline{HOLD}$ is brought high, device operation can resume. The $\overline{HOLD}$ function can be useful when multiple devices are sharing the same SPI signals. The $\overline{HOLD}$ pin is active low.

Write Protect ($\overline{WP}$): The Write Protect ($\overline{WP}$) pin is used in conjunction with the Status Register Write Disable (SRWD) Bit to prevent the Status Registers from being written. Write Protect ($\overline{WP}$) pin and Status Register Write Disable (SRWD) Bit enable the device to be put in the Hardware Protected mode (when Status Register Write Disable (SRWD) Bit is set to 1, and Write Protect ($\overline{WP}$) pin is driven low).

Functional Description

The BL25CM1A device supports the Serial Peripheral Interface (SPI) bus protocol, modes (0,0) and (1,1). The device contains an 8−bit instruction register. The instruction set and associated op−codes are listed in Table 3.

Reading data stored in the BL25CM1A is accomplished by simply providing the READ command and an address. Writing to the BL25CM1A, in addition to a WRITE command, address and data, also requires enabling the device for writing by first setting certain bits in a Status Register, as will be explained later.

After a high to low transition on the $\overline{CS}$ input pin, the BL25CM1A will accept any one of the six instruction op−codes listed in Table 3 and will ignore all other possible 8−bit combinations. The communication protocol follows the timing from Figure 14.

The BL25CM1A features an additional Identification Page (256 bytes) which can be accessed for Read and Write operations when the IPL bit from the Status Register is set to "1". The user can also choose to make the Identification Page permanent write protected by setting the LIP bit from the Status Register (LIP= "1").

Instruction	Opcode	Operation
WREN	0000 0110	Enable Write Operations
WRDI	0000 0100	Disable Write Operations
RDSR	0000 0101	Read Status Register
WRSR	0000 0001	Write Status Register
READ	0000 0011	Read Data from Memory
WRITE	0000 0010	Write Data to Memory
RDID	1000 0011	Read identification page
WRID	1000 0010	Write identification page
RDLS	1000 0011	Reads the identification page lock status
LID	1000 0010	Locks the identification page in read-only mode

Table 3

©2018 Belling All Rights Reserved www.belling.com.cn

1. Status Register

The Status Register, as shown in Table 4, contains a number of status and control bits.

7	6	5	4	3	2	1	0
SRWD	0	0	0	BP1	BP0	WEL	$\overline{\text{READY}}$

Table 4

$\overline{\text{READY}}$: The $\overline{\text{READY}}$ bit indicates whether the device is busy with a write operation. This bit is automatically set to 1 during an internal write cycle, and reset to 0 when the device is ready to accept commands. For the host, this bit is read only.

BP0, BP1: The BP0 and BP1 (Block Protect) bits determine which blocks are currently write protected. They are set by the user with the WRSR command and are non−volatile. The user is allowed to protect a quarter, one half or the entire memory, by setting these bits according to Table 5. The protected blocks then become read−only.

Status Register Bits		Array Address Protected	Protection
BP1	BP0		
0	0	None	No Protection
0	1	18000h−1FFFFh	Quarter Array Protection
1	0	10000h−1FFFFh	Half Array Protection
1	1	00000h−1FFFFh	Full Array Protection

Table 5

SRWD: The SRWD (Status Register Write Disable) bit acts as an enable for the $\overline{\text{WP}}$ pin. Hardware write protection is enabled when the $\overline{\text{WP}}$ pin is low and the SRWD bit is 1. This condition prevents writing to the status register and to the block protected sections of memory. While hardware write protection is active, only the non−block protected memory can be written. Hardware write protection is disabled when the $\overline{\text{WP}}$ pin is high or the SRWD bit is 0. The SRWD bit, $\overline{\text{WP}}$ pin and WEL bit combine to either permit or inhibit Write operations, as detailed in Table 6.

SRWD	WP	WEL	Protected Blocks	Unprotected Blocks	Status Register
0	X	0	Protected	Protected	Protected
0	X	1	Protected	Writable	Writable
1	Low	0	Protected	Protected	Protected
1	Low	1	Protected	Writable	Protected
X	High	0	Protected	Protected	Protected
X	High	1	Protected	Writable	Writable

Table 6

2. Write Operations

The BL25CM1A device powers up into a write disable state. The device contains a Write Enable Latch (WEL) which must be set before attempting to write to the memory array or to the status register. In addition, the address of the memory location(s) to be written must be outside the protected area, as defined by BP0 and BP1 bits from the status register.

Write Enable and Write Disable: The internal Write Enable Latch and the corresponding Status Register WEL

©2018 Belling All Rights Reserved www.belling.com.cn

bit are set by sending the WREN instruction to the BL25CM1A. Care must be taken to take the $\overline{CS}$ input high after the WREN instruction, as otherwise the Write Enable Latch will not be properly set. WREN timing is illustrated in Figure 2. The WREN instruction must be sent prior to any WRITE or WRSR instruction.

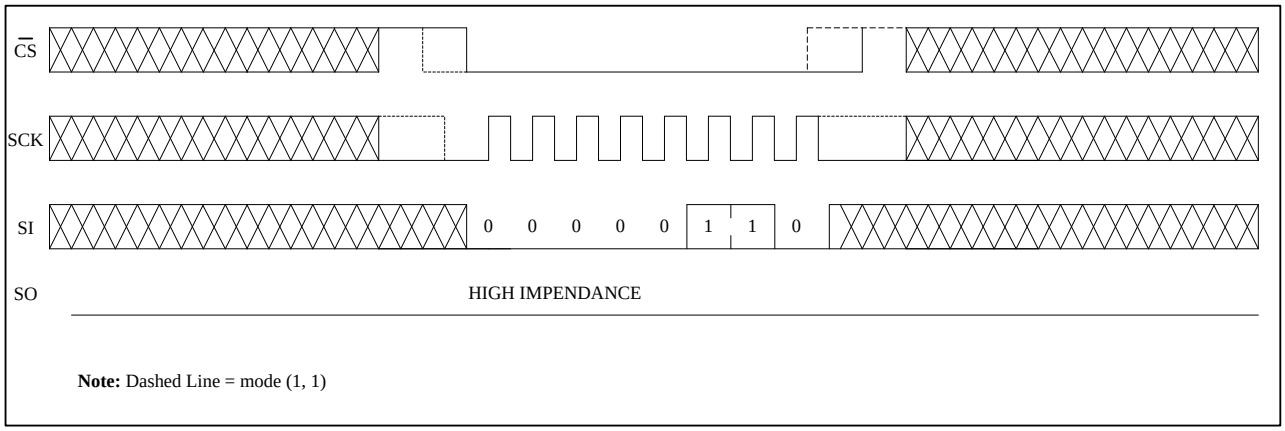

Figure 2

The internal write enable latch is reset by sending the WRDI instruction as shown in Figure 3. Disabling write operations by resetting the WEL bit, will protect the device against inadvertent writes.

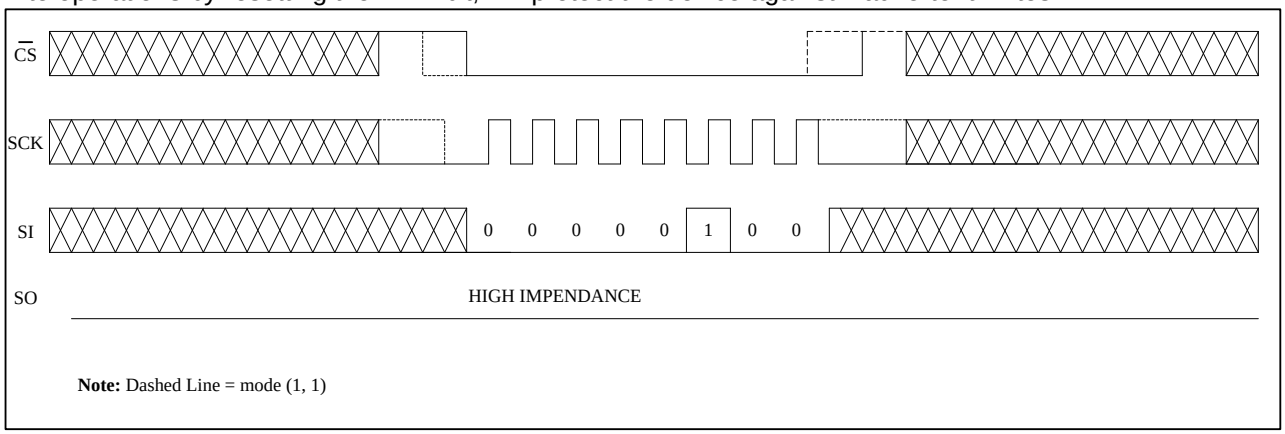

Figure 3

Byte Write: Once the WEL bit is set, the user may execute a write sequence, by sending a WRITE instruction, a 24−bit address and a data byte as shown in Figure 4. Only 17 significant address bits are used by the BL25CM1A. The rest are don't care bits, as shown in Table 7. Internal programming will start after the low to high $\overline{CS}$ transition. During an internal write cycle, all commands, except for RDSR (Read Status Register) will be ignored. The $\overline{READY}$ bit will indicate if the internal write cycle is in progress ($\overline{READY}$ high), or the device is ready to accept commands ($\overline{READY}$ low).

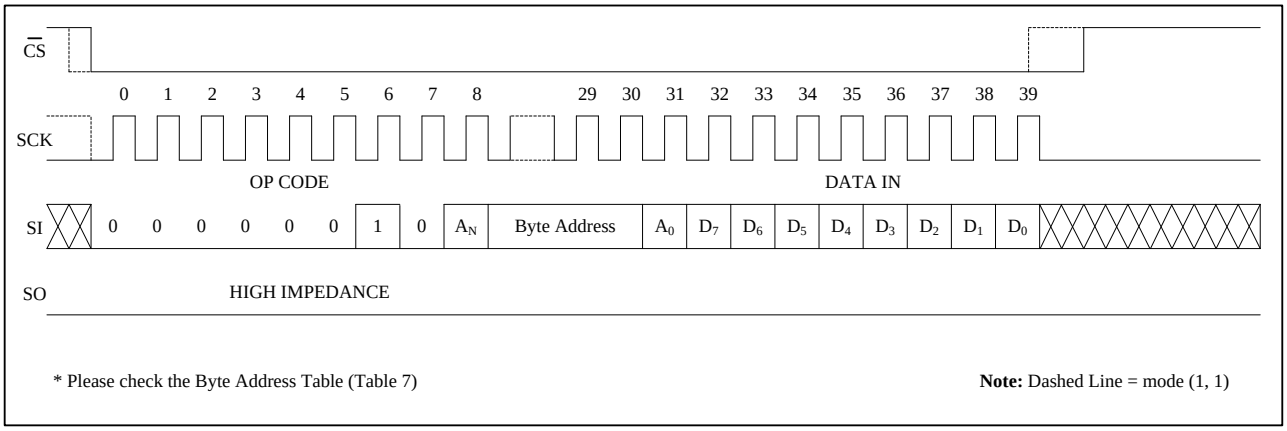

Figure 4

©2018 Belling All Rights Reserved www.belling.com.cn

Page Write: After sending the first data byte to the BL25CM1A, the host may continue sending data, up to a total of 256 bytes, according to timing shown in Figure 5. After each data byte, the lower order address bits are automatically incremented, while the higher order address bits (page address) remain unchanged. If during this process the end of page is exceeded, then loading will “roll over” to the first byte in the page, thus possibly overwriting previously loaded data. Following completion of the write cycle, the BL25CM1A is automatically returned to the write disable state.

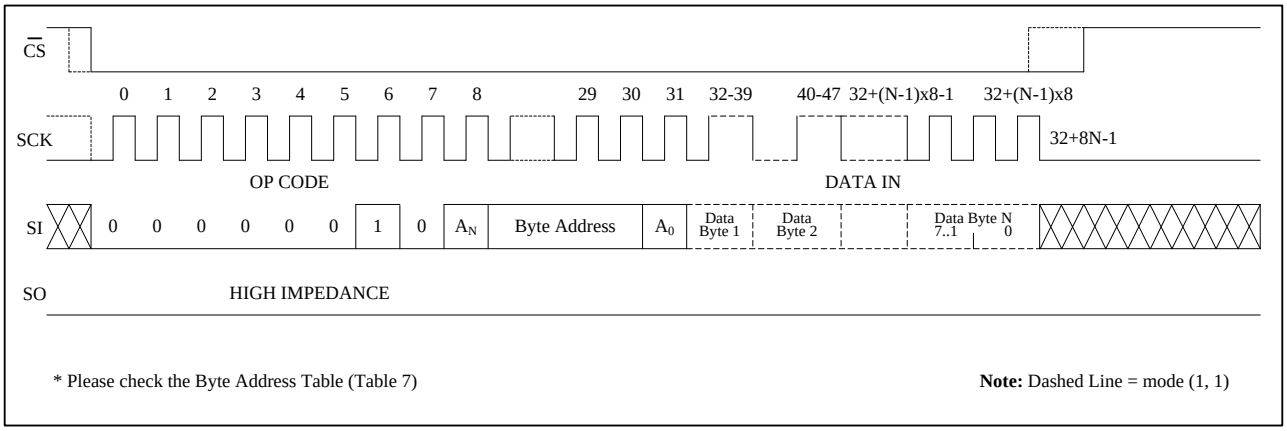

Figure 5

Write Identification Page: The additional 256-byte Identification Page (IP) (256 bytes) is an additional page which can be written and (later) permanently locked in Read-only mode. Writing this page is achieved with the Write Identification Page instruction， according to timing shown in Figure 6. Address bit A10 must be 0, upper address bits are Don't Care, the lower address bits [A7:A0] address bits define the byte address inside the identification page. The byte address must not exceed the 256-byte page boundary.

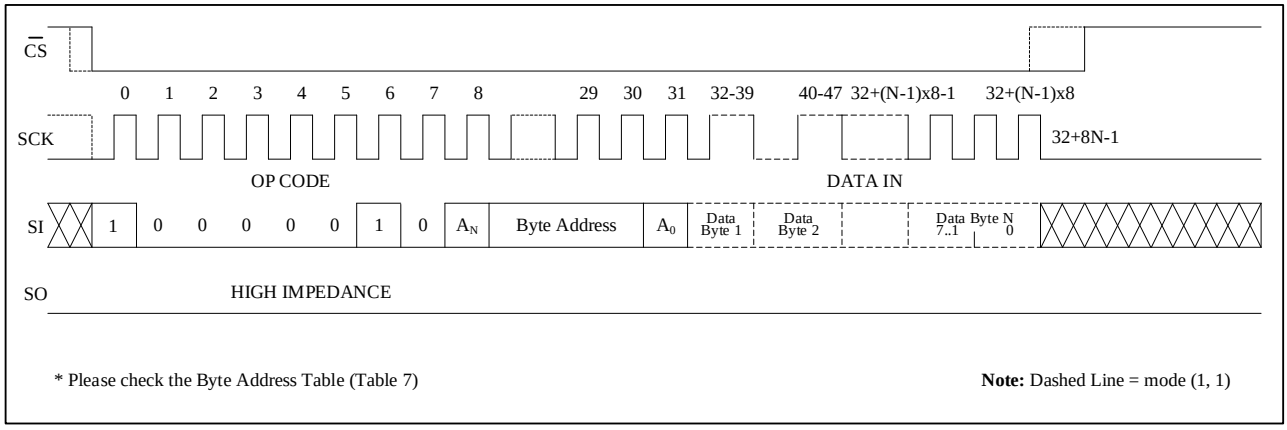

Figure 6

Device	Address Significant Bits	Address Don’t Care Bits	# Address Clock Pulses
Main Memory Array	A16 – A0	A23 – A17	24
Identification Page	A7 – A0	A23 – A8	24

Table 7

©2018 Belling All Rights Reserved www.belling.com.cn

Write Status Register: The Status Register is written by sending a WRSR instruction according to timing shown in Figure 6. Only bits 2, 3, 4, 5, 6 and 7 can be written using the WRSR command.

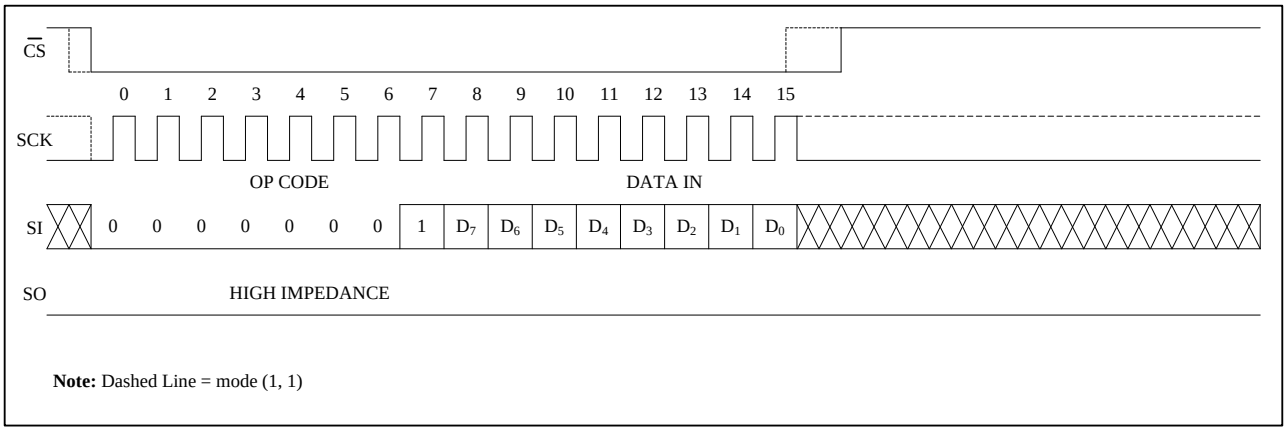

Figure 7

Lock Identification Page: The Lock ID instruction permanently locks the Identification Page in read-only mode. Before this instruction can be accepted, a Write Enable (WREN) instruction must have been executed. Lock Identification page is achieved with the Write Identification Page instruction, according to timing shown in Figure 8. Address bit A10 must be 1, all other address bits are Don't Care. The data bit1 must be“1”, other bits don’t care.

The instruction is discarded, and is not executed, under the following conditions:

- If a Write cycle is already in progress,
- If the Block Protect bits (BP1, BP0) = (1,1),
- If a rising edge on Chip Select (CS) happens outside of a byte boundary.

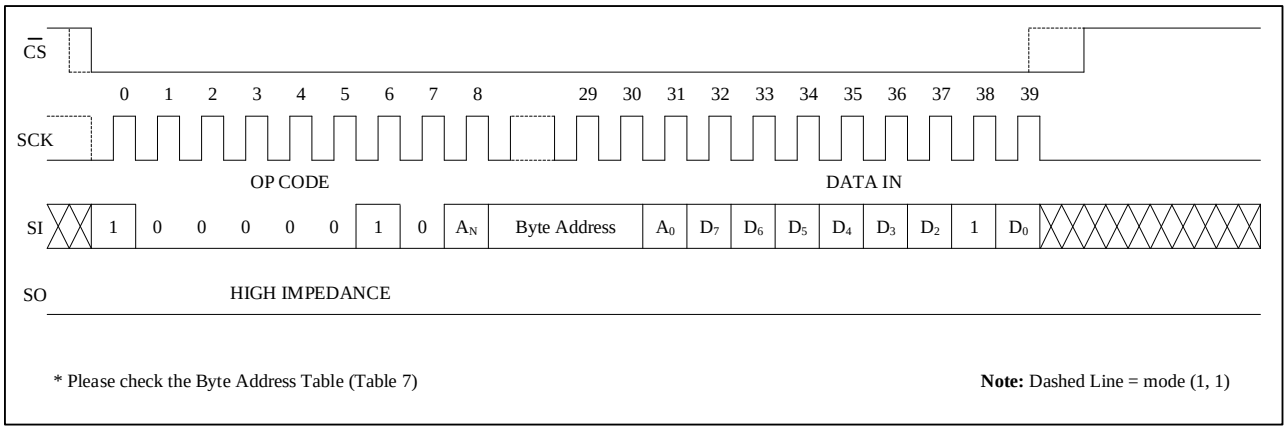

Figure 8

©2018 Belling All Rights Reserved www.belling.com.cn

Write Protection: The Write Protect ($\overline{WP}$) pin can be used to protect the Block Protect bits BP0 and BP1 against being inadvertently altered. When $\overline{WP}$ is low and the SRWD bit is set to “1”, write operations to the Status Register are inhibited. $\overline{WP}$ going low while $\overline{CS}$ is still low will interrupt a write to the status register. If the internal write cycle has already been initiated, $\overline{WP}$ going low will have no effect on any write operation to the Status Register. The $\overline{WP}$ pin function is blocked when the SRWD bit is set to “0”. The $\overline{WP}$ input timing is shown in Figure 9.

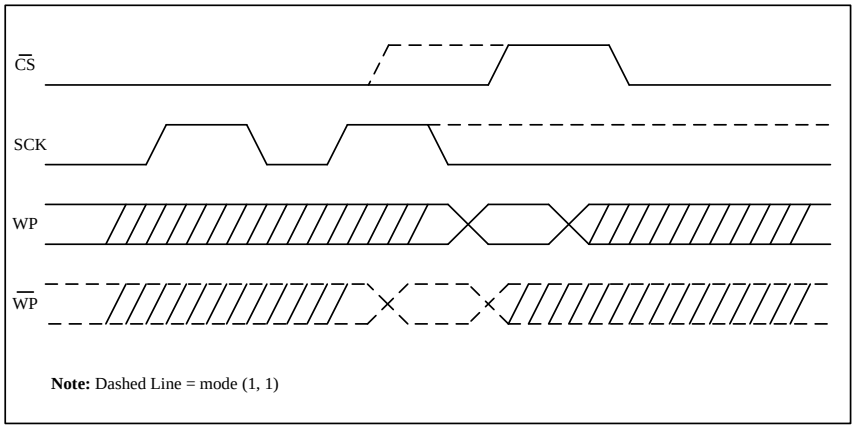

Figure 9

©2018 Belling All Rights Reserved www.belling.com.cn

3. Read Operations

Read from Memory Array: To read from memory, the host sends a READ instruction followed by a 24−bit address (see Table 6 for the number of significant address bits). After receiving the last address bit, the BL25CM1A will respond by shifting out data on the SO pin (as shown in Figure 10). Sequentially stored data can be read out by simply continuing to run the clock. The internal address pointer is automatically incremented to the next higher address as data is shifted out. After reaching the highest memory address, the address counter “rolls over” to the lowest memory address, and the read cycle can be continued indefinitely. The read operation is terminated by taking $\overline{CS}$ high.

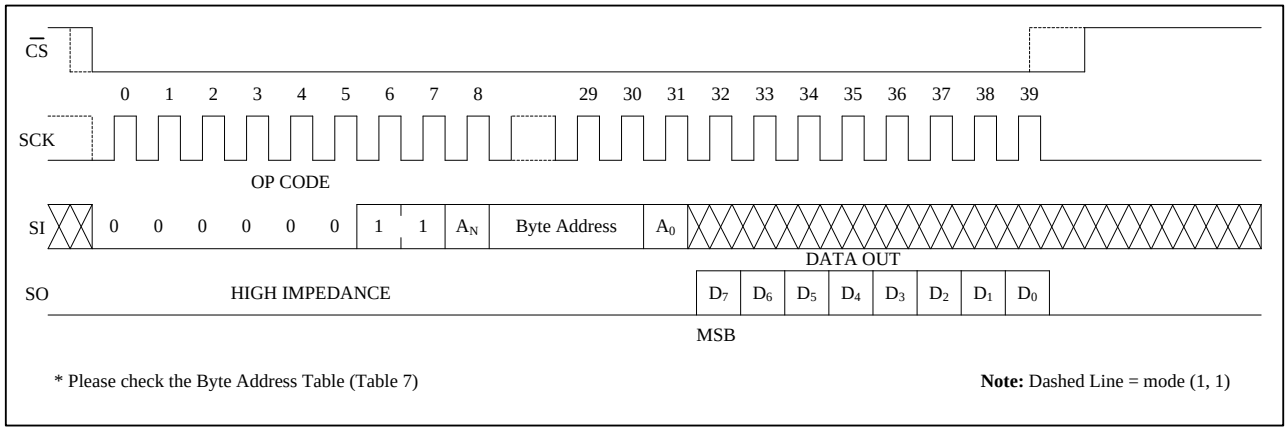

Figure 10

Read Identification Page: Reading the additional 256-byte Identification Page (IP) is achieved using the RDID instruction， according to timing shown in Figure 11. Address bit A10 must be 0, upper address bits are Don't Care, the lower address bits [A7:A0] address bits define the byte address inside the identification page. The byte address must not exceed the 256-byte page boundary.

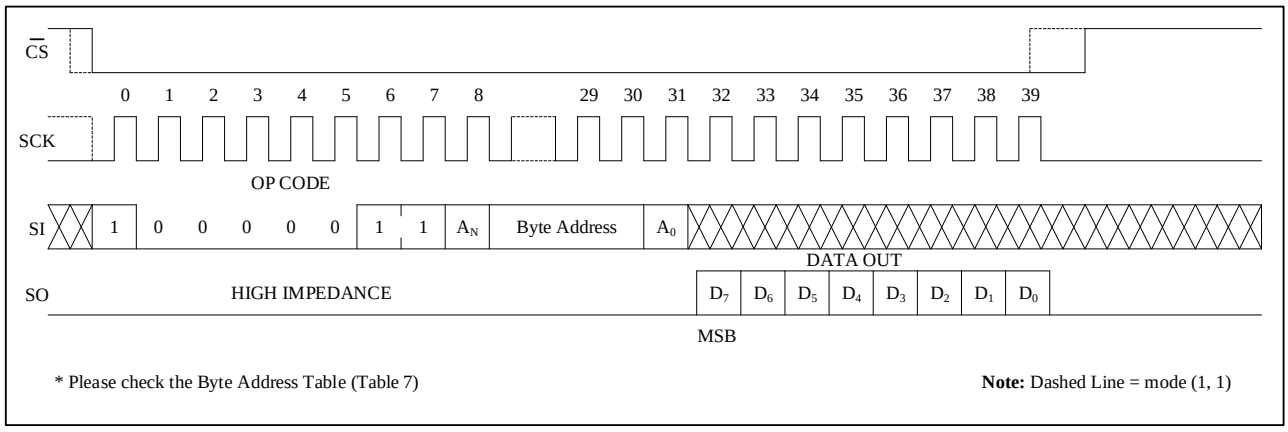

Figure 11

©2018 Belling All Rights Reserved www.belling.com.cn

Read Status Register: To read the status register, the host simply sends a RDSR command. After receiving the last bit of the command, the BL25CM1A will shift out the contents of the status register on the SO pin (Figure 12). The status register may be read at any time, including during an internal write cycle.

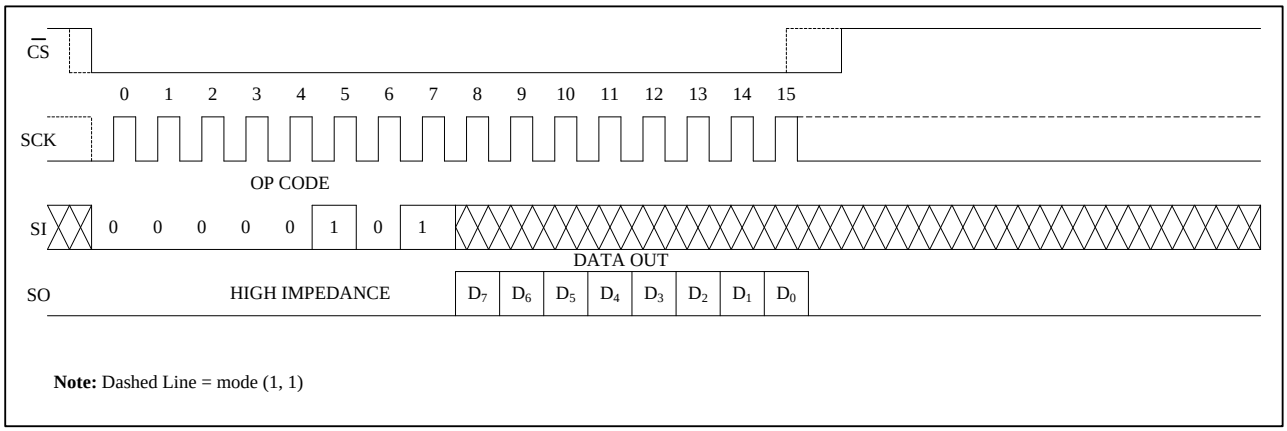

Figure 12

Read Identification Page Lock Status: To read Identification Page Lock status, the host simply sends a RDLS command, according to timing shown in Figure 11. The address bit A10 must be 1, all other address bits are Don't Care. The Lock bit is the bit0 of the byte read on the SO pin. It is at “1” when the lock is active and at “0” when the lock is not active. The same date byte may be read at any time, including during an internal write cycle.

©2018 Belling All Rights Reserved www.belling.com.cn

4. Hold Operation

The $\overline{HOLD}$ input can be used to pause communication between host and BL25CM1A. To pause, $\overline{HOLD}$ must be taken low while SCK is low (Figure 13). During the hold condition the device must remain selected ($\overline{CS}$ low). During the pause, the data output pin (SO) is tri−stated (high impedance) and SI transitions are ignored. To resume communication, $\overline{HOLD}$ must be taken high while SCK is low.

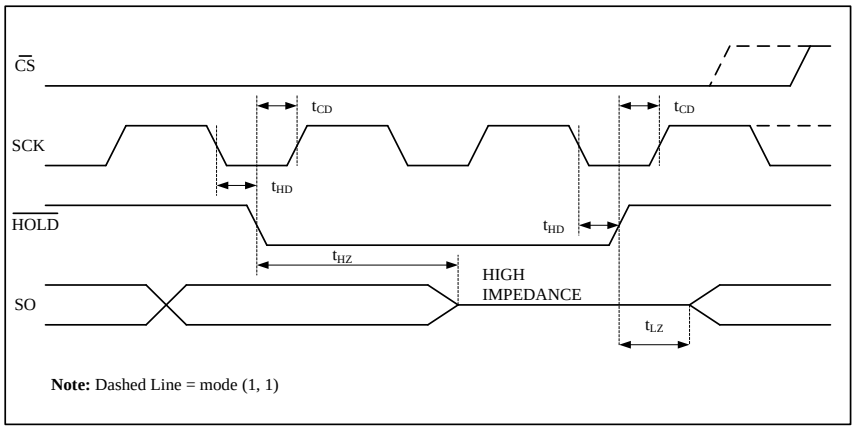

Figure 13

5. Design Considerations

The BL25CM1A device incorporates Power−On Reset (POR) circuitry which protects the internal logic against powering up in the wrong state. The device will power up into Standby mode after VCC exceeds the POR trigger level and will power down into Reset mode when VCC drops below the POR trigger level. This bi−directional POR behavior protects the device against 'brown−out' failure following a temporary loss of power.

The BL25CM1A device powers up in a write disable state and in a low power standby mode. A WREN instruction must be issued prior to any writes to the device.

After power up, the $\overline{CS}$ pin must be brought low to enter a ready state and receive an instruction. After a successful byte/page write or status register write, the device goes into a write disable mode. The $\overline{CS}$ input must be set high after the proper number of clock cycles to start the internal write cycle. Access to the memory array during an internal write cycle is ignored and programming is continued. Any invalid op−code will be ignored and the serial output pin (SO) will remain in the high impedance state.

©2018 Belling All Rights Reserved www.belling.com.cn

Electrical Characteristics

Absolute Maximum Stress Ratings:

Parameters	Ratings	Units
Storage Temperature	–65 to +150	℃
Voltage on any Pin with Respect to Ground (Note 1)	–0.5 to +6.5	V
VESD（HBM）	8000	V

Table 8

Comments：

Stresses exceeding those listed in the Maximum Ratings table may damage the device. If any of these limits are exceeded, device functionality should not be assumed, damage may occur and reliability may be affected.

RELIABILITY CHARACTERISTICS (Note 4):

Symbol	Parameter	Min	Units
N_{END} (Notes 2, 3)	Endurance	1,000,000	Program/Erase Cycles
TDR	Data Retention	100	Years

Table 9

©2018 Belling All Rights Reserved www.belling.com.cn

D. C. OPERATING CHARACTERISTICS:

(VCC = 2.8 V to 5.5 V, unless otherwise specified)

BL25CM1A	TA =-40℃ to +85℃	VCC = +2.8V to +5.5V
BL25CM1AE1	TA =-40℃ to +105℃	
BL25CM1AE0	TA =-40℃ to +125℃	

Symbol	Parameter	Test Conditions		Min	Max	Units
I_{CCR}	Supply Current (Read Mode)	Read, SO open	2.8 V < VCC < 5.5 V	-	3	mA
I_{CCW}	Supply Current (Write Mode)	Write, $\overline{CS}$ = VCC	2.8 V < VCC < 5.5 V	-	3	mA
I_{SB1} (Note 5)	Standby Current	V_{IN} = GND or VCC, $\overline{CS}$ = VCC, $\overline{WP}$ = VCC, HOLD = VCC, VCC = 5.5 V		-	5	µA
I_{SB2} (Note 5)	Standby Current	V_{IN} = GND or VCC, $\overline{CS}$ = VCC, $\overline{WP}$ = GND, HOLD = GND, VCC = 5.5 V		-	5	µA
I_L	Input Leakage Current	V_{IN} = GND or VCC		-	± 2	µA
I_{LO}	Output Leakage Current	$\overline{CS}$ = VCC VOUT = GND or VCC		-	± 2	µA
V_{IL1}	Input Low Voltage	VCC ⩾ 2.8V		–0.45	0.3 VCC	V
V_{IH1}	Input High Voltage	VCC ⩾ 2.8 V		0.7 VCC	VCC+1	V
V_{OL1}	Output Low Voltage	VCC ⩾ 2.8 V, I_{OL} = 3.0 mA		-	0.4	V
V_{OH1}	Output High Voltage	VCC ⩾ 2.8 V, I_{OH} = −1.6 mA		0.8 VCC	-	V

Table 10

©2018 Belling All Rights Reserved www.belling.com.cn

A.C. CHARACTERISTICS:
(VCC = 2.8 V to 5.5 V, unless otherwise specified.) (Note 6)

BL25CM1A	TA =-40℃ to +85℃	VCC = +2.8V to +5.5V
BL25CM1AE1	TA =-40℃ to +105℃	
BL25CM1AE0	TA =-40℃ to +125℃	

Symbol	Parameter	VCC = 2.8 V − 5.5 V		Units
		Min	Max	
f_{SCK}	Clock Frequency	DC	5	MHz
t_{SU}	Data Setup Time	20		ns
t_H	Data Hold Time	20		ns
t_{WH}	SCK High Time	75		ns
t_{WL}	SCK Low Time	75		ns
t_{LZ}	HOLD to Output Low Z		50	ns
t_{RI} (Note 7)	Input Rise Time		2	μs
t_{FI} (Note 7)	Input Fall Time		2	μs
t_{HD}	HOLD Setup Time	0		ns
t_{CD}	HOLD Hold Time	10		ns
t_V	Output Valid from Clock Low		75	ns
t_{HO}	Output Hold Time	0		ns
t_{DIS}	Output Disable Time		50	ns
t_{HZ}	HOLD to Output High Z		100	ns
t_{CS}	CS High Time	80		ns
t_{CSS}	CS Setup Time	60		ns
t_{CSH}	CS Hold Time	60		ns
t_{CNS}	CS Inactive Setup Time	60		ns
t_{CNH}	CS Inactive Hold Time	60		ns
t_{WPS}	WP Setup Time	20		ns
t_{WPH}	WP Hold Time	20		ns
t_{WC} (Notes 9, 10)	Write Cycle Time		8	ms

Table 11

Product parametric performance is indicated in the Electrical Characteristics for the listed test conditions, unless otherwise noted. Product performance may not be indicated by the Electrical Characteristics if operated under different conditions.

POWER−UP TIMING (Notes 7, 8):

Symbol	Parameter	Max	Units
t_{PUR}, t_{PUW}	Power−up to Read / Write Operation	0.1	ms

Table 12

©2018 Belling All Rights Reserved www.belling.com.cn

Note:

1. The DC input voltage on any pin should not be lower than −0.5 V or higher than VCC + 0.5 V. During transitions, the voltage on any pin may undershoot to no less than −1.5 V or overshoot to no more than VCC + 1.5 V, for periods of less than 20 ns.
2. Page Mode, VCC = 5 V, 25°C.
3. The device uses ECC (Error Correction Code) logic with 6 ECC bits to correct one bit error in 4 data bytes. Therefore, when a single byte has to be written, 4 bytes (including the ECC bits) are re−programmed. It is recommended to write by multiple of 4 bytes located at addresses 4N, 4(N+1), 4(N+2), 4(N+3), in order to benefit from the maximum number of write cycles.
4. These parameters are tested initially and after a design or process change that affects the parameter according to appropriate AEC−Q100 and JEDEC test methods.
5. When not driven, the $\overline{WP}$ and $\overline{HOLD}$ inputs are pulled up to VCC internally. For noisy environments, when the pin is not used, it is recommended the $\overline{WP}$ and $\overline{HOLD}$ input to be tied to VCC, either directly or through a resistor.
6. AC Test Conditions:
   Input Pulse Voltages: 0.3 VCC to 0.7 VCC
   Input rise and fall times: ≤ 10 ns
   Input and output reference voltages: 0.5 VCC
   Output load: current source I_{OL} max/I_{OH} max; CL = 30 pF
7. This parameter is tested initially and after a design or process change that affects the parameter.
8. t_{PUR} and t_{PUW} are the delays required from the time VCC is stable until the specified operation can e initiated.
9. t_{WC} is the time from the rising edge of $\overline{CS}$ after a valid write sequence to the end of the internal write cycle.

Bus Timing

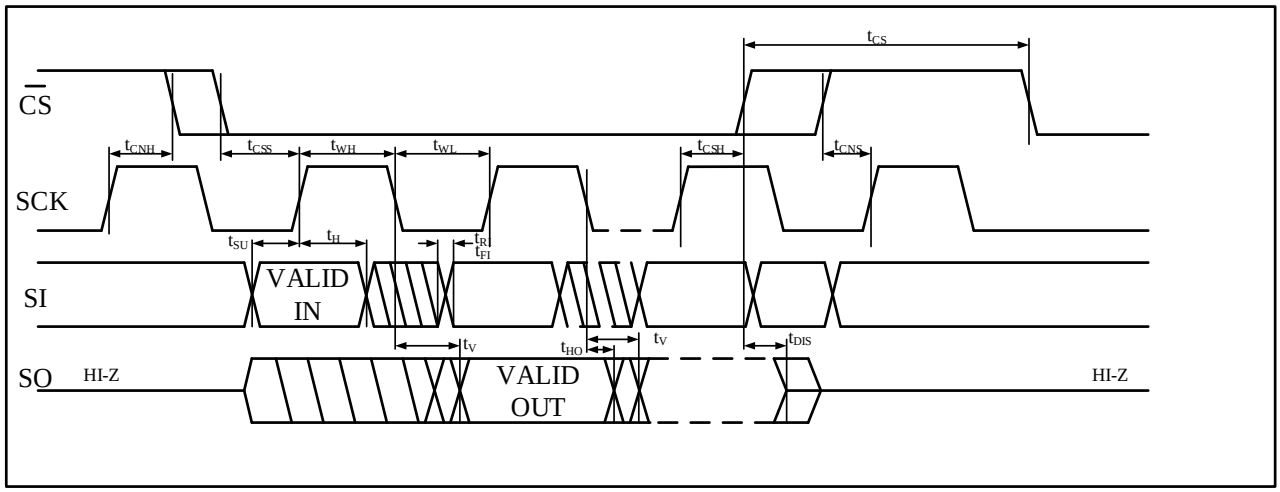

Figure 14

©2018 Belling All Rights Reserved www.belling.com.cn

Package Information

SOP

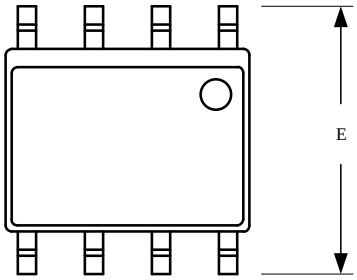

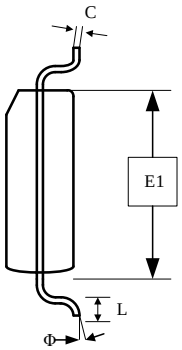

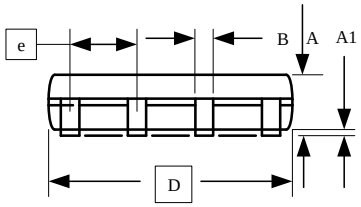

COMMON DIMENSIONS
(Unit of Measure=mm)

SYMBOL	MIN	NOM	MAX
A	1.35	-	1.75
A1	0.10	-	0.23
B	0.39	-	0.48
C	0.21	-	0.26
D	4.70	4.90	5.10
E1	3.70	3.90	4.10
E	5.80	6.00	6.20
e	1.27BSC		
L	0.50	-	0.80
Φ	0″	-	8″

©2018 Belling All Rights Reserved www.belling.com.cn

WLCSP8

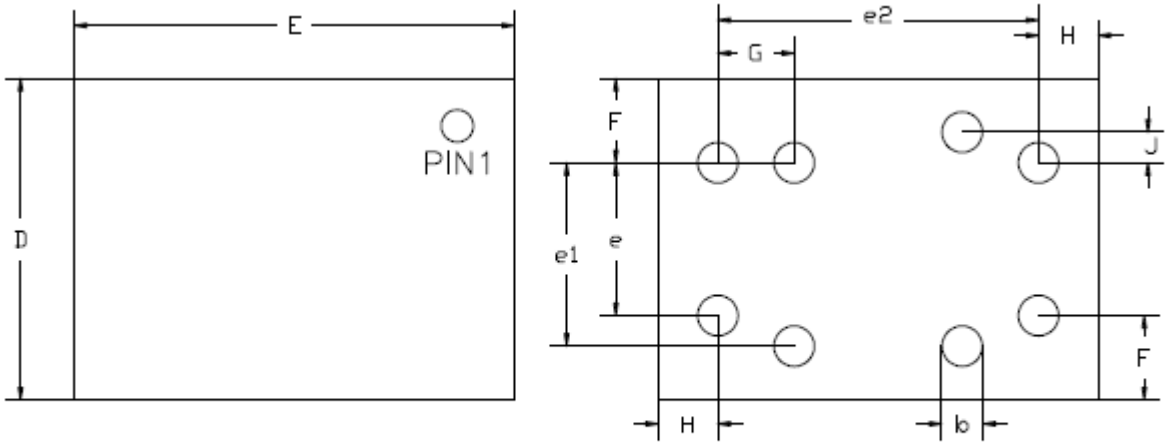

TOP VIEW
(MARK SIDE)

BOTTOM VIEW
(BALL SIDE)

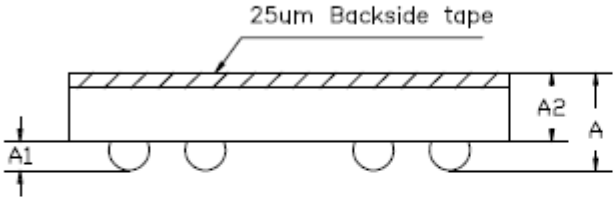

COMMON DIMENSIONS
(UNITS OF MEASURE=MILLIMETER)

SYMBOL	MIN	NOM	MAX
A	0.490	0.540	0.590
A1	0.165	0.190	0.215
A2	0.325	0.350	0.375
D	2.080	2.100	2.120
e1		1.200BSC	
E	2.860	2.880	2.900
e2		2.100BSC	
b	0.240	0.270	0.300
G		0.500BSC	
e		1.000BSC	
H		0.390 REF	
F		0.550 REF	
J		0.200 REF	

©2018 Belling All Rights Reserved www.belling.com.cn

Marking Diagram

SOP

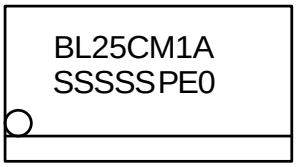

SSSSS	Lot ID
P	P：Cu Wire Version A：Au Wire Version
E0	Blank：-40℃ to +85℃ E1：-40℃ to +105℃ E0：-40℃ to +125℃

WLCSP8

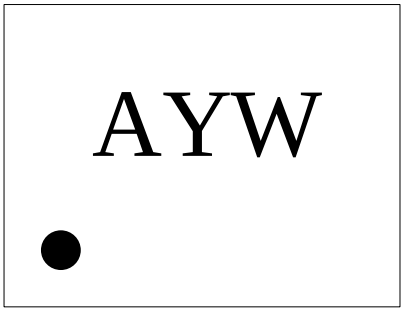

PIN MARK

Y:The last digits of the year

W:week code.

Y	1	…	3	4	5	…	9	0
Year	2021	…	2023	2024	2025	…	2019	2020

W	A	…	Y	Z	a	…	y	z
Week	1	…	25	26	27	…	51	52

©2018 Belling All Rights Reserved www.belling.com.cn

Ordering Information

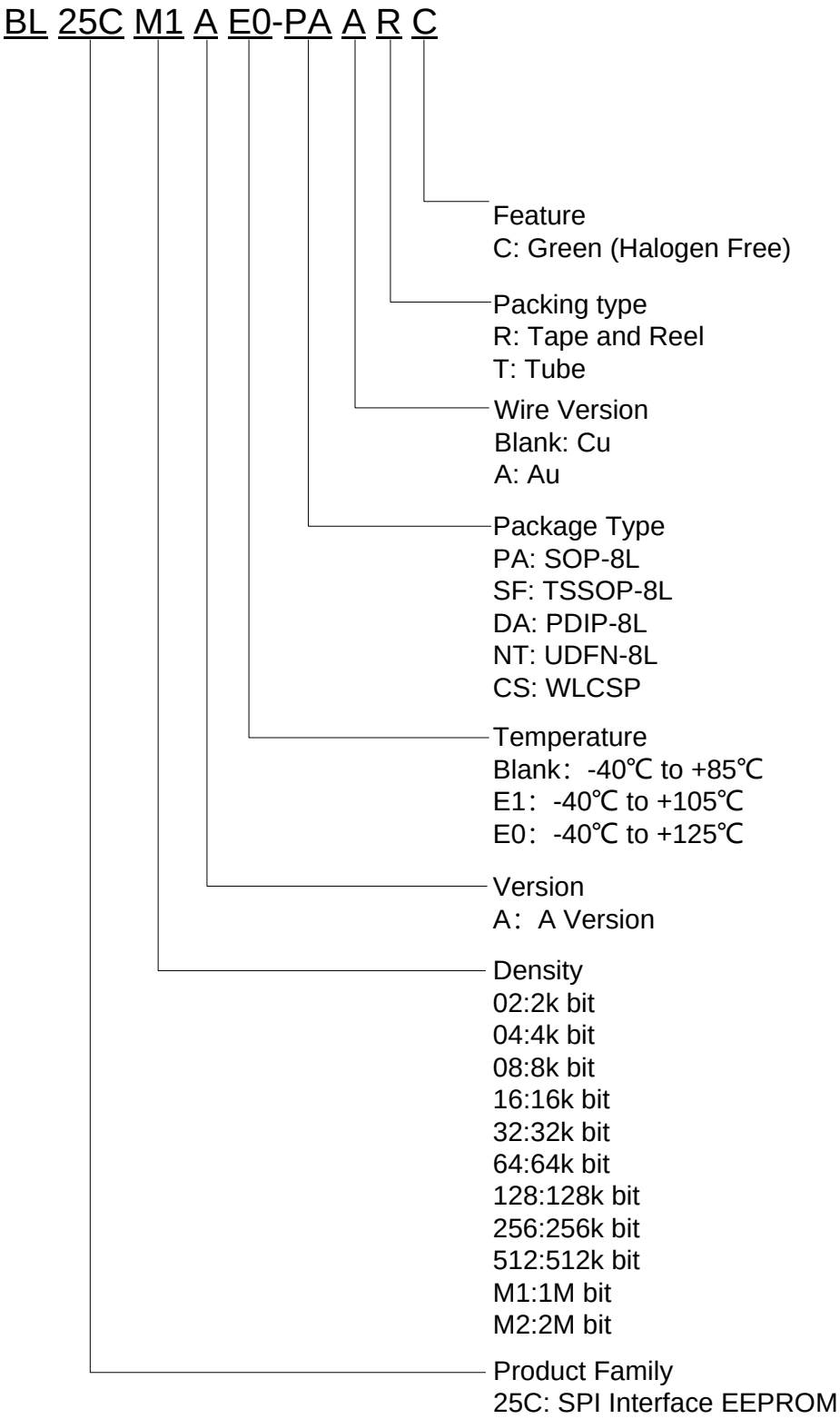

©2018 Belling All Rights Reserved www.belling.com.cn

Device	Package	Shipping (Qty/Packing)
BL25CM1A-CS	WLCSP8, 2.130*2.910 (Pb-Free/Halogen Free)	3000/Tape &Reel

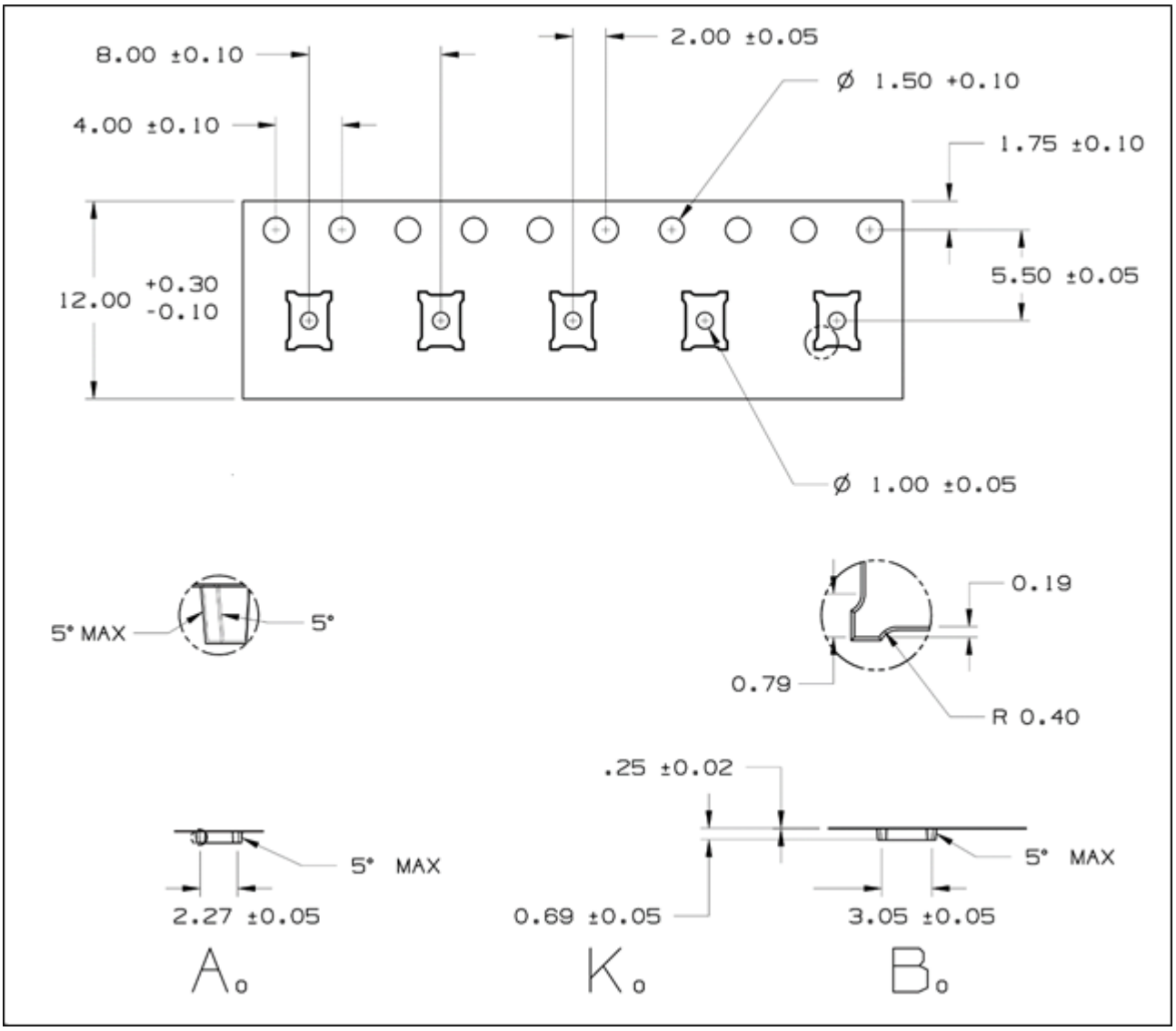

©2018 Belling All Rights Reserved www.belling.com.cn

Revision history

Version 1.00 BL25CM1A
Initial version
Version 1.01 BL25CM1A
Modify the supply voltage from 2.8-5.5 V to 2.0-5.5 V
Version 1.02 BL25CM1A
Remove TSSOP Package Information Update Identification Page Information
Version 1.03 BL25CM1A
Update WLCSP8 Package Information Update the supply voltage from 2.0-5.5 V to 2.8-5.5 V
Version 1.04 BL25CM1A
Update write cycle time to 8ms
Version 1.05 BL25CM1A
Correct the error of figure 11.
Version 1.06 BL25CM1A
Update Operating Ambient Temperature Range Information.
Version 1.07 BL25CM1A
Added Au wire version.

©2018 Belling All Rights Reserved www.belling.com.cn