Features

- Compatible with SMBus serial interface:
  - Up to 400 KHz transfer rate
- Memory array:
  - 2 Kbits organized as two 128-byte blocks
- Software data protection for lower 128-byte block
- Write:
  - Byte Write within 3 ms
  - 16 bytes Page Write within 3 ms
- Schmitt Trigger, Filtered Inputs for Noise Suppression
- Single supply voltage:
  - 1.7 V to 3.6 V
- High-reliability
  - Endurance: 1 Million Write Cycles
  - Data Retention: 100 Years
- Enhanced ESD/latch-up protection
  - HBM 6000V

Description

- The BL34C02A is a 256-byte EEPROM device designed to operate the I2C Bus in the 1.7 V-3.6 V voltage range, with a maximum of 400 KHz transfer rate in the 1.7 V – 3.6 V voltage range。
- Locking the lower 128-byte block may be accomplished using a software write protection mechanism in conjunction with a high input voltage V_{HV} on input A0.

Pin Configuration

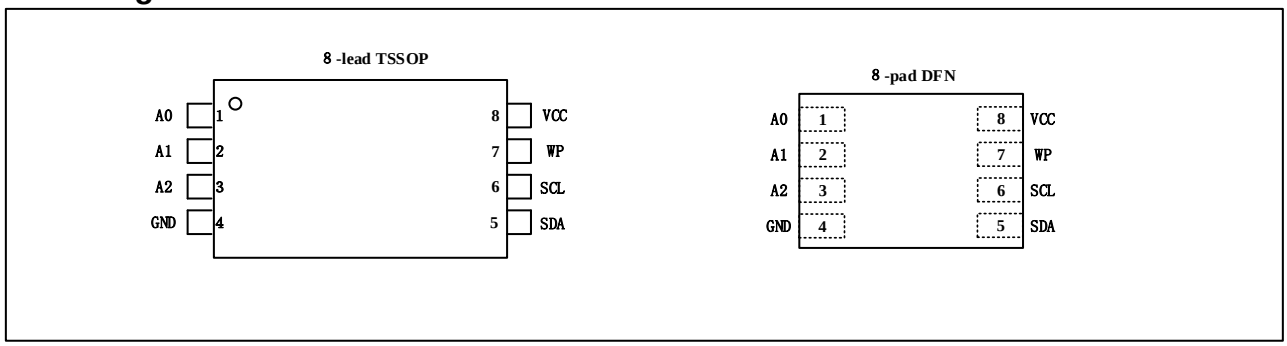

©2017 Belling All Rights Reserved www.belling.com.cn

Pin Descriptions

Pin Name	Type	Functions
A0-A2	I	Address Inputs
SDA	I/O	Serial Data
SCL	I	Serial Clock Input
WP	I	Write Protect
GND	P	Ground
V_{CC}	P	Power Supply

Table 1

Block Diagram

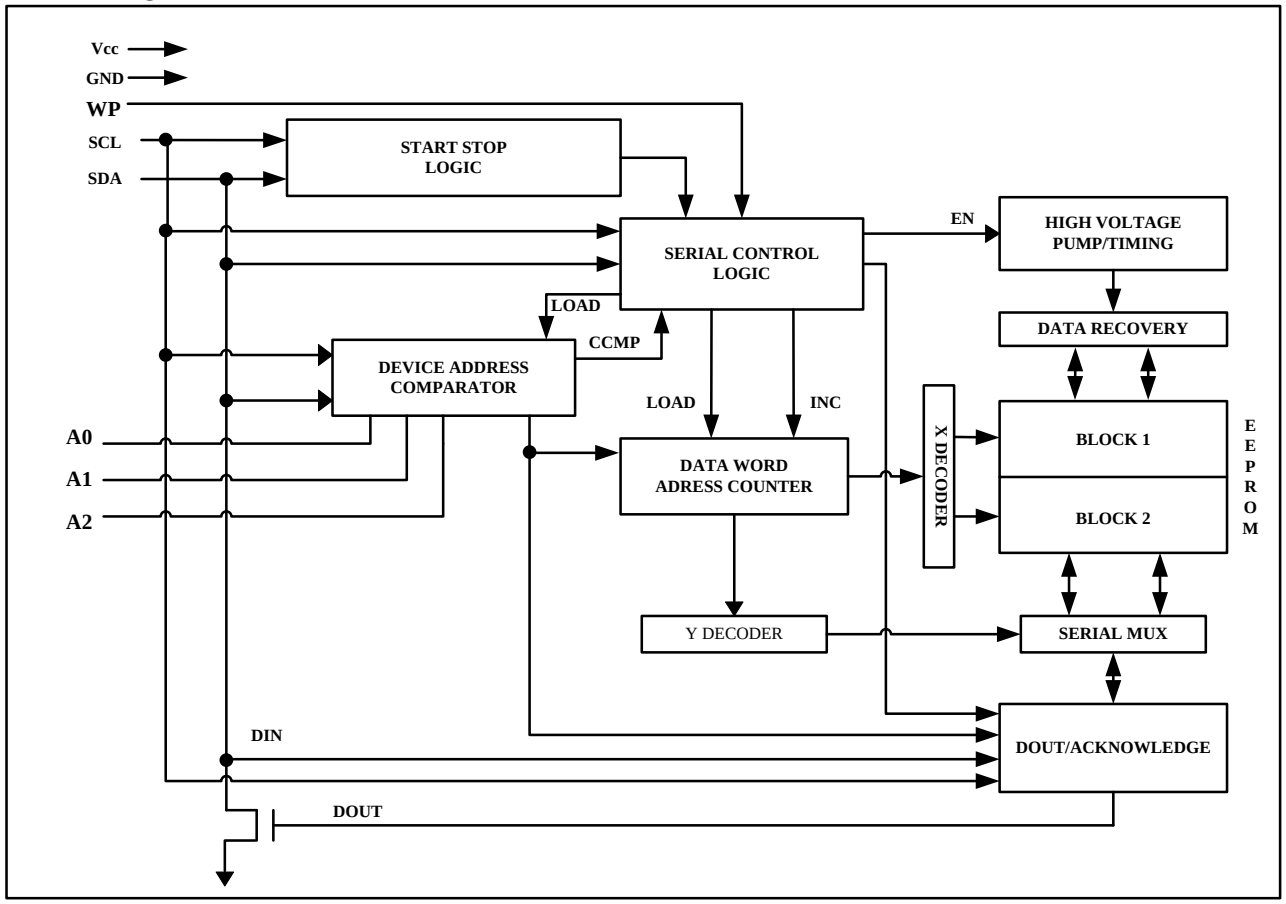

Figure 1

DEVICE/PAGE ADDRESSES (A2, A1 and A0): The A2, A1 and A0 pins are device address inputs that are hard wire for the BL34C02A. Eight 2K devices may be addressed on a single bus system (device addressing is discussed in detail under the Device Addressing section).

The A0 input is used to detect the V_{HV} voltage, when decoding an SWP or CWP instruction.

SERIAL DATA (SDA): The SDA pin is bi-directional for serial data transfer. This pin is open-drain driven and may be wire-ORed with any number of other open-drain or open- collector devices.

SERIAL CLOCK (SCL): The SCL input is used to positive edge clock data into each EEPROM device and negative edge clock data out of each device.

WRITE PROTECT (WP): The BL34C02A has a Write Protect pin that provides hardware data protection. The Write Protect pin allows normal read/write operations when connected to ground (GND). When the Write Protection pin is connected to Vcc, the write protection feature is enabled.

©2017 Belling All Rights Reserved www.belling.com.cn

Functional Description

1. Memory addressing

To start communication between the bus master and the slave device, the bus master must initiate a Start condition. Following this, the bus master sends the device select code, shown in **Table 2** (on Serial Data (SDA), most significant bit first).

The device select code consists of a 4-bit device type identifier, and a 3-bit Chip Enable “Address” (A2, A1, A0). To address the memory array, the 4-bit device type identifier is 1010b; to access the write-protection settings, it is 0110b.

	Chip Enable signals			Device type identifier				Chip Enable bits			RW
				Bit7	Bit6	Bit5	Bit4	Bit3	Bit2	Bit1	Bit0
Memory area selectcode (two arrays)	A2	A1	A0	1	0	1	0	A2	A1	A0	RW
Set write protection(SWP)	VSS	VSS	VHV	0	1	1	0	0	0	1	0
Clear write protection(CWP)	VSS	VCC	VHV					0	1	1	0
Permanently set write protection (PSWP)	A2	A1	A0					A2	A1	A0	0
Read SWP	VSS	VSS	VHV					0	0	1	1
Read CWP	VSS	VCC	VHV					0	1	1	1
Read PSWP	A2	A1	A0					A2	A1	A0	1

Table 2

Up to eight memory devices can be connected on a single serial bus. Each one is given a unique 3-bit code on the slave address (A2, A1, A0) inputs. When the device select code is received, the device only responds if the slave address is the same as the value on the slave address (A2, A1, A0) inputs.

The 8th bit is the Read/Write bit (RW). This bit is set to 1 for Read and 0 for Write operations.
If a match occurs on the device select code, the corresponding device gives an acknowledgment on Serial Data (SDA) during the 9th bit time. If the device does not match the device select code, it deselects itself from the bus, and goes into Standby mode.

©2017 Belling All Rights Reserved www.belling.com.cn

2. Device Operation

CLOCK and DATA TRANSITIONS: The SDA pin is normally pulled high with an external device. Data on the SDA pin may change only during SCL low time periods (see **Figure 2**). Data changes during SCL high periods will indicate a start or stop condition as defined below.

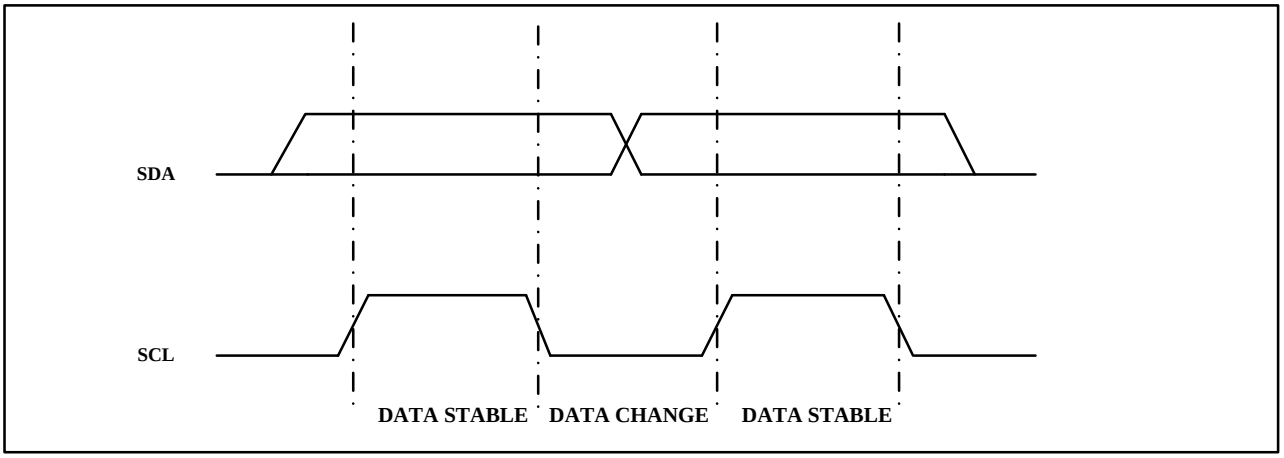

Figure 2. Data Validity

START CONDITION: A high-to-low transition of SDA with SCL high is a start condition which must precede any other command (see **Figure 3**).

STOP CONDITION: A low-to-high transition of SDA with SCL high is a stop condition. After a read sequence, the stop command will place the EEPROM in a standby power mode (see **Figure 3**).

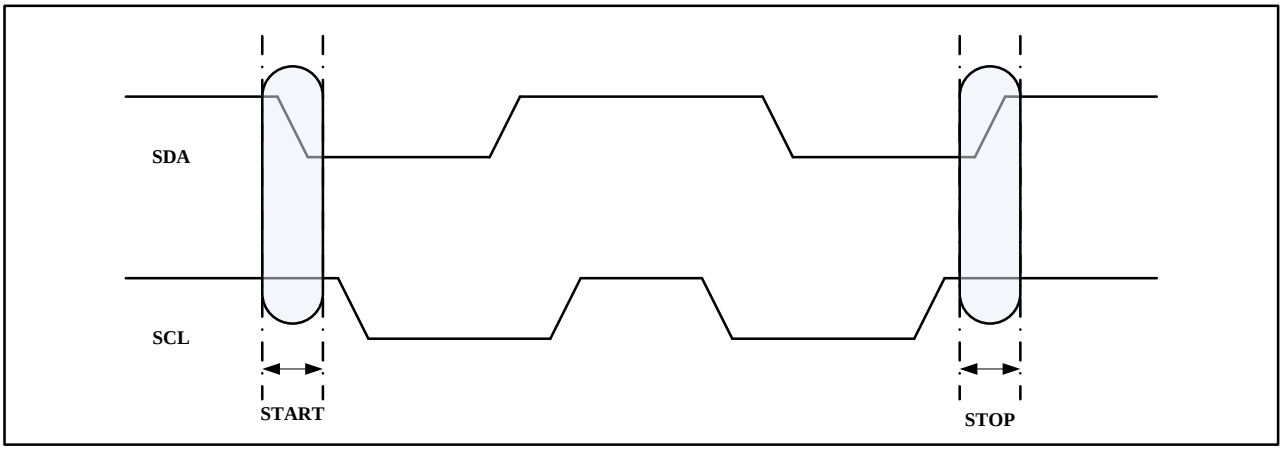

Figure 3. Start and Stop Definition

©2017 Belling All Rights Reserved www.belling.com.cn

ACKNOWLEDGE: All addresses and data words are serially transmitted to and from the EEPROM in 8-bit words. The EEPROM sends a "0" to acknowledge that it has received each word. This happens during the ninth clock cycle.

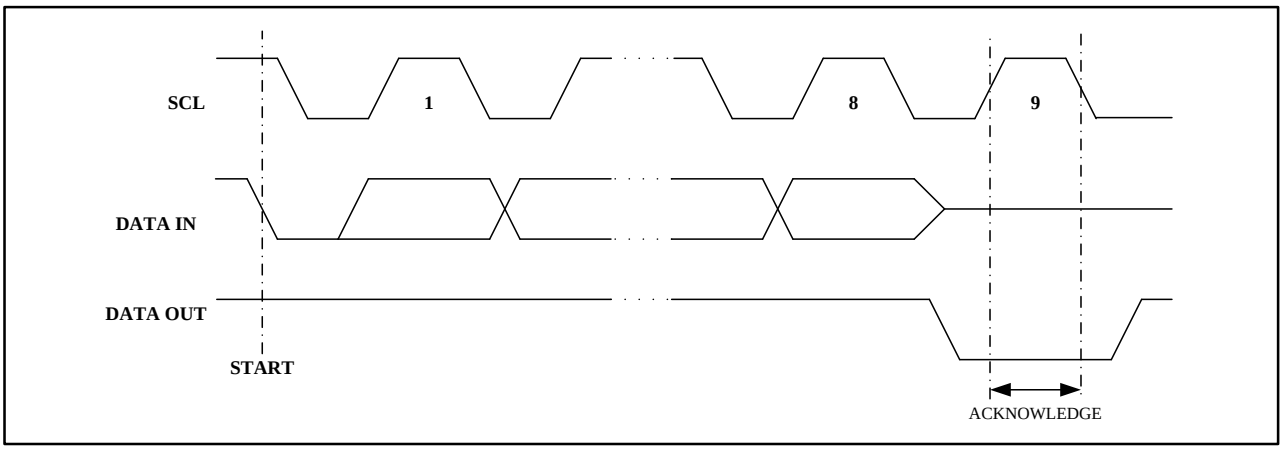

Figure 4. Output Acknowledge

STANDBY MODE: The BL34C02A features a low-power standby mode which is enabled: (a) upon power-up and (b) after the receipt of the STOP bit and the completion of any internal operations.

MEMORY RESET: After an interruption in protocol, power loss or system reset, any two-wire part can be reset by following these steps:

1. Clock up to 9 cycles.

2. Look for SDA high in each cycle while SCL is high.

3. Create a start condition.

DATA SECURITY: The BL34C02A has a hardware data protection scheme that allows the user to write protect the entire memory when the WP pin is at V_{CC}.

©2017 Belling All Rights Reserved www.belling.com.cn

3. Write Operations

If the addressed location is hardware write-protected, the device replies to the data byte with NoAck, and the location is not modified.

BYTE WRITE: A write operation requires an 8-bit data word address following the device address word and acknowledgment. Upon receipt of this address, the EEPROM will again respond with a "0" and then clock in the first 8-bit data word. Following receipt of the 8-bit data word, the EEPROM will output a "0" and the addressing device, such as a microcontroller, must terminate the write sequence with a stop condition. At this time the EEPROM enters an internally timed write cycle, t_{WR}, to the nonvolatile memory. All inputs are disabled during this write cycle and the EEPROM will not respond until the write is complete (**Figure 5**).

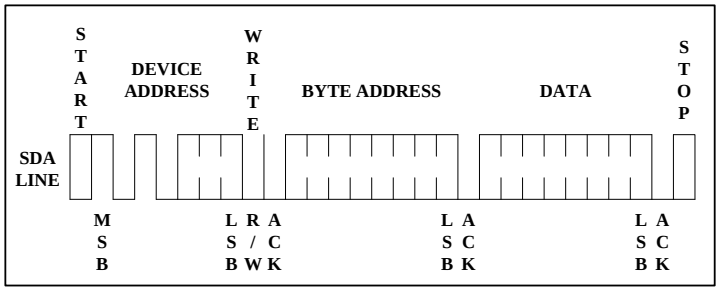

Figure 5. Byte Write

If the addressed location is hardware write-protected, the device replies to the data byte with NoAck, and the location is not modified.

PAGE WRITE: The Page write mode allows up to 16 bytes to be written in a single Write cycle, provided that they are all located in the same page in the memory. A write operation requires an 8-bit data word address following the device address word and acknowledgment. Upon receipt of this address, the EEPROM will again respond with a "0" and then clock in the first 8-bit data word. Following receipt of the 8-bit data word, the EEPROM will output a "0" and the addressing device, such as a microcontroller, must terminate the write sequence with a stop condition. At this time the EEPROM enters an internally timed write cycle, t_{WR}, to the nonvolatile memory. All inputs are disabled during this write cycle and the EEPROM will not respond until the write is complete (see **Figure 6**).

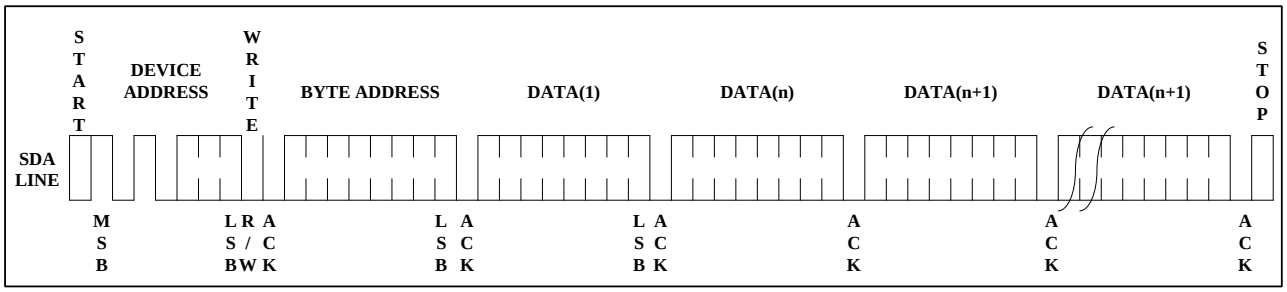

Figure 6. Page Write

The data word address lower five bits are internally incremented following the receipt of each data word. The higher data word address bits are not incremented, retaining the memory page row location. When the word address, internally generated, reaches the page boundary, the following byte is placed at the beginning of the same page. If more than 16 data words are transmitted to the EEPROM, the data word address will "roll over" and previous data will be overwritten.

If the addressed location is hardware write-protected, the device replies to the data byte with NoAck, and the location is not modified.

ACKNOWLEDGE POLLING: Once the internally timed write cycle has started and the EEPROM inputs are disabled, acknowledge polling can be initiated. This involves sending a start condition followed by the device address word. The read/write bit is representative of the operation desired. Only if the internal write cycle has completed will the EEPROM respond with a "0", allowing the read or write sequence to continue.

©2017 Belling All Rights Reserved www.belling.com.cn

4. Read Operations

Read operations are initiated the same way as write operations with the exception that the read/write select bit in the device address word is set to "1". There are three read operations: current address read, random address read and sequential read.

CURRENT ADDRESS READ: The internal data word address counter maintains the last address accessed during the last read or write operation, incremented by one. This address stays valid between operations as long as the chip power is maintained. The address "roll over" during read is from the last byte of the last memory page to the first byte of the first page. The address "roll over" during write is from the last byte of the current page to the first byte of the same page. Once the device address with the read/write select bit set to "1" is clocked in and acknowledged by the EEPROM, the current address data word is serially clocked out. The microcontroller does not respond with an input "0" but does generate a following stop condition (see **Figure 7**).

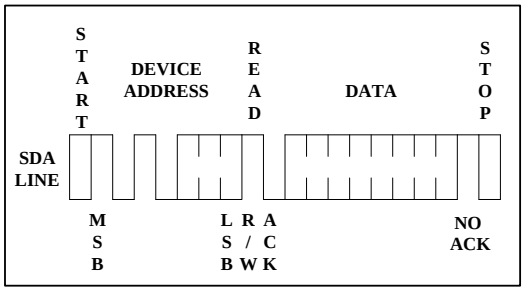

Figure 7. Current Address Read

RANDOM READ: A random read requires a "dummy" byte write sequence to load in the data word address. Once the device address word and data word address are clocked in and acknowledged by the EEPROM, the microcontroller must generate another start condition. The microcontroller now initiates a current address read by sending a device address with the read/write select bit high. The EEPROM acknowledges the device address and serially clocks out the data word. The microcontroller does not respond with a "0" but does generate a following stop condition (see **Figure 8**)

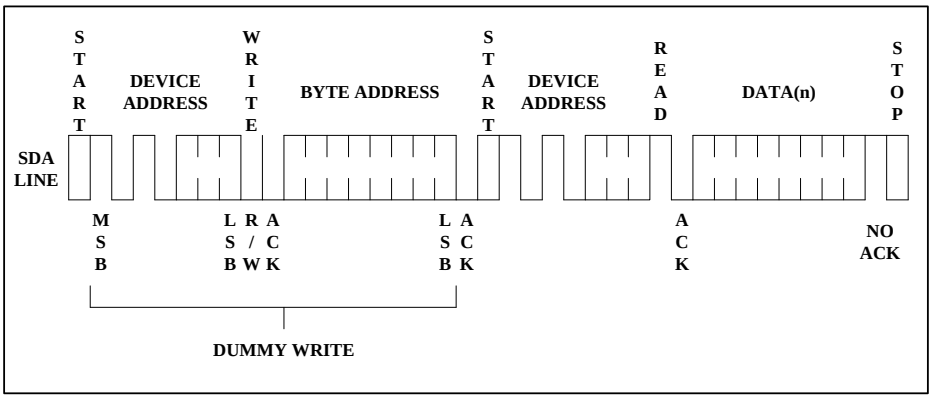

Figure 8. Random Read

©2017 Belling All Rights Reserved www.belling.com.cn

SEQUENTIAL READ: Sequential reads are initiated by either a current address read or a random address read. After the microcontroller receives a data word, it responds with an acknowledge. As long as the EEPROM receives an acknowledge, it will continue to increment the data word address and serially clock out sequential data words. When the memory address limit is reached, the data word address will "roll over" and the sequential read will continue. The sequential read operation is terminated when the microcontroller does not respond with a "0" but does generate a following stop condition (see **Figure 9**).

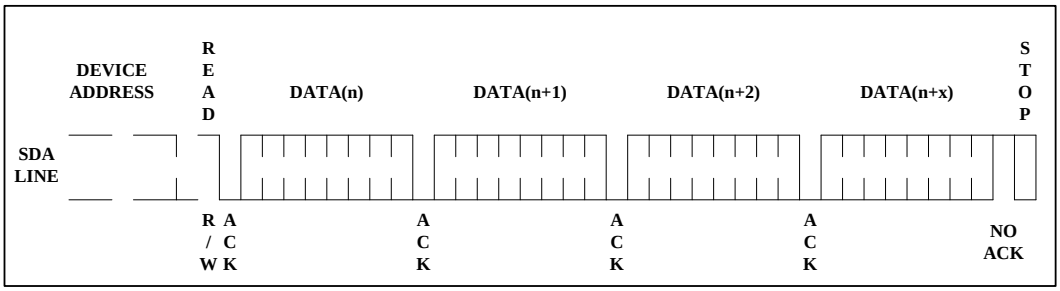

Figure 9. Sequential Read

©2017 Belling All Rights Reserved www.belling.com.cn

5. Setting the write protection

The BL34C02A has a hardware write-protection feature, using the Write Protect (WP) signal. This signal can be driven high or low, and must be held constant for the whole instruction sequence. When Write Protect (WP) is held high, the whole memory array (addresses 00h to FFh) is write protected. When Write Protect (WP) is held low, the write protection of the memory array is dependent on whether software write-protection has been set.

Software write-protection allows the bottom half of the memory area (addresses 00h to 7Fh) to be write protected irrespective of subsequent states of the Write Protect (WP) signal.

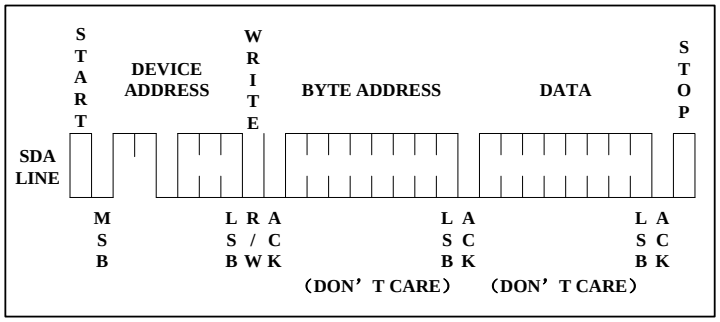

Figure 10. Setting the write protection (WP = 0)

Software write-protection is handled by three instructions:

- SWP: Set Write Protection
- CWP: Clear Write Protection
- PSWP: Permanently Set Write Protection

The level of write-protection (set or cleared) that has been defined using these instructions, remains defined even after a power cycle.

6. SWP and CWP

If the software write-protection has been set with the SWP instruction, it can be cleared again with a CWP instruction.

The two instructions (SWP and CWP) have the same format as a Byte Write instruction, but with a different device type identifier (as shown in Table 2). Like the Byte Write instruction, it is followed by an address byte and a data byte, but in this case the contents are all “Don’t Care” (Figure 7). Another difference is that the voltage, VHV, must be applied on the A0 pin, and specific logical levels must be applied on the other two (A1 and A2, as shown in Table 2).

7. PSWP

If the software write-protection has been set with the PSWP instruction, the first 128 bytes of the memory are permanently write-protected. This write-protection cannot be cleared by any instruction, or by power-cycling the device, and regardless the state of Write Protect (WP). Also, once the PSWP instruction has been successfully executed, the BL34C02A no longer acknowledges any instruction (with a device type identifier of 0110) to access the write-protection settings.

©2017 Belling All Rights Reserved www.belling.com.cn

Use within a DDR1/DDR2/DDR3 DRAM module

In the application, the BL34C02A is soldered directly in the printed circuit module. The three Chip Enable inputs (A0, A1, A2) must be connected to VSS or VCC directly (that is without using a pull-up or pull-down resistor) through the DIMM socket (see Table 4). The pull-up resistors needed for normal behavior of the I2C bus are connected on the I2C bus of the mother-board.

The Write Protect (WP) of the BL34C02A can be left unconnected. However, connecting it to VSS is recommended, to maintain full read and write access.

DIMM position	A2	A1	A0
0	V_{SS}	V_{SS}	V_{SS}
1	V_{SS}	V_{SS}	V_{CC}
2	V_{SS}	V_{CC}	V_{SS}
3	V_{SS}	V_{CC}	V_{CC}
4	V_{CC}	V_{SS}	V_{SS}
5	V_{CC}	V_{SS}	V_{CC}
6	V_{CC}	V_{CC}	V_{SS}
7	V_{CC}	V_{CC}	V_{CC}

Table3

1. Programming the BL34C02A

The situations in which the BL34C02A is programmed can be considered under two headings:

- when the DDR DRAM is isolated (not inserted on the PCB motherboard)
- when the DDR DRAM is inserted on the PCB motherboard

Isolated DRAM module: With specific programming equipment, it is possible to define the BL34C02A content, using Byte and Page Write instructions, and its write-protection using the SWP and CWP instructions. To issue the SWP and CWP instructions, the DRAM module must be inserted in a specific slot where the A0 signal can be driven to VHV during the whole instruction. This programming step is mainly intended for use by DRAM module makers, whose end application manufacturers will want to clear this write-protection with the CWP on their own specific programming equipment, to modify the lower 128 bytes, and finally to set permanently the write-protection with the PSWP instruction.

DRAM module inserted in the application motherboard: As the final application cannot drive the A0 pin to VHV, the only possible action is to freeze the write-protection with the PSWP instruction. Table 4 and Table 5 show how the Ack bits can be used to identify the write-protection status.

©2017 Belling All Rights Reserved www.belling.com.cn

Status	WP Input	Instruction	Ack	Address	Ack	Data byte	Ack	Write cycle (t_W)
Permanently protected	X	PSWP, SWP or CWP	NoAck	Not significant	NoAck	Not significant	NoAck	No
		Page or Byte Write in lower 128 bytes	Ack	Address	Ack	Data	NoAck	No
Protected With SWP	0	SWP	NoAck	Not significant	NoAck	Not significant	NoAck	No
		CWP	Ack	Not significant	Ack	Not significant	Ack	Yes
		PSWP	Ack	Not significant	Ack	Not significant	Ack	Yes
		Page or byte write in protected block	Ack	Address	Ack	Data	NoAck	No
Protected With SWP	1	SWP	NoAck	Not significant	NoAck	Not significant	NoAck	No
		CWP	Ack	Not significant	Ack	Not significant	NoAck	No
		PSWP	Ack	Not significant	Ack	Not significant	NoAck	No
		Page or byte write	Ack	Address	Ack	Data	NoAck	No
Not Protected	0	PSWP, SWP or CWP	Ack	Not significant	Ack	Not significant	Ack	Yes
		Page or byte write	Ack	Address	Ack	Data	Ack	Yes
	1	PSWP, SWP or CWP	Ack	Not significant	Ack	Not significant	Ack	No
		Page or byte write	Ack	Address	Ack	Data	Ack	No

Table4

Status	Instruction	Ack	Address	Ack	Data byte	Ack
Permanently protected	PSWP, SWP or CWP	NoAck	Not significant	NoAck	Not significant	NoAck
Protected with SWP	SWP	NoAck	Not significant	NoAck	Not significant	NoAck
Protected with SWP	CWP	Ack	Not significant	NoAck	Not significant	NoAck
Protected with SWP	PSWP	Ack	Not significant	NoAck	Not significant	NoAck
Not protected	PSWP, SWP or CWP	Ack	Not significant	NoAck	Not significant	NoAck

Table5

©2017 Belling All Rights Reserved www.belling.com.cn

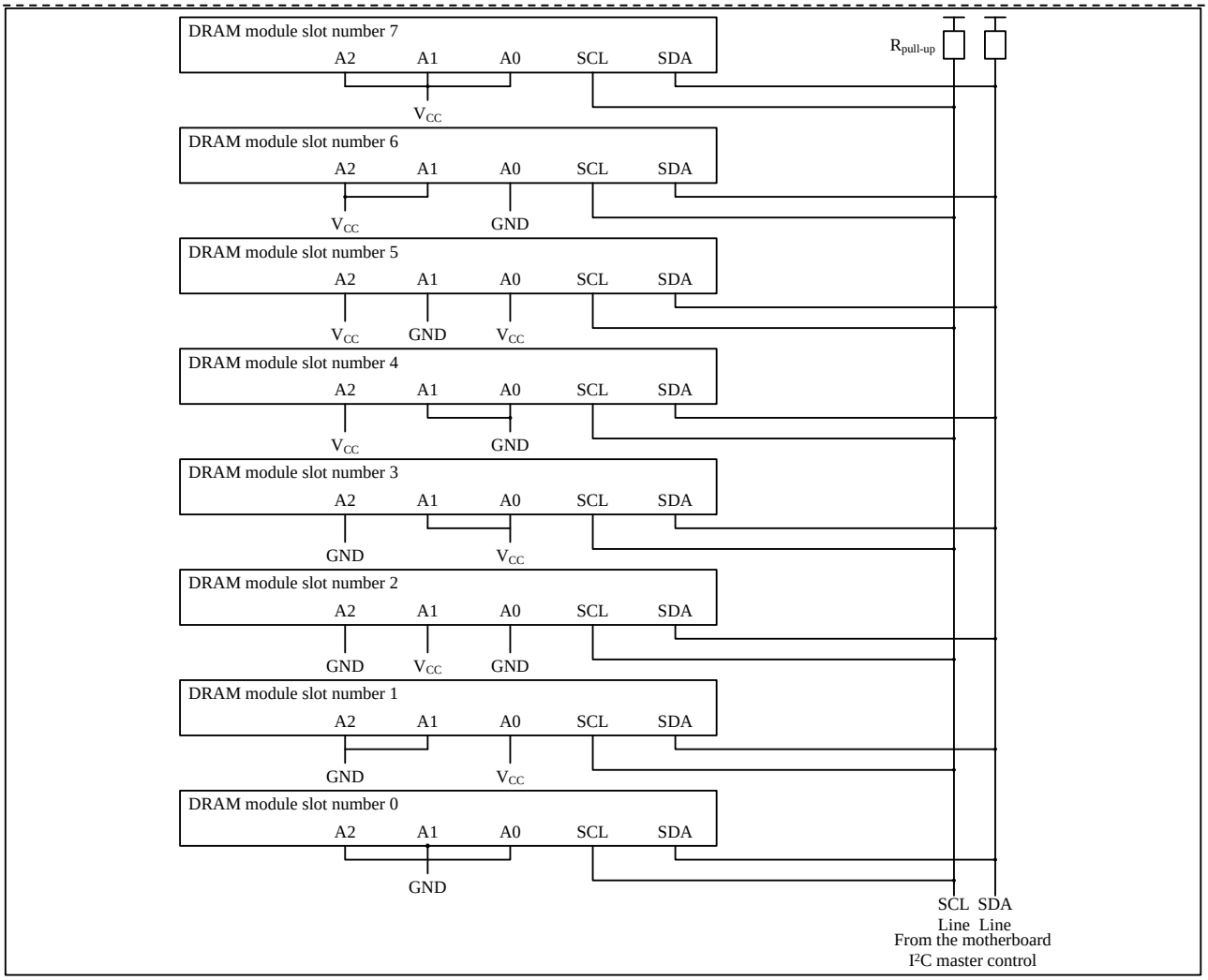

Figure. 11

©2017 Belling All Rights Reserved www.belling.com.cn

Electrical Characteristics

Absolute Maximum Stress Ratings:

- DC Supply Voltage . . . . . -0.5V to +6.5V
- Input / Output Voltage . . . . . GND-0.3V to VCC+0.3V
- Voltage on Pin A0. . . . . -0.5V to +10V
- Operating Ambient Temperature . . . . . -40℃ to +95℃
- Storage Temperature . . . . . .-65℃ to +150℃
- Electrostatic pulse (Human Body model) 6000V

Comments:

Stresses above those listed under "Absolute Maximum Ratings" may cause permanent damage to this device. These are stress ratings only. Functional operation of this device at these or any other conditions above those indicated in the operational sections of this specification is not implied or intended. Exposure to the absolute maximum rating conditions for extended periods may affect device reliability.

©2017 Belling All Rights Reserved www.belling.com.cn

DC Electrical Characteristics

Applicable over recommended operating range from: TA = -40℃ to +85℃, VCC = +1.7V to +3.6V (unless otherwise noted)

Table 6. DC characteristics

Symbol	Parameter	Test condition (in addition to those in Table 8)	Min	Max	Unit
I_{LI}	Input leakage current (SCL,SDA, A0, A1, A2)	V_{IN} = GND or V_{CC}	-	± 2	µA
I_{LO}	Output leakage current	SDA in Hi-Z, external voltage applied on SDA: GND or V_{CC}	-	± 2	µA
I_{CC}	Supply current (read)	f_c = 400 kHz or 1 MHz	-	1	mA
I_{CC0}	Supply current (write)	During t_W, V_{IN} = GND or V_{CC}	-	1 (1)	mA
I_{CC1}	Standby supply current	Device not selected (2), V_{IN} = GND or V_{CC}, $V_{CC} \geqslant$ 2.2 V	-	2	µA
		Device not selected (2), V_{IN} = GND or V_{CC}, V_{CC} < 2.2 V	-	1	µA
V_{IL}	Input low voltage (SCL, SDA, WP)	-	-0.45	0.3 x V_{CC}	V
V_{IH}	Input high voltage (SCL, SDA, WP)	-	0.7 x V_{CC}	V_{CC}+1 V	V
V_{HV}	A0 high voltage detect	V_{CC} < 2.2 V	7	10	V
		$V_{CC} \geqslant$ 2.2 V	V_{CC}+4.8 V	10	V
V_{OL}	Output low voltage	I_{OL} = 0.15 mA	-	0.2	V
		I_{OL} = 3 mA	-	0.4	V

1. The device is not selected after a power-up, after a read command (after the Stop condition), or after the completion of the internal write cycle t_W (t_W is triggered by the correct decoding of a write command).

©2017 Belling All Rights Reserved www.belling.com.cn

Pin Capacitance

Applicable over recommended operating range from TA = 25℃, f = 400kHz, VCC = +1.7V

Parameter	Symbol	Min	Typ	Max	Unit	Condition
Input/Output Capacitance(SDA)	$C_{I/O}$	-	-	8	pF	V_{IO}=0V
Input Capacitance(A0,A1,A2,SCL)	C_{IN}	-	-	6	pF	V_{IN}=0V

AC Electrical Characteristics

Applicable over recommended operating range from TA = -40℃ to +85℃, VCC = +1.7V to +3.6V, CL = 1 TTL Gate and 100 pF (unless otherwise noted)

Table 7. AC characteristics

Symbol		Parameter	Min.	Max.	Unit
f_{SCL}	f_C	Clock frequency	10	400	kHz
t_{HIGH}	t_{CHCL}	Clock pulse width high time	600	-	ns
t_{LOW}	t_{CLCH}	Clock pulse width low time	1300	-	ns
t_F	t_{DL1DL2} (1)	SDA (out) fall time	20	300	ns
t_R	t_{XH1XH2} (2)	Input signal rise time	20	300	ns
t_F	t_{QL1QL2} (2)	Input signal fall time	20	300	ns
$t_{SU:DAT}$	t_{DXCH}	Data in setup time	100	-	ns
$t_{HD:DI}$	t_{CLDX}	Data in hold time	0	-	ns
$t_{HD:DAT}$	t_{CLQX} (3)	Data out hold time	200	900	ns
$t_{SU:STA}$	t_{CHDL} (4)	Start condition setup time	600	-	ns
$t_{HD:STA}$	t_{DLCL}	Stop condition hold time	600	-	ns
$t_{SU:STO}$	t_{CHDH}	Stop condition setup time	600	-	ns
t_{BUF}	t_{DHDL}	Time between Stop Condition and next Start Condition	1300	-	ns
t_W		Write time	-	3	ms

1. Sampled only, not 100% tested.
2. Values recommended by I²C-bus/Fast-Mode specification.
3. To avoid spurious Start and Stop conditions, a minimum delay is placed between SCL=1 and the falling or rising edge of SDA.
4. For a re-Start condition, or following a Write cycle.

©2017 Belling All Rights Reserved www.belling.com.cn

Bus Timing

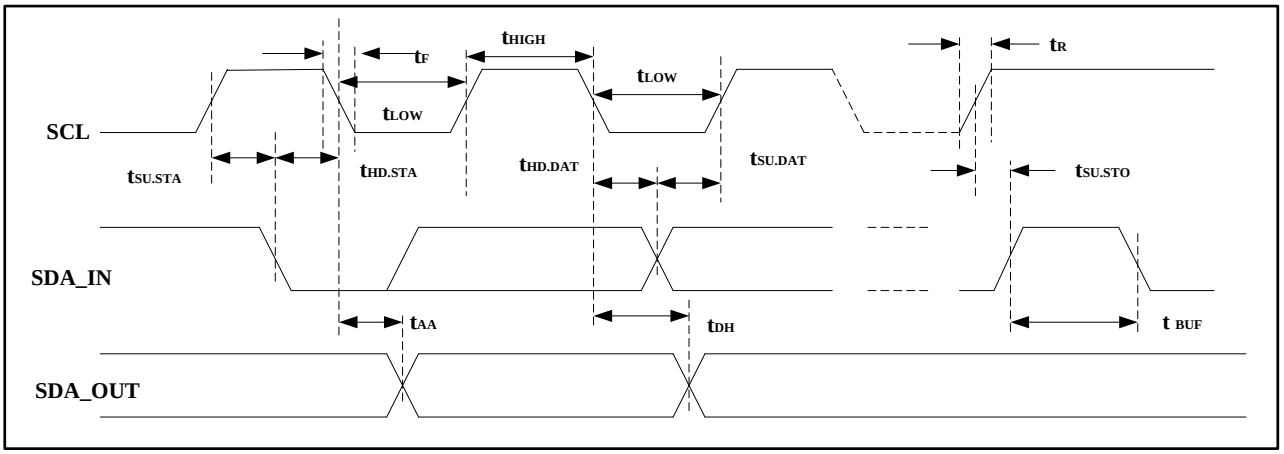

Figure 12. SCL: Serial Clock, SDA: Serial Data I/O

Write Cycle Timing

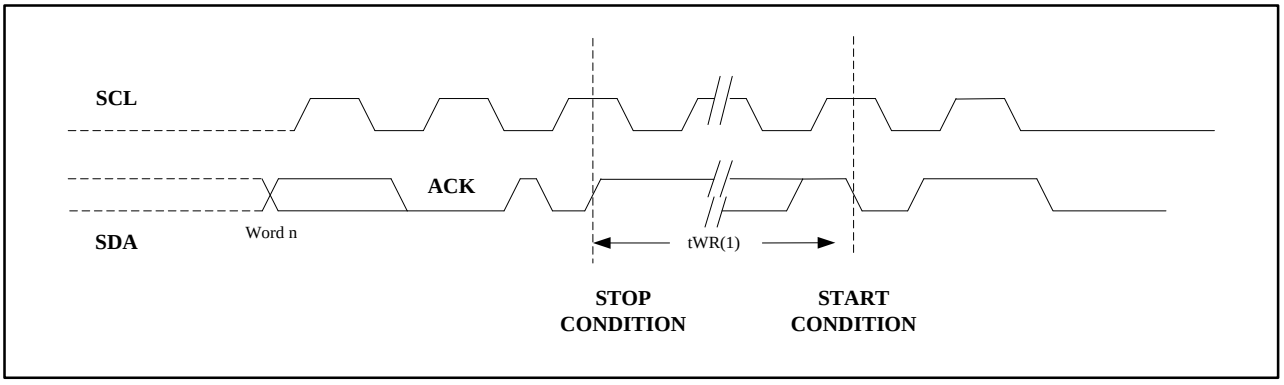

Figure 13. SCL: Serial Clock, SDA: Serial Data I/O

Notes:

The write cycle time t_{WR} is the time from a valid stop condition of a write sequence to the end of the internal clear/write cycle.

©2017 Belling All Rights Reserved www.belling.com.cn

Package Information

TSSOP

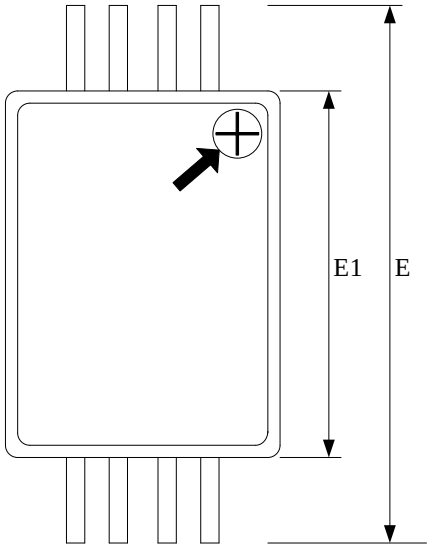

Top View

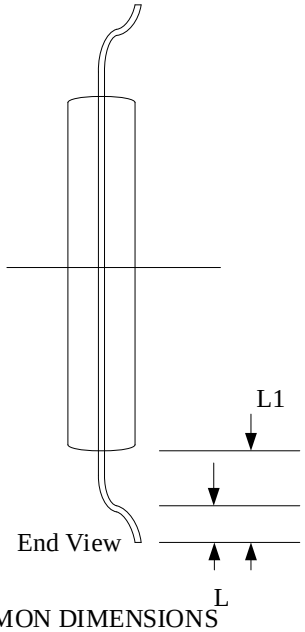

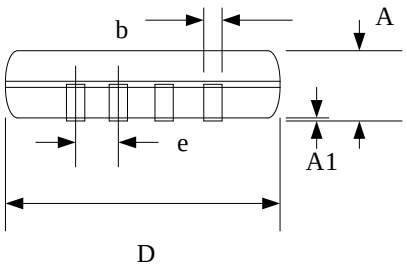

Side View

COMMON DIMENSIONS
Unit of Measure=mm

SYMBOL	MIN	NOM	MAX
D	2.90	3.00	3.10
E	6.20	6.40	6.60
E1	4.30	4.40	4.50
A	-	-	1.20
A1	0.05	-	0.15
b	0.21	-	0.30
e	0.65BSC		
L	0.45	0.60	0.75
L1	1.00REF		

©2017 Belling All Rights Reserved www.belling.com.cn

UDFN

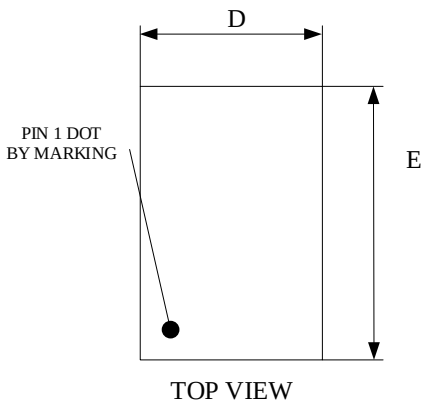

TOP VIEW

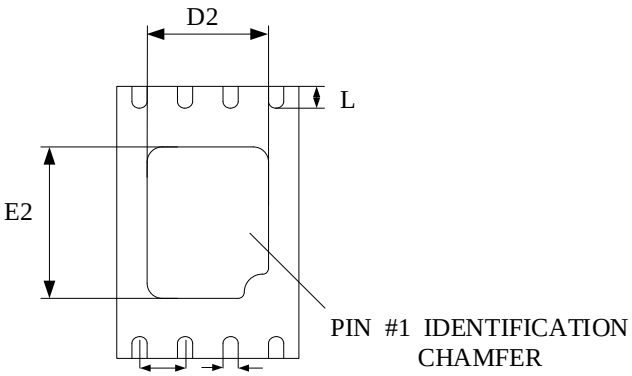

BOTTOM VIEW

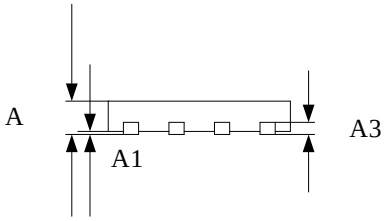

SIDE VIEW

COMMON DIMENSION(MM)			
PKG	UT:ULTRA THIN		
REF	MIN	NOM	MAX
A	0.50	0.55	0.60
A1	0.00	-	0.05
A3	0.15REF		
D	1.95	2.00	2.05
E	2.95	3.00	3.05
b	0.20	0.25	0.30
L	0.20	0.30	0.40
D2	1.25	1.40	1.50
E2	1.15	1.30	1.40
e	0.50BSC		

©2017 Belling All Rights Reserved www.belling.com.cn

Ordering Information

BL 34C 02 A-PA R C

- Feature
  S: Standard (default, Pb Free RoHS Std.)
  C: Green (Halogen Free)
- Packing type
  R: Tape and Reel
- Package Type
  SF: TSSOP-8L
  NT: UDFN-8L
- Version
  A：A Version
- Density
  02:2k bit
- Product Family
  34:Serial Presence Detect (SPD) EEPROM

Device	Package	Shipping(Qty/Packing)
BL34C02A	TSSOP8L	3000/Tape &Reel
BL34C02A	UDFN	3000/Tape &Reel

©2017 Belling All Rights Reserved www.belling.com.cn

Revision history

Version 1.00 BL34C02A	
Initial version	
Version 1.01 BL34C02A	
Modify DC/AC Electrical Characteristics	
Version 1.02 BL34C02A	**6/10/2019**
Update the Package Information	

©2017 Belling All Rights Reserved www.belling.com.cn