# Automotive Fully Integrated H-bridge Motor Driver

## Features

- AEC-Q100 qualified
  - Device ambient temperature: -40°C ≤ $T_A$ ≤ 125°C
  - Device junction temperature: -40°C ≤ $T_J$ ≤ 150°C
- Operating voltage: 4 to 28 V, 40 V abs. max
- Output current: 12 A
- $R_{DS(on)}$ : 100 mΩ typ per half bridge
- 3 V CMOS-compatible inputs
- PWM operation up to 20 kHz
- Very low standby current, 1.5 µA max at 25°C
- Protections:
  - Cross-conduction protection
  - Overvoltage clamp
  - Undervoltage shutdown
  - Current limitation
  - Power limitation
  - Thermal shutdown
  - Output short to ground and short to $V_{CC}$
  - Loss of ground and loss of $V_{CC}$
- CS diagnostic functions:
  - Analog motor current feedback
  - OFF-state open load detection
  - Output short to ground detection
  - Output short to VCC detection
  - Thermal shutdown indication
- Flexibility of use as full bridge, dual half bridge and multi-motor driving configuration

## Package Information

| Part Number | Package |
|---|---|
| DIA57100 | SOP16 |

## Applications

- Automotive brushed DC motors and solenoids
- Zone control unit (ZCU)
- Hidden door handles
- Side mirror modules
- Electric spoiler adjustment
- Door lock, child lock, tail gate lock
- On board charger

## Description

The device is a fully integrated H-bridge motor driver intended for a wide range of automotive applications. The design of monolithic die in a power package offers better robustness and higher reliability.

The direction and brake operation of the motor are simply controlled by applying digital signals to the $IN_A$ and $IN_B$.

The CS pin allows to monitor the motor current by delivering a current proportional to the motor current value, and it also develops a voltage flag for a failure on the relevant output in the ON state as well as the OFF state. The independent PWM pin, up to 20 kHz, allows to control the speed of the motor easily in all possible conditions. In all cases, a low level state on the PWM pin turns off both the LSA and LSB switches.

## Simplified Schematic

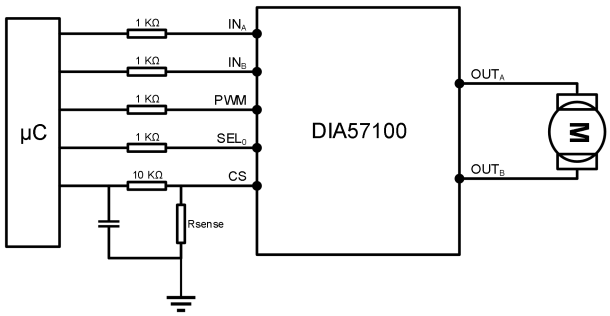



© 2023 DIOO MICROCIRCUITS CO., LTD.

## Ordering Information

| Ordering Part No. | Top Marking | MSL | RoHS | $T_A$ | Package | |
|---|---|---|---|---|---|---|
| DIA57100SO16 | DIAEGKV<br>YYWW<br>XZ | 3 | Green | -40 to 125°C | SOP16 | Tape & Reel, 2500 |

If you encounter any issue in the process of using the device, please contact our customer service at marketing@dioo.com or phone us at (+86)-21-62116882. If you have any improvement suggestions regarding the datasheet, we encourage you to contact our technical writing team at docs@dioo.com. Your feedback is invaluable for us to provide a better user experience.


© 2023 DIOO MICROCIRCUITS CO., LTD.

# Table of Contents

1. Pin Assignment and Functions ..... 1
2. Absolute Maximum Ratings ..... 2
3. Recommend Operating Conditions ..... 2
4. ESD Ratings ..... 3
5. Electrical Characteristics ..... 3
    5.1. General characteristics ..... 3
    5.2. Switching ..... 5
    5.3. Protections and diagnostics ..... 5
    5.4. Current sense ..... 6
    5.5. Detailed figures ..... 8
6. Typical Characteristics ..... 11
7. Truth Tables ..... 13
8. Waveforms ..... 15
9. Block Diagram ..... 16
10. Application Information ..... 17
    10.1. Reverse battery protection ..... 17
    10.2. OFF-state open-load detection ..... 17
    10.3. Application examples ..... 18
    10.4. Device configurations ..... 19
11. Physical Dimensions ..... 20
    11.1. SOP16 ..... 20

 © 2023 DIOO MICROCIRCUITS CO., LTD.

# List of Figures

Figure 1. SOP16 (Top view) ..... 1
Figure 2. Current and voltage conventions ..... 8
Figure 3. $t_{DSTKON}$ ..... 8
Figure 4. Definition of the low-side switching times ..... 8
Figure 5. Definition of the high-side switching times ..... 9
Figure 6. Low-side turn-on delay time ..... 9
Figure 7. Time to shutdown for the low-side driver ..... 9
Figure 8. Input reset time for HSD - fault unlatch ..... 10
Figure 9. Input reset time for LSD - fault unlatch ..... 10
Figure 10. OFF-state diagnostic delay time from rising edge of $V_{OUT}$ ($t_{D_VOL}$) ..... 10
Figure 11. $R_{DS(on)}$ vs. Temperature ..... 11
Figure 12. $I_{SENSE}$ vs. $I_{OUT}$ ..... 11
Figure 13. Protection-output short to GND ..... 11
Figure 14. Protection-output hard short to $V_{CC}$ ..... 11
Figure 15. Protection-output soft short to $V_{CC}$ ..... 11
Figure 16. $OUT_A$ short to $OUT_B$ - LSB ON then HSA switched ON ..... 11
Figure 17. $OUT_A$ short to $OUT_B$ - HSB ON then LSA switched ON ..... 12
Figure 18. Normal operative conditions ..... 15
Figure 19. OUT shorted to ground and short clearing ..... 15
Figure 20. OUT shorted to $V_{CC}$ and short clearing ..... 15
Figure 21. Application schematic with reverse battery protection connected to $V_{batt}$ ..... 18
Figure 22. Application schematic with reverse battery protection connected to GND ..... 18
Figure 23. Half-bridge configuration (case A) ..... 19
Figure 24. Half-bridge configuration (case B) ..... 19

# List of Tables

Table 1. Pin description ..... 1
Table 2. Truth table: operative condition ..... 13
Table 3. Truth table: ON-state fault conditions ..... 13
Table 4. Truth table: OFF-state ..... 14

 © 2023 DIOO MICROCIRCUITS CO., LTD.

# 1. Pin Assignment and Functions

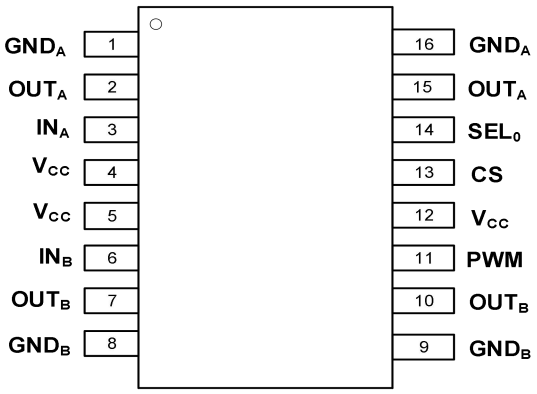


*Figure 1. SOP16 (Top view)*

*Table 1. Pin description*

| Pin No. | Name | I/O | Description |
|---|---|---|---|
| 1, 16 | $GND_A$ | GND | Source of low-side switch A. |
| 2, 15 | $OUT_A$ | O | Source of high-side switch A / drain of low-side switch A. |
| 3 | $IN_A$ | I | Clockwise input. |
| 4, 5, 12 | $V_{CC}$ | Power | Power supply voltage. |
| 6 | $IN_B$ | I | Counter clockwise input. |
| 7, 10 | $OUT_B$ | O | Source of high-side switch B / drain of low-side switch B. |
| 8, 9 | $GND_B$ | GND | Source of low-side switch B. |
| 11 | PWM | I | Voltage controlled input pin with hysteresis, CMOS compatible. Gates of low-side FETS get modulated by the PWM signal during their on phase allowing speed control of the motor. Active high. |
| 13 | CS | O | Multiplexed analog sense output pin. Delivers a current proportional to the motor current. |
| 14 | $SEL_0$ | I | In combination with $IN_A$, $IN_B$, the pin addresses the current-sense information that is available to the microcontroller according to the operative truth table. Active high and compatible with 3 V and 5 V CMOS outputs pin. |


© 2023 DIOO MICROCIRCUITS CO., LTD.

## 2. Absolute Maximum Ratings

Exceeding the maximum ratings listed under Absolute Maximum Ratings when designing is likely to damage the device permanently. Do not design to the maximum limits because long-time exposure to them might impact the device's reliability. The ratings are obtained over an operating free-air temperature range unless otherwise specified.

| Symbol | Parameter | Ratings | Unit |
|---|---|---|---|
| $V_{CC}$ | Supply voltage | 40 | V |
| $-V_{CC}$ | Reverse DC supply voltage | 0.3 | V |
| $I_{max}$ | Maximum output current (continuous) | Internally limited | A |
| $I_R$ | Reverse output current | -15 | A |
| $V_{CCPK}$ | Maximum transient supply voltage | 40 | V |
| $V_{CCJS}$ | Maximum jump-start voltage for single pulse short-circuit protection | 28 | V |
| $I_{IN}$ | Input current ($IN_A$ and $IN_B$ pins) | -1 to 10 | mA |
| $I_{SEL0}$ | $SEL_0$ pin DC input current | -1 to 10 | mA |
| $I_{PWM}$ | PWM input current | -1 to 10 | mA |
| $I_{SENSE}$ | DC output current on the current sense pin ($V_{GND}$ = $V_{CC}$ and $V_{SENSE}$ < 0 V) | 10 | mA |
| $I_{SENSE}$ | DC output current in reverse on the current sense pin ($V_{CC}$ < 0 V) | -18 | mA |
| $T_J$ | Junction operating temperature | -40 to 150 | °C |
| $T_{STG}$ | Storage temperature | -55 to 150 | °C |

## 3. Recommend Operating Conditions

Recommended operating conditions are specified to ensure optimal performance to the datasheet specifications. The ratings are obtained over an operating free-air temperature range unless otherwise specified.

| Symbol | Parameter | Ratings | Unit |
|---|---|---|---|
| $V_{CC}$ | Supply voltage | 4 to 28 | V |


© 2023 DIOO MICROCIRCUITS CO., LTD.

# 4. ESD Ratings

When a statically-charged person or object touches an electrostatic discharge sensitive device, the electrostatic charge might be drained through sensitive circuitry in the device. If the electrostatic discharge possesses sufficient energy, damage might occur to the device due to localized overheating.

| Symbol | Model | Condition | | Value | Unit |
|---|---|---|---|---|---|
| HBM | Human-body model | ANSI/ESDA/JEDEC JS-001 | $IN_A$, $IN_B$, PWM | ±4000 | V |
| | | | $SEL_0$ | ±4000 | |
| | | | CS | ±4000 | |
| | | | $V_{CC}$ | ±4000 | |
| | | | Output | ±4000 | |
| CDM | Charge device model | JEDEC/JS-002 | | ±2000 | |

# 5. Electrical Characteristics

## 5.1. General characteristics

The values are obtained under these conditions unless otherwise specified: $V_{CC}$ = 7 V up to 28 V; -40°C < $T_J$ < 150°C.

| Symbol | Parameter | Test Conditions | Min | Typ | Max | Unit |
|---|---|---|---|---|---|---|
| **Power section** | | | | | | |
| $V_{CC}$ | Operating supply voltage | | 4 | | 28 | V |
| $I_S$ | Supply current | Off-state (standby); $IN_A$ = $IN_B$ = 0; $SEL_0$ = 0; PWM = 0; $V_{CC}$ = 13 V; $T_J$ = 25°C; | | | 1.5 | µA |
| | | Off-state (standby); $IN_A$ = $IN_B$ = 0; $SEL_0$ = 0; PWM = 0; $V_{CC}$ = 13 V; $T_J$ = 85°C | | | 2 | µA |
| | | Off-state (standby) $IN_A$ = $IN_B$ = 0; $SEL_0$ = 0; PWM = 0; $V_{CC}$ = 13 V; $T_J$ = 125°C | | | 3 | µA |
| | | Off-state (no standby) $IN_A$ = $IN_B$ = 0; $SEL_0$ = 5 V; PWM = 0 | | 2 | 4 | mA |
| | | On-state: $IN_A$ or $IN_B$ = 5 V; PWM = 0 or PWM = 5; $SEL_0$ = X | | 3.5 | 6 | mA |
| $t_{D_STBY}$[2] | Standby mode blanking time | $V_{CC}$ = 13 V; $IN_A$ = $IN_B$ = PMW = 0 V; $V_{SEL0}$ from 5 V to 0 V | 1 | 2.5 | 5.5 | ms |
| $R_{ONHS}$[2] | Static high-side resistance | $I_{OUT}$ = 2.5 A; $T_J$ = 25°C | | 60 | | mΩ |
| | | $I_{OUT}$ = 2.5 A; $T_J$ = -40 to 150°C | | | 120 | mΩ |

 © 2023 DIOO MICROCIRCUITS CO., LTD.

| | | | | | | |
|---|---|---|---|---|---|---|
| $R_{ONLS}$(2) | Static low-side resistance | $I_{OUT}$ = 2.5 A; $T_J$ = 25°C | | 40 | | mΩ |
| | | $I_{OUT}$ = 2.5 A; $T_J$ = -40°C to 150°C | | | 80 | mΩ |
| $V_f$(2) | Free-wheeling diode forward voltage | $I_{OUT}$ = -2.5 A; $T_J$ = 150°C | | 0.7 | 0.9 | V |
| $I_{L(off)}$ | Off-state output current of one leg | $IN_A$ = $IN_B$ = 0; PWM = 0; $V_{CC}$ = 13 V; $T_J$ = 25 °C | 0 | | 0.5 | µA |
| | | $IN_A$ = $IN_B$ = 0; PWM = 0; $V_{CC}$ = 13 V; $T_J$ = 125 °C | 0 | | 3 | µA |
| $I_{L(off_h)}$ | Off-state output current of one leg with other HSD on | $IN_A$ = 0; $IN_B$ = 5 V; PWM = 0; $V_{CC}$ = 13 V | 20 | | 60 | µA |
| $V_{IL}$ | Input low level voltage | | | | 0.9 | V |
| $V_{IH}$ | Input high level voltage | | 2.1 | | | V |
| $V_{IHYST}$ | Input hysteresis voltage | | 0.2 | | | V |
| $V_{ICL}$ | Input clamp voltage | $I_{IN}$ = 0.5 mA | 6 | | 8 | V |
| | | $I_{IN}$ = -1 mA | | -0.7 | | V |
| $I_{INL}$ | Input low level current | $V_{IN}$ = 0.9 V | 1 | | | µA |
| $I_{INH}$ | Input high level current | $V_{IN}$ = 2.1 V | | | 10 | µA |
| **$SEL_0$ ($V_{CC}$ = 7 V up to 18 V; -40°C < $T_J$ < 150°C)** | | | | | | |
| $V_{SELL}$ | Input low level voltage | | | | 0.9 | V |
| $I_{SELL}$ | Low level input current | $V_{SEL}$ = 0.9 V | 1 | | | µA |
| $V_{SELH}$ | Input high level voltage | | 2.1 | | | V |
| $I_{SELH}$ | High level input current | $V_{SEL}$ = 2.1 V | | | 10 | µA |
| $V_{SEL(hyst)}$ | Input hysteresis voltage | | 0.2 | | | V |
| $V_{SELCL}$ | Input clamp voltage | $I_{SEL}$ = 0.5 mA | 6 | | 8 | V |
| | | $I_{SEL}$ = -1 mA | | -0.7 | | V |
| **PWM ($V_{CC}$ = 7 V up to 28 V; -40°C < $T_J$ < 150°C)** | | | | | | |
| $V_{PWM}$ | Input low level voltage | | | | 0.9 | V |
| $I_{PWM}$ | Low level input current | $V_{PWM}$ = 0.9 V | 1 | | | µA |
| $V_{PWM}$ | Input high level voltage | | 2.1 | | | V |
| $I_{PWMH}$ | High level input current | $V_{PWM}$ = 2.1 V | | | 10 | µA |
| $V_{PWM(hyst)}$ | Input hysteresis voltage | | 0.2 | | | V |
| $V_{PMWCL}$ | Input clamp voltage | $I_{PWM}$ = 0.5 mA | 6 | | 8 | V |
| | | $I_{PWM}$ = -1 mA | | -0.7 | | V |

**Note:**

(1) Specifications subject to change without notice.

(2) Guaranteed by design.


© 2023 DIOO MICROCIRCUITS CO., LTD.

## 5.2. Switching

The values are obtained under these conditions unless otherwise specified: $V_{CC}$ = 13 V, $R_{LOAD}$ = 5.2 Ω.

| Symbol | Parameter | Test Conditions | Min | Typ | Max | Unit |
|---|---|---|---|---|---|---|
| $f^{(1)}$ | PWM frequency | | 0 | | 20 | kHz |
| $t_{d(on)}^{(3)(6)}$ | Turn-on delay time | Input rise time < 1 µs | | 20 | | µs |
| $t_{d(off)}^{(3)(6)}$ | Turn-off delay time | Input rise time < 1 µs | | 13 | | µs |
| $t_r^{(5)(6)}$ | Rise time | | | 0.7 | 1.5 | µs |
| $t_f^{(5)(6)}$ | Fall time | | | 0.2 | 0.5 | µs |
| $t_{cross}^{(1)(4)}$ | Low-side turn-on delay time | Input rise time < 1 µs | 40 | 150 | 350 | µs |

**Note:**

(1) Parameter guaranteed by design and characterization; not subjected to production test.

(2) Specifications subject to change without notice.

(3) See Figure 6.

(4) See Figure 7.

(5) See Figure 5.

(6) Guaranteed by design.

## 5.3. Protections and diagnostics

The values are obtained under these conditions unless otherwise specified: $V_{CC}$ = 7 V up to 18 V, -40°C < $T_J$ < 150°C.

| Symbol | Parameter | Test Conditions | Min | Typ | Max | Unit |
|---|---|---|---|---|---|---|
| $V_{USD}$ | Undervoltage shutdown | | | | 4 | V |
| $V_{USDreset}$ | Undervoltage shutdown reset | | | | 4 | V |
| $V_{USDHyst}$ | Undervolatge shutdown Hysteresis | | | 0.2 | | V |
| $I_{LIM_H}^{(3)}$ | High-side current limitation | | 12 | 18 | 24 | A |
| $I_{SD_LS}^{(3)}$ | Shutdown low-side current | | 13 | 19 | 25 | A |
| $t_{SD_LS}^{(3)}$ | Time to shutdown for the low-side | $V_{INA}$ = $V_{INB}$ = 0 V; PWM = 5 V (See Figure 8) | | 5 | | µs |
| $V_{CL_HSD}^{(3)}$ | High-side clamp voltage ($V_{CC}$ to $OUT_A$ = 0 or $OUT_B$ = 0) | $I_{OUT}$ = 100 mA; $t_{CLAMP}$ = 1 ms | 40 | 46 | | V |
| $V_{CL_LSD}^{(3)}$ | Low-side clamp voltage ($OUT_A$ = $V_{CC}$ or $OUT_B$ = $V_{CC}$ to GND) | $I_{OUT}$ = 100 mA; $t_{CLAMP}$ = 1 ms | 40 | 46 | | V |
| $T_{TSD_HS}^{(3)}$ | High-side thermal shutdown temperature | $IN_x$ = 2.1 V | 160 | 175 | 190 | °C |
| $T_{TR_HS}^{(3)}$ | High-side thermal reset temperature | | 135 | | | °C |


© 2023 DIOO MICROCIRCUITS CO., LTD.

| | | | | | | |
|---|---|---|---|---|---|---|
| $T_{HYST_HS}$(3) | High-side thermal hysteresis ($T_{SD_HS}$ - $T_{R_HS}$) | | | 15 | | °C |
| $T_{TSD_LS}$(3) | Low-side thermal shutdown temperature | $IN_x$ = 0 V | 160 | 175 | 190 | °C |
| $V_{CL}$(3) | Total clamp voltage ($V_{CC}$ to GND) | $I_{OUT}$ = 100 mA; $t_{CLAMP}$ = 1 ms | 40 | 46 | | V |
| $V_{OL}$ | OFF-state open-load voltage detection threshold | $IN_A$ = $IN_B$ = 0; PWM = 0; $V_{SEL0}$ = 5 V for CHA; $V_{SEL0}$ = 0 V and within $t_{D_STBY}$ for CHB | 2 | 3 | 4 | V |
| $I_{L(off2)}$ | OFF-state output sink current | $IN_A$ = $IN_B$ = 0; $V_{OUTx}$ = $V_{OL}$; PWM = 0 V; $VSEL_0$ = 5 V for CHA; $V_{SEL0}$ = 0 V and within $t_{D_STBY}$ for CHB | - 100 | | - 15 | µA |
| $t_{DSTKON}$(1) | OFF-state diagnostic delay time from falling edge of INPUT (See Figure 4) | $IN_A$ = 5 V to 0 V; $IN_B$ = 0 V; $V_{SEL0}$ = 5 V; $I_{OUT}$ = 0 A; $V_{OUTA}$ = 4 V; PWM = 0 V | 40 | 150 | 350 | µs |
| $t_{D_VOL}$(1) | OFF-state diagnostic delay time from rising edge of $V_{OUT}$ (See Figure 11) | $IN_A$ = $IN_B$ = 0 V; PWM = 0 V; $V_{OUTx}$ = 0 V to 4 V; $V_{SEL0}$ = 5 V for CHA; $V_{SEL0}$ = 0 V and within $t_{D_STBY}$ for CHB | | 5 | 30 | µs |
| $t_{Latch_RST_HD}$(1) | Input reset time for high-side fault unlatch (See Figure 9) | $V_{INx}$ = 5 V to 0 V; HSDx faulting | 3 | 10 | 20 | µs |
| $t_{Latch_RST_LS}$(1) | Input reset time for low-side fault unlatch (See Figure 10) | $V_{INx}$ = 0 V to 5 V; LSDx faulting | 3 | 10 | 20 | µs |

**Note:**

(1) Parameter guaranteed by design and characterization; not subjected to production test.

(2) Specifications subject to change without notice.

(3) Guaranteed by design.

## 5.4. Current sense

The values are obtained under these conditions unless otherwise specified: 7 V < $V_{CC}$ < 18 V, -40°C < $T_J$ < 150°C.

| Symbol | Parameter | Test Conditions | Min | Typ | Max | Unit |
|---|---|---|---|---|---|---|
| $V_{SENSE_CL}$(3) | MultiSense clamp voltage | $V_{CC}$ = 18 V; $I_{SENSE}$ = -5 mA | | 11 | | V |
| | | $V_{CC}$ = 18 V; $I_{SENSE}$ = 5 mA | -13 | | -9 | V |
| $K_0$ | $I_{OUT}/I_{SENSE}$ | $I_{OUT}$ = 0.05 A; $V_{SENSE}$ = 0.5 V; $T_J$ = -40°C to 150°C | 536 | | | |
| $K_1$ | $I_{OUT}/I_{SENSE}$ | $I_{OUT}$ = 0.2 A; $V_{SENSE}$ = 0.5 V; $T_J$ = -40°C to 150°C | 710 | 1190 | 1670 | |
| $K_2$ | $I_{OUT}/I_{SENSE}$ | $I_{OUT}$ = 2.5 A; $V_{SENSE}$ = 4 V; $T_J$ = -40°C to 150°C | 1015 | 1120 | 1229 | |
| $K_3$ | $I_{OUT}/I_{SENSE}$ | $I_{OUT}$ = 4 A; $V_{SENSE}$ = 4 V; $T_J$ = -40°C to 150°C | 1040 | 1120 | 1200 | |

 © 2023 DIOO MICROCIRCUITS CO., LTD.

| | | | | | | |
|---|---|---|---|---|---|---|
| $dK_0/K_0$(1)(2) | Analog sense current drift | $I_{OUT}$ = 0.05 A; $V_{SENSE}$ = 0.5 V; $T_J$ = -40°C to 150°C | -25 | | 25 | % |
| $dK_1/K_1$(1)(2) | Analog sense current drift | $I_{OUT}$ = 0.2 A; $V_{SENSE}$ = 0.5 V; $T_J$ = -40°C to 150°C | -21 | | 21 | % |
| $dK_2/K_2$(1)(2) | Analog sense current drift | $I_{OUT}$ = 2.5 A; $V_{SENSE}$ = 4 V; $T_J$ = -40°C to 150°C | -5 | | 5 | % |
| $dK_3/K_3$(1)(2) | Analog sense current drift | $I_{OUT}$ = 4 A; $V_{SENSE}$ = 4 V; $T_J$ = -40°C to 150°C | -4 | | 4 | % |
| $V_{SENSE_SAT}$ | Max analog sense output voltage | $V_{CC}$ = 7 V; $R_{SENSE}$ = 10 kΩ; $V_{SEL0}$ = 5 V; $I_{OUTA}$ = 4 A; $V_{INA}$ = 5 V; PWM = 0; $T_J$ = 150 °C | 5 | | | V |
| $I_{SENSE0}$ | MultiSense leakage current | $I_{OUT}$ = 0 A; $V_{SENSE}$ = 0 V; $IN_x$ = 0 V; $SEL_0$ = 0; $T_J$ = -40°C to 150°C (standby) | 0 | | 0.5 | µA |
| | | $I_{OUT}$ = 0 A; $V_{SENSE}$ = 0 V; $IN_x$ = 0 V; $SEL_0$ = 5 V; $T_J$ = -40°C to 150°C (no standby) | 0 | | 0.5 | µA |
| | | $IN_x$ = 5 V; PWM = 5 V: $T_J$ = -40°C to 150°C; $I_{OUT}$ = 0 A | 0 | | 5 | µA |
| $V_{SENSEH}$ | MultiSense output voltage in fault condition | $V_{CC}$ = 13 V; $R_{SENSE}$ = 1 kΩ – E.g: $OUT_A$ in open-load $IN_A$ = 0 V; $I_{OUTA}$ = 0 A; $V_{OUTA}$ = 4 V; $V_{SEL0}$ = 5 V | 3.6 | | 7 | V |
| $I_{SENSEH}$ | MultiSense output current in fault condition | 9 V < $V_{CC}$ < 18 V; $V_{SENSE}$ = $V_{SENSEH}$ | 8 | 18 | 28 | mA |

**Note:**

(1) Analog sense current drift is deviation of factor K for a given device over -40°C to 150°C and 9 V < $V_{CC}$ < 18 V, with respect to its value measured at $T_J$ = 25°C, $V_{CC}$ = 13 V.

(2) Parameter guaranteed by design and characterization; not subjected to production test.

(3) Guaranteed by design.

(4) Specifications subject to change without notice.

 © 2023 DIOO MICROCIRCUITS CO., LTD.

## 5.5. Detailed figures

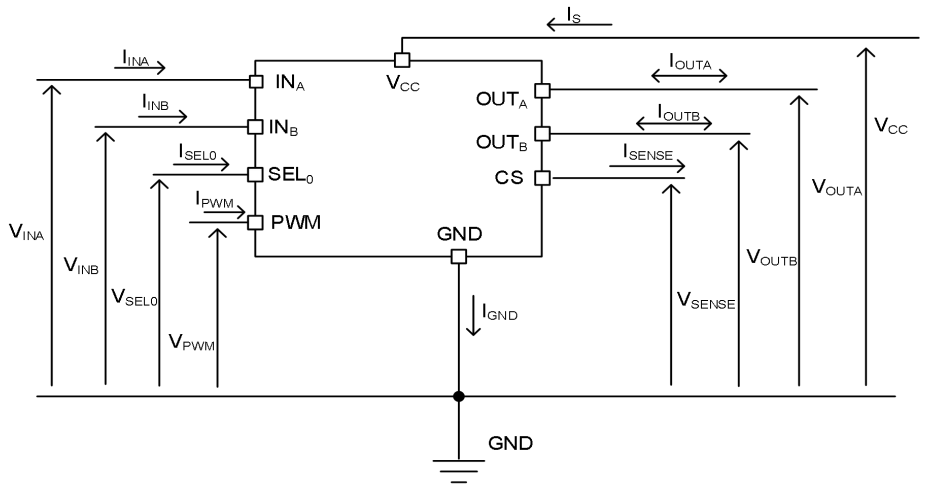


*Figure 2. Current and voltage conventions*

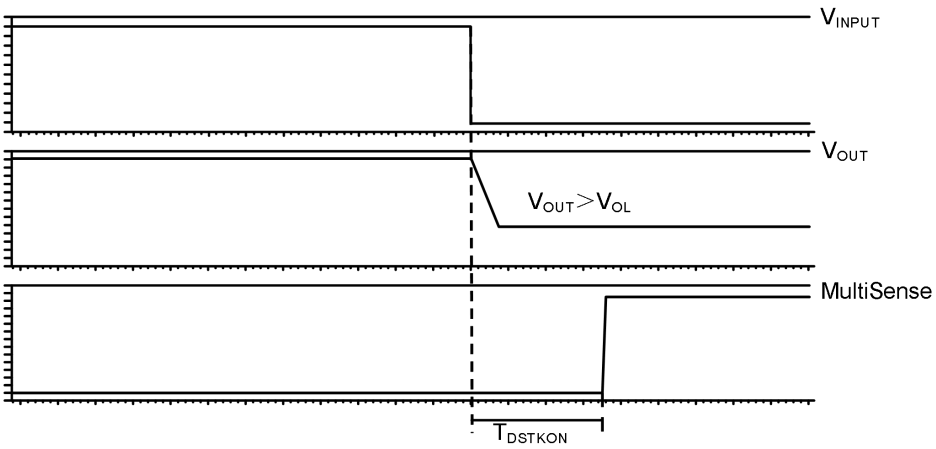


*Figure 3. $t_{DSTKON}$*

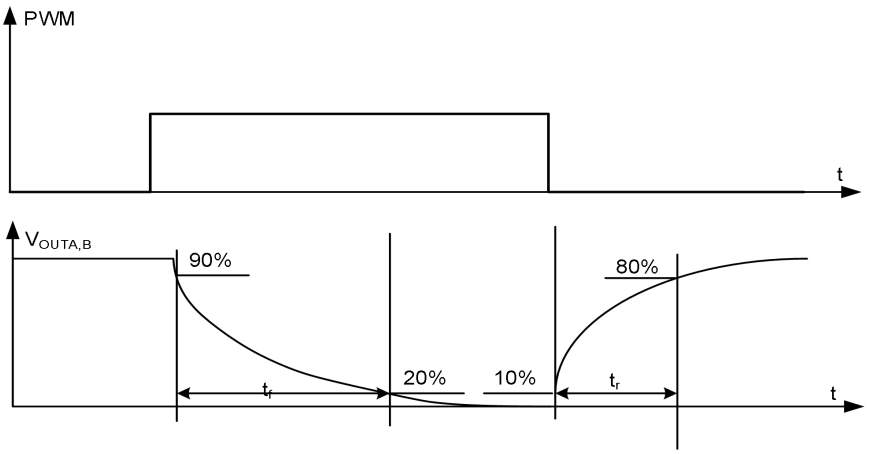


*Figure 4. Definition of the low-side switching times*

 © 2023 DIOO MICROCIRCUITS CO., LTD.

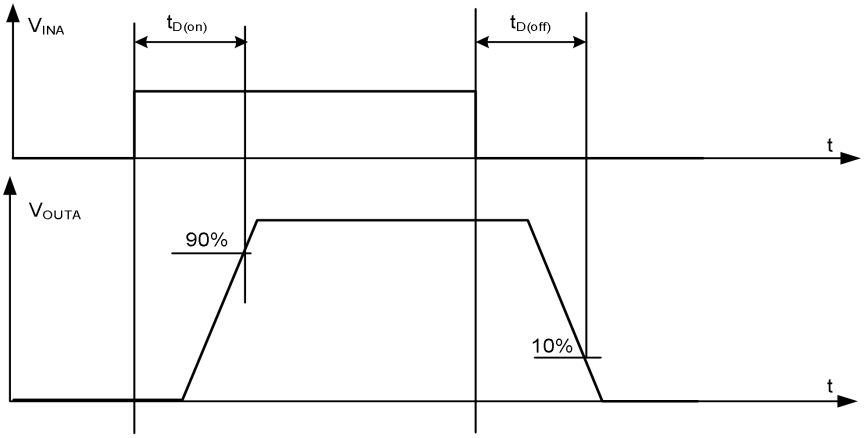


*Figure 5. Definition of the high-side switching times*

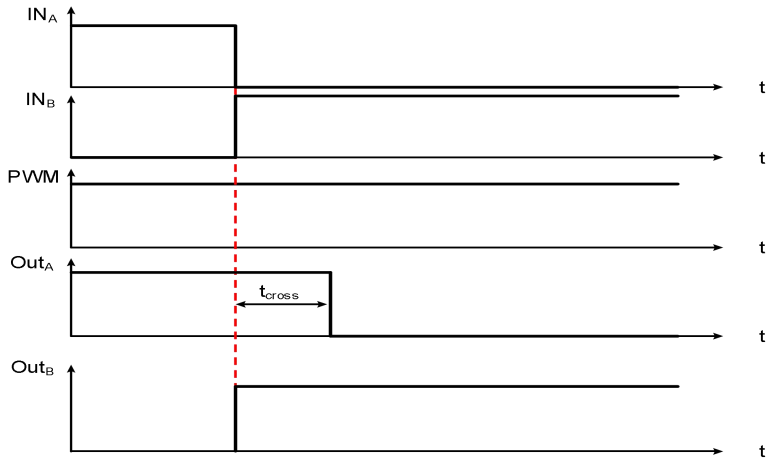


*Figure 6. Low-side turn-on delay time*

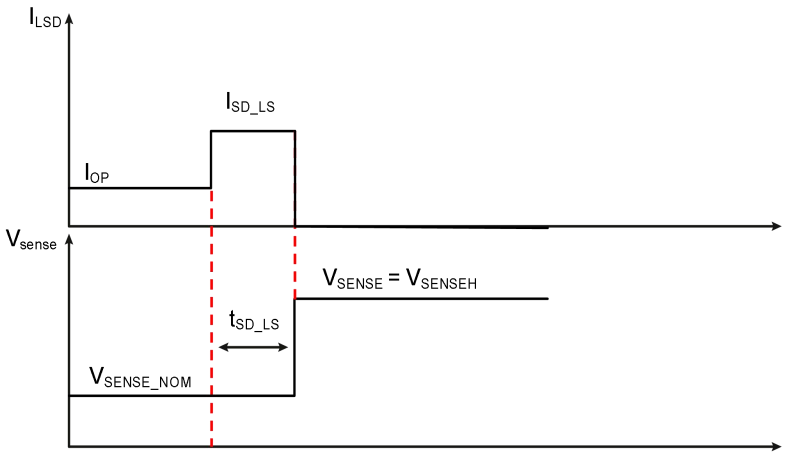


*Figure 7. Time to shutdown for the low-side driver*

 © 2023 DIOO MICROCIRCUITS CO., LTD.

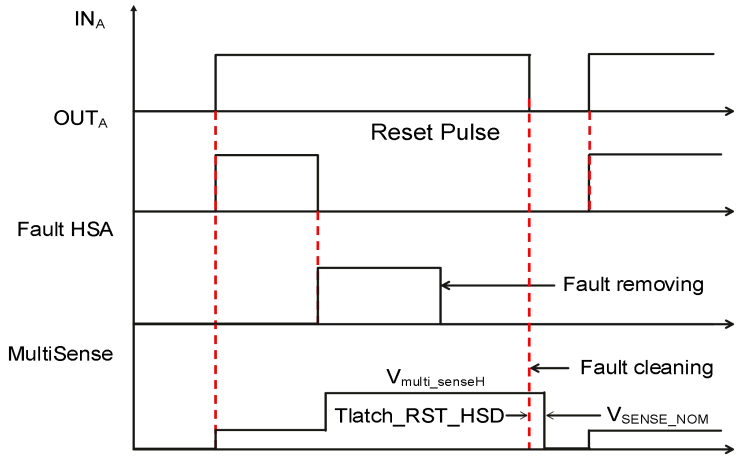


*Figure 8. Input reset time for HSD - fault unlatch*

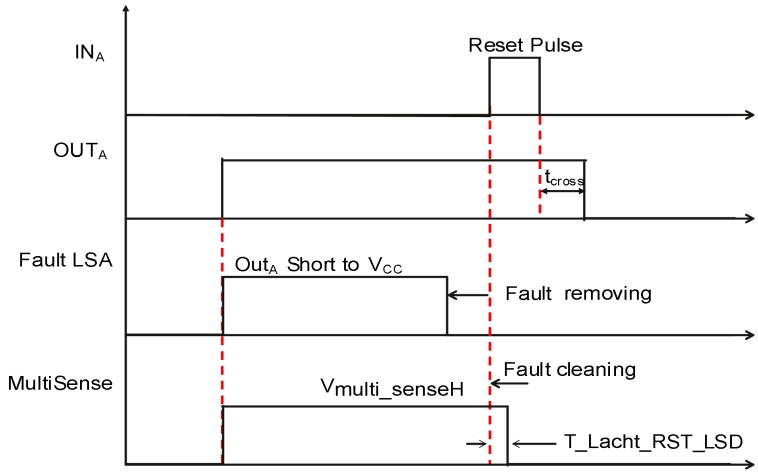


*Figure 9. Input reset time for LSD - fault unlatch*

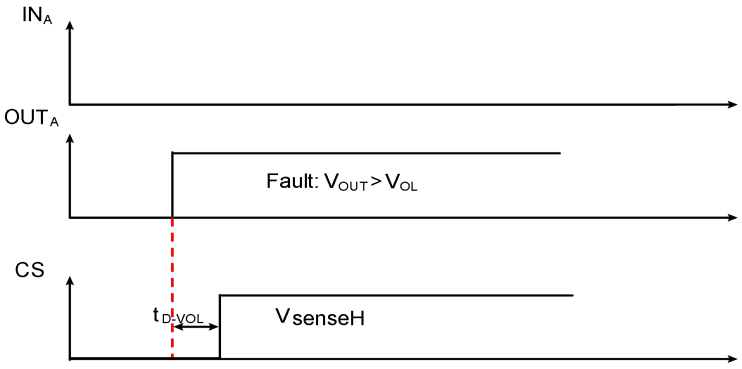


*Figure 10. OFF-state diagnostic delay time from rising edge of $V_{OUT}$ ($t_{D_VOL}$)*

 © 2023 DIOO MICROCIRCUITS CO., LTD.

# 6. Typical Characteristics

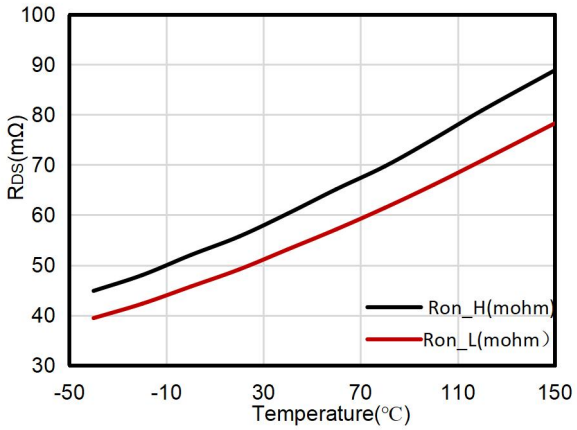


*Figure 11. $R_{DS(on)}$ vs. Temperature*

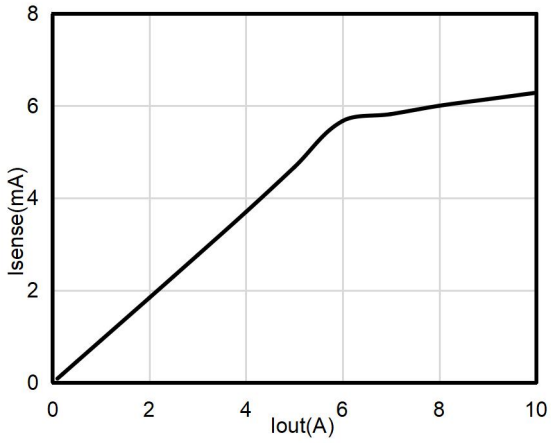


*Figure 12. $I_{SENSE}$ vs. $I_{OUT}$*

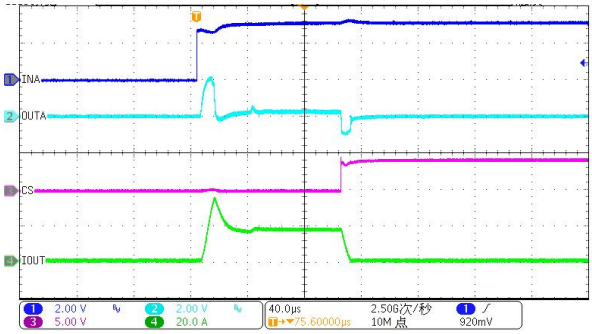


$V_{CC}$ = 13.5 V, $SEL_0$ = 1

*Figure 13. Protection-output short to GND*

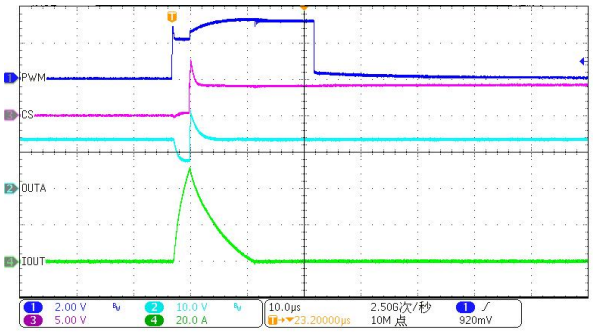


$V_{CC}$ = 13.5 V, $SEL_0$ = 0, $IN_A$ = 1, $IN_B$ = 0

*Figure 14. Protection-output hard short to $V_{CC}$*

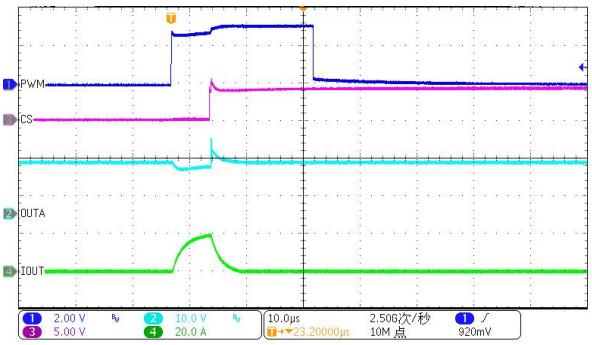


$V_{CC}$ = 13.5 V, $SEL_0$ = 0, $IN_A$ = 1, $IN_B$ = 0

*Figure 15. Protection-output soft short to $V_{CC}$*

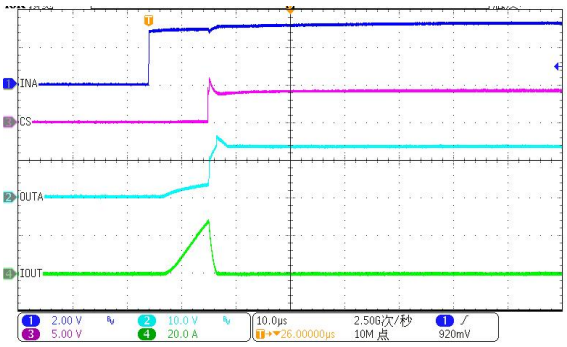


$V_{CC}$ = 13.5 V, $SEL_0$ = 0, PWM = 1

*Figure 16. $OUT_A$ short to $OUT_B$ - LSB ON then HSA switched ON*

 © 2023 DIOO MICROCIRCUITS CO., LTD.

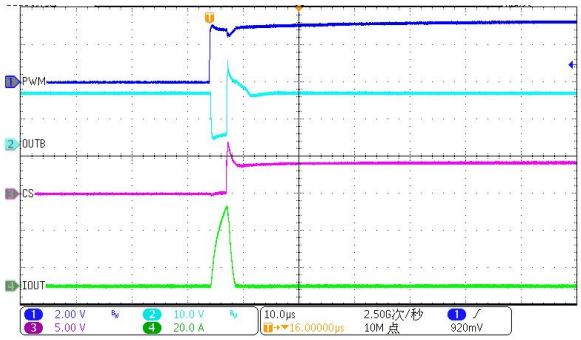


$V_{CC}$ = 13.5 V, $SEL_0$ = 0, $IN_B$ = 1

***Figure 17. $OUT_A$ short to $OUT_B$ - HSB ON then LSA switched ON***

 © 2023 DIOO MICROCIRCUITS CO., LTD.

# 7. Truth Tables

*Table 2. Truth table: operative condition*

| Pin Status | | | | | HSDs and LSDs Status | | | |
|---|---|---|---|---|---|---|---|---|
| $IN_A$ | $IN_B$ | SEL0 | PWM | Current Sense | HSDA | LSDA | HSDB | LSDB |
| 1 | 1 | 1 | X | Current monitoring HSDA | On | Off | On | Off |
| | | 0 | | Current monitoring HSDB | | | | |
| 1 | 0 | 1 | 1 | Current monitoring HSDA | On | Off | Off | On |
| | | | 0 | | On | Off | Off | Off |
| 1 | 0 | 0 | 1 | Hi-Z | On | Off | Off | On |
| | | | 0 | | On | Off | Off | Off |
| 0 | 1 | 1 | 1 | Hi-Z | Off | On | On | Off |
| | | | 0 | | Off | Off | On | Off |
| 0 | 1 | 0 | 1 | Current monitoring HSDB | Off | On | On | Off |
| | | | 0 | | Off | Off | On | Off |
| 0 | 0 | 1 | 1 | Hi-Z | Off | On | Off | On |
| | | 0 | | | | | | |
| 0 | 0 | 1 | 0 | X (1) | Off | Off | Off | Off |
| | | 0(2) | | | Off | Off | Off | Off |

**Note:**

(1) Refer to Table 4.

(2) For $IN_A = IN_B = SEL_0 = PWM = 0$, the device enters in standby after $t_{D_STBY}$.

*Table 3. Truth table: ON-state fault conditions*

| Digital Input Pins | | | | Current Sense | Comment |
|---|---|---|---|---|---|
| $IN_A$ | $IN_B$ | PWM | SEL0 | | |
| 0 | 0 | 1 | 0 | VsenseH | LSB protection triggered; LSB latched off |
| 0 | 0 | 1 | 1 | VsenseH | LSA protection triggered; LSA latched off |
| 0 | 1 | X | 0 | VsenseH | HSB protection triggered; HSB latched off |
| 0 | 1 | 1 | 1 | VsenseH | LSA protection triggered; LSA latched off |
| 1 | 0 | 1 | 0 | VsenseH | LSB protection triggered; LSB latched off |
| 1 | 0 | X | 1 | VsenseH | HSA protection triggered; HSA latched off |
| 1 | 1 | X | 0 | VsenseH | HSB protection triggered; HSB latched off |
| 1 | 1 | X | 1 | VsenseH | HSA protection triggered; HSA latched off |

 © 2023 DIOO MICROCIRCUITS CO., LTD.

*Table 4. Truth table: OFF-state*

| $IN_A$ | $IN_B$ | $SEL_0$ | PWM | $Out_A$ | $Out_B$ | CS | Description |
|---|---|---|---|---|---|---|---|
| OFF-state diagnostic | | | | | | | |
| 0 | 0 | 1 | 0 | $V_{outA} > V_{OL}$ | X | $V_{SENSEH}$ | Case 1. $OUT_A$ shorted to $V_{CC}$ if no pull-up resistor is applied<br>Case 2. No open-load in full bridge configuration with an external pull-up resistor on $OUT_B$<br>Case 3. open-load in half bridge configuration with an external pull-up resistor on $OUT_A$ (motor connected between $OUT_A$ and Ground) |
| | | | | $V_{outA} < V_{OL}$ | X | Hi-Z | Case 1. Open-load in full bridge configuration with an external pull-up resistor on $OUT_B$<br>Case 2. No open-load in half bridge configuration with an external pull-up resistor on $OUT_A$ (motor connected between $OUT_A$ and Ground) |
| | | 0(1)(2) | | X | $V_{outB} > V_{OL}$ | $V_{SENSEH}$ | Case 1. $OUT_B$ shorted to $V_{CC}$ if no pull-up resistor is applied<br>Case 2. No open-load in full bridge configuration with an external pull-up resistor on $OUT_A$<br>Case 3. Open-load in half bridge configuration with an external pull-up resistor on $OUT_B$ (motor connected between $OUT_B$ and Ground) |
| | | | | X | $V_{outB} < V_{OL}$ | Hi-Z | Case 1. Open-load in full bridge configuration with an external pull-up resistor on $OUT_A$<br>Case 2. No open-load in half bridge configuration with an external pull-up resistor on $OUT_B$ (motor connected between $OUT_B$ and Ground) |

**Note:**

(1) The device enters standby mode after standby mode blanking time.

(2) To power on the device from the standby, toggle $IN_A$ or $IN_B$ from 0 to 1 first and then PWM from 0 to 1 to avoid any over-stress on the device in case of short-to-battery.

 © 2023 DIOO MICROCIRCUITS CO., LTD.

# 8. Waveforms

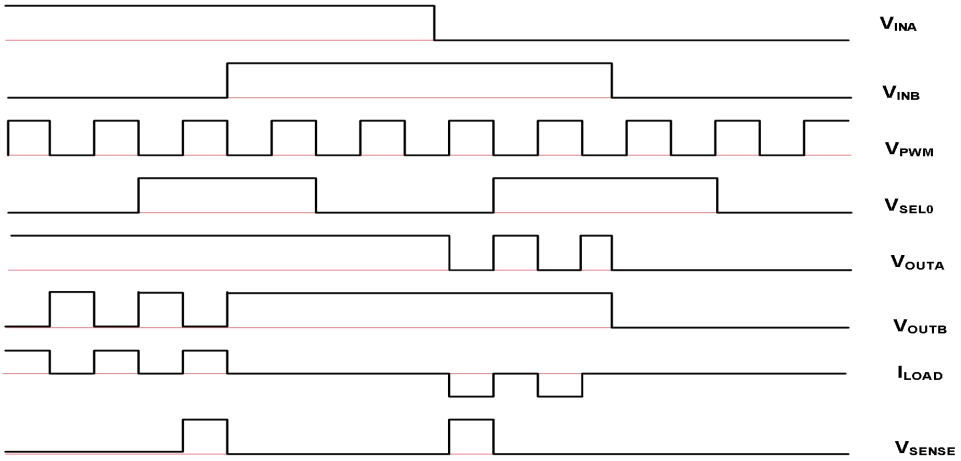


*Figure 18. Normal operative conditions*

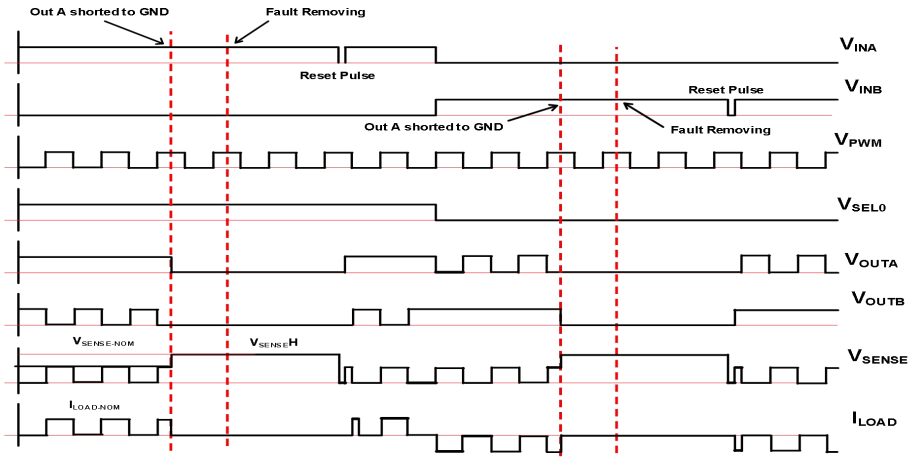


*Figure 19. OUT shorted to ground and short clearing*

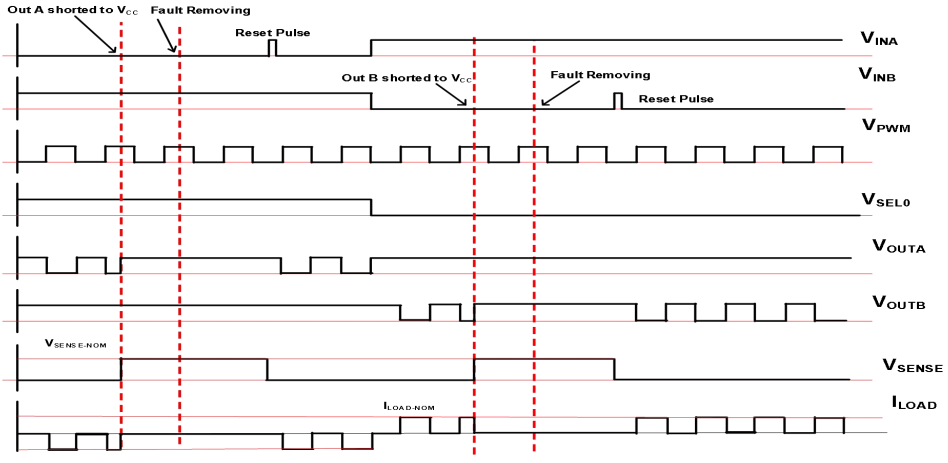


*Figure 20. OUT shorted to VCC and short clearing*

 © 2023 DIOO MICROCIRCUITS CO., LTD.

# 9. Block Diagram

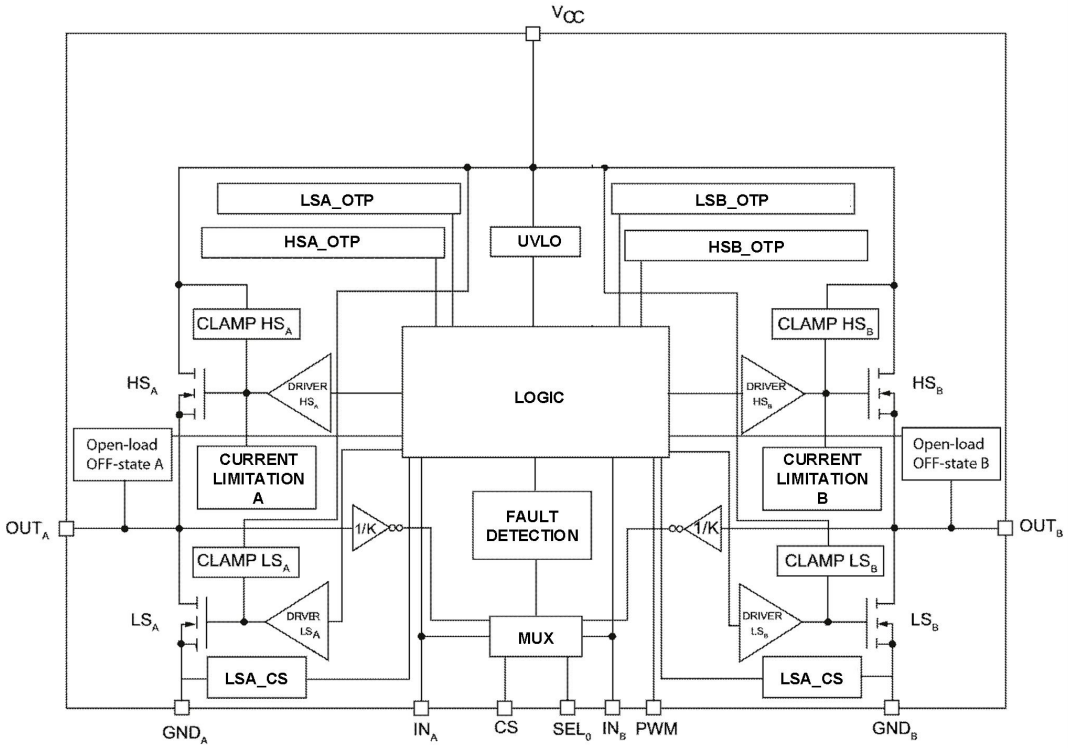


| Name | Description |
|---|---|
| Logic control | Control the high-side and the low-side switches according to the truth table. |
| Undervoltage | Shut down the device for battery voltage lower than 4 V. |
| High-side and low-side clamp voltage | Protect the high-side and the low-side switches from the high voltage on the battery line. |
| High-side and low-side drivers | Drive the gate of the associated switch to allow a proper $R_{on}$ for the leg of the bridge. |
| Current limitation | Limit the motor current in case of short-circuit. |
| High-side and low-side over-temperature protection | Shut down the associated driver to prevent degradation and to protect the die. |
| Low-side current sense | Detect when low side current exceeds shutdown current and latches off the associated low side. |
| Fault detection | Declare the abnormal behavior of the switch through MultiSense pin. |
| Power limitation | Limit the power dissipation of the high-side driver inside safe range in case of short to ground condition. |

 © 2023 DIOO MICROCIRCUITS CO., LTD.

# 10. Application Information

**Important notice:** Validation and testing are the most reliable ways to confirm system functionality. The application information is not part of the specification and is for reference purposes only.

## 10.1. Reverse battery protection

Three possible solutions to protect the device from reverse battery:

- A Schottky diode D connected to $V_{CC}$ pin
- An N-channel MOSFET connected to the GND pin
- A P-channel MOSFET connected to the $V_{CC}$ pin

When the reverse battery protections is absent, the device sustains less than -15 A because of the tow body diodes of the power MOSFETs. Additionally, in reverse battery condition, the I/Os of the device is pulled down to the $V_{CC}$ line (approximately -1.5 V). To limit the sink current from the microcontroller I/Os, insert a series resistor. The series resistor can be calculated from Equation (1):

$$R = \frac{V_{IOs} - V_{CC}}{I_{Rmax}} \quad (1)$$

where

$V_{IOs}$ is the voltage on the I/Os

$V_{cc}$ is the operating power supply

$I_{Rmax}$ is the maximum target reverse current through microcontroller I/Os

## 10.2. OFF-state open-load detection

Use an external circuitry to detect an open-load in off-state. Connect the circuitry between the output and $V_{BATT}$.

Put one network on each leg in case of half bridge operation. Put one network on one of the output in case of full bridge. (See Table 4.)

The external circuitry has an external pull-up resistor $R_{pull_up}$ that connects the output to a positive supply voltage $V_{Batt}$.

To reduce the overall standby current during the module standby mode, switch off $V_{Batt}$ by using an external pull_up switch.

Dimension $R_{pull_up}$ to ensure that in normal operative conditions $V_{OUT}$ is larger than $V_{OLmax.}$ Select the $R_{pull_up}$ according to Equation (2) and (3).

- When the device is used in half bridge configuration,

$$R_{pull_up} < \frac{V_{BATTmin} - V_{OLmax}}{I_{L(off2)min}} \quad (2)$$

- When the device is used in full bridge configuration,

$$R_{pull_up} < \frac{V_{BATTmin} - V_{OLmax}}{2 \times I_{L(off2)min}} \quad (3)$$

where $I_{L(off2)}$ is minimum when $V_{OL}$ is maximum.

 © 2023 DIOO MICROCIRCUITS CO., LTD.

## 10.3. Application examples

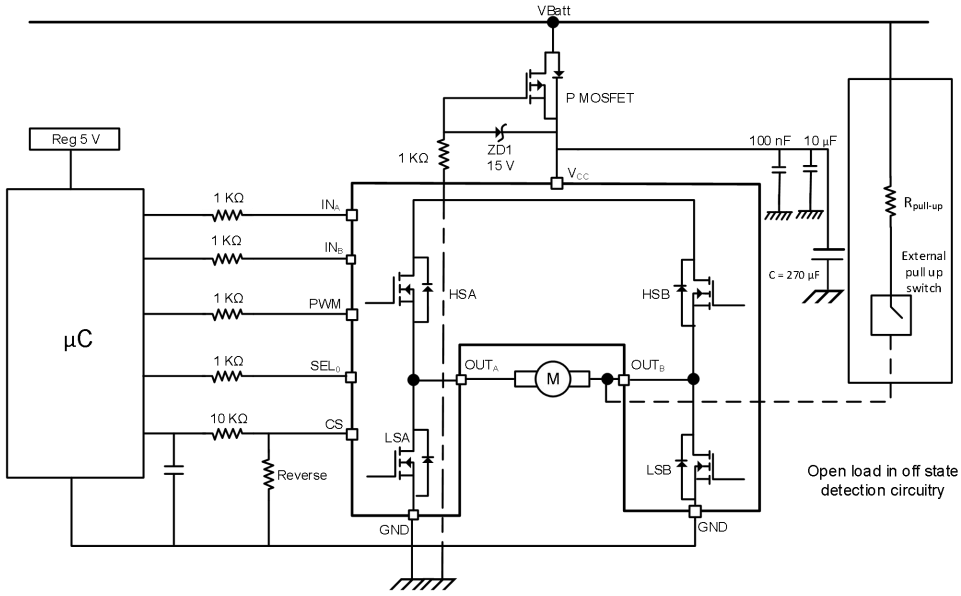


*Figure 21. Application schematic with reverse battery protection connected to $V_{batt}$*

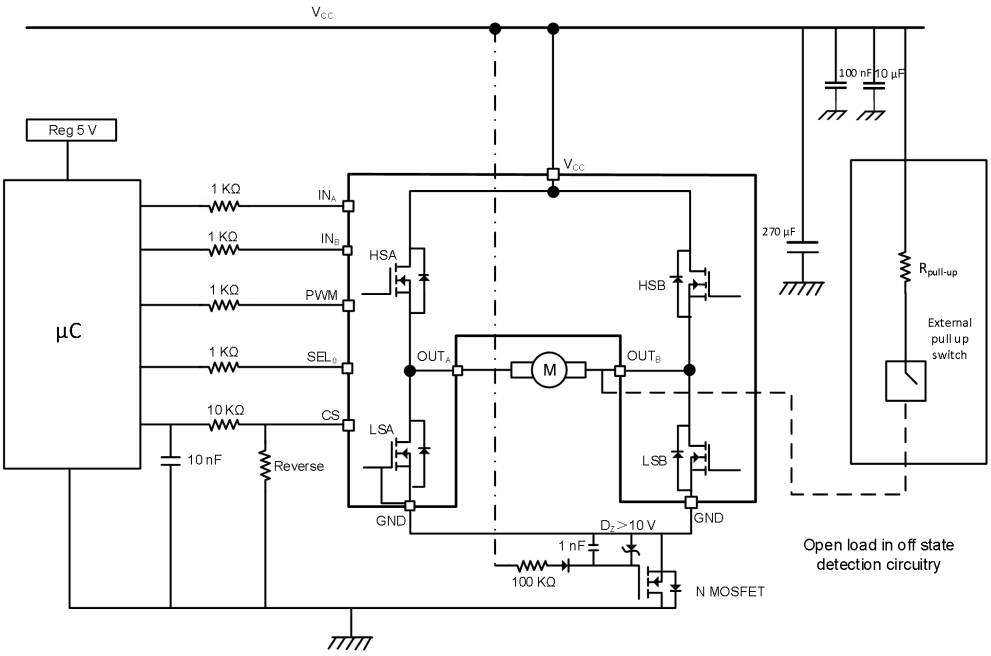


*Figure 22. Application schematic with reverse battery protection connected to GND*

 © 2023 DIOO MICROCIRCUITS CO., LTD.

## 10.4. Device configurations

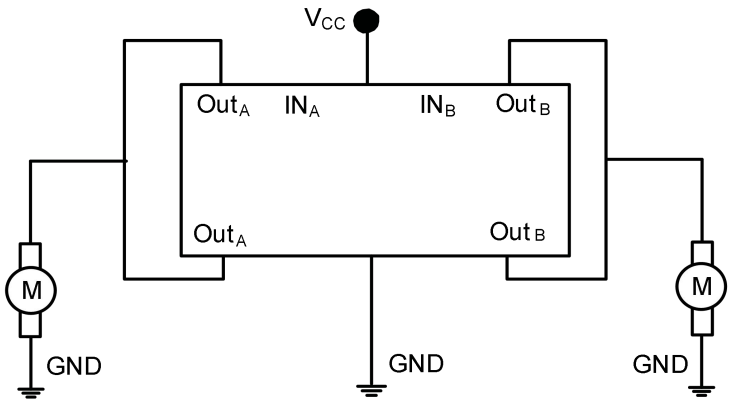


*Figure 23. Half-bridge configuration (case A)*

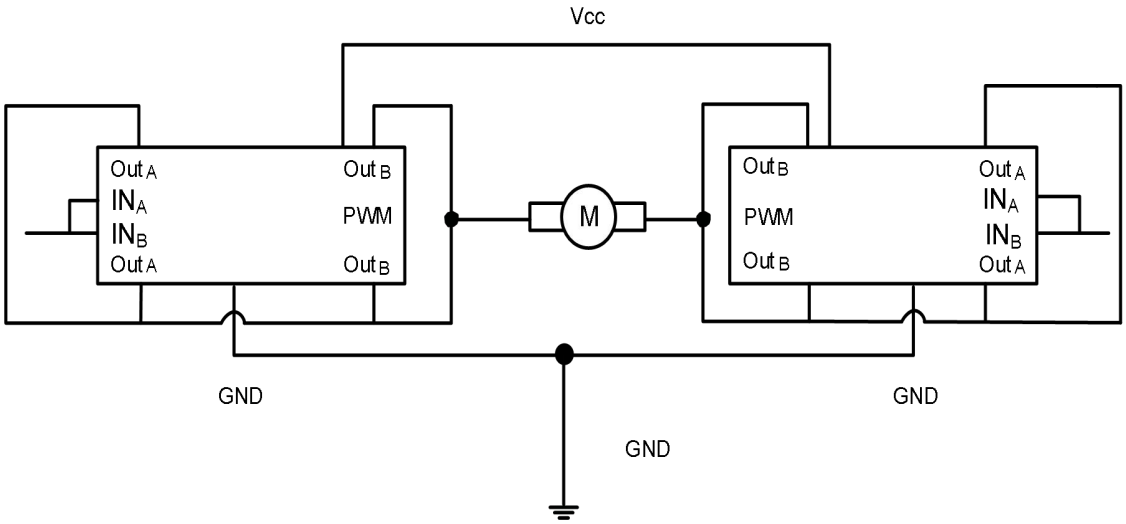


*Figure 24. Half-bridge configuration (case B)*

 © 2023 DIOO MICROCIRCUITS CO., LTD.

# 11. Physical Dimensions

## 11.1. SOP16

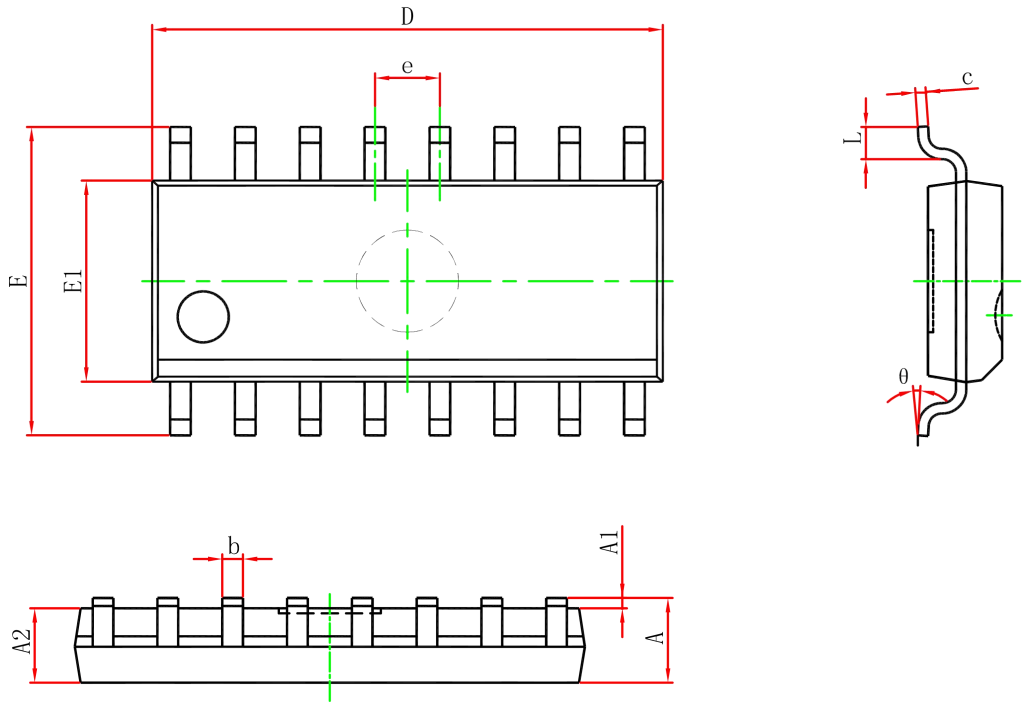


| Common Dimensions (Units of measure = Millimeter) | | |
|---|---|---|
| **Symbol** | **Min** | **Max** |
| A | - | 1.750 |
| A1 | 0.100 | 0.250 |
| A2 | 1.400 | 1.500 |
| b | 0.330 | 0.510 |
| c | 0.170 | 0.250 |
| D | 9.800 | 10.200 |
| e | 1.270 BSC | |
| E | 5.800 | 6.200 |
| E1 | 3.800 | 4.000 |
| L | 0.400 | 1.270 |
| θ | 0° | 8° |


© 2023 DIOO MICROCIRCUITS CO., LTD.

## Disclaimer

This specification and information contained herein are provided on an “AS IS” basis and WITH ALL FAULTS. All product specifications, statements, information, and data (collectively, the “Information”) in this datasheet or made available on the website of www.dioo.com are subject to change without notice. The customer is responsible for checking and verifying the extent to which the Information contained in this publication is applicable to his/her application. All Information given herein is believed to be accurate and reliable, but it is presented without guarantee, warranty, or responsibility of any kind, express or implied.

 © 2023 DIOO MICROCIRCUITS CO., LTD.