Automotive 150 mA, 40 V, Ultra-Low Quiescent Current, Low-Dropout Regulator

Features

- AEC-Q100 qualified:
  - Device ambient temperature: -40°C ≤ T_A ≤ 125°C
  - Device junction temperature: -40°C ≤ T_J ≤ 150°C
- 3 V to 40 V wide input voltage range with up to 45 V transient
- Operating output voltage range:
  - Fixed 1.2 V to 5 V output voltage
  - Adjustable 1.2 V to 16 V output voltage
- Low power consumption:
  - 4 μA typical at no load
  - 450 nA shutdown current
- Maximum output current: 150 mA
- ±2% output voltage accuracy over ambient temperature range
- Maximum dropout voltage: 210 mV at 150 mA load current for fixed 5 V output version
- Stable with low equivalent series resistance ceramic output-stability capacitor

Applications

- Automotive head units
- Telematics control units
- Headlights
- Body control modules
- Battery management systems (BMS)
- Inverter and motor controls

Package Information

Part Number	Package	Body Size
DIA7855	DFN6	2 mm × 2 mm
	DFN8	3 mm × 3 mm
	EP-MSOP8	3 mm × 3 mm
	SOT-223	6.5 mm × 3.4 mm

Description

The DIA7855 is a low-dropout linear regulator designed to function with a wide input voltage range from 3 V to 40 V. The 3 V minimum operation voltage allows DIA7855 to function normally during cold-crank and start-stop conditions.

With only 4 μA ultra-low quiescent current at no load, the DIA7855 is quite suitable for microcontrollers and CAN/LIN transceivers power supply in standby systems.

The DIA7855 integrates short-circuit and overcurrent protection. -40°C to 125°C wide operating temperature range enable the DIA7855 to be used in the harsh automotive environment.

The device uses thermally conductive package to enable sustained operation despite significant dissipation across the device. Additionally, the device integrates thermal shutdown, it designed as a power for various automotive applications.

Simplified Schematic

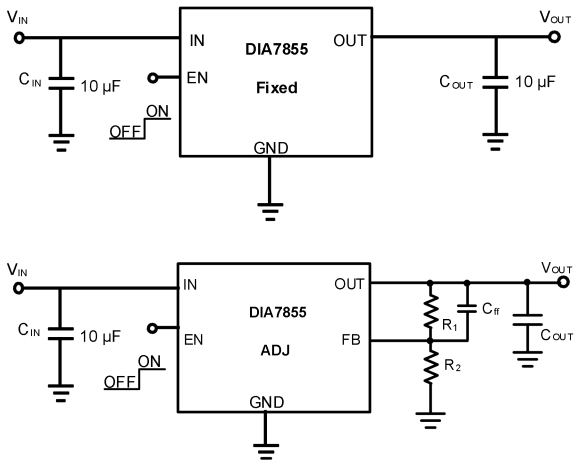

© 2023 DIOO MICROCIRCUITS CO., LTD.

Ordering Information

Part No.	Top Marking	MSL	RoHS	T_A	Package	
DIA7855BaaCD6	E5BX	1	Green	-40 to 125°C	DFN2*2-6	Tape & Reel, 3000
DIA7855BADJCD6	E5BQ	1	Green	-40 to 125°C	DFN2*2-6	Tape & Reel, 3000
DIA7855BGADJCD6	5BGQ	1	Green	-40 to 125°C	DFN2*2-6	Tape & Reel, 3000
DIA7855BGaaCD6	5BGX	1	Green	-40 to 125°C	DFN2*2-6	Tape & Reel, 3000
DIA7855BaaCD8	DE5BX	1	Green	-40 to 125°C	DFN3*3-8	Tape & Reel, 3000
DIA7855BADJCD8	DE5BQ	1	Green	-40 to 125°C	DFN3*3-8	Tape & Reel, 3000
DIA7855BaaXM8	DE5BX	1	Green	-40 to 125°C	EP-MSOP8	Tape & Reel, 3000
DIA7855BADJXM8	DE5BQ	1	Green	-40 to 125°C	EP-MSOP8	Tape & Reel, 3000
DIA7855BaaTD3	DE5BX	3	Green	-40 to 125°C	SOT-223	Tape & Reel, 2500

Output Voltage Options								
Option Code "**aa**"	**12**	**15**	**18**	**25**	**28**	**30**	**33**	**50**
Voltage	1.2 V	1.5 V	1.8 V	2.5 V	2.8 V	3.0 V	3.3 V	5.0 V

Marking Definition	
E5BX	E5B: Product code; X: Voltage code.
DE5BX	DE5B: Product code; X: Voltage code.
E5BQ	E5B: Product code; Q: Voltage code.
DE5BQ	DE5B: Product code; Q: Voltage code.

Voltage Code									
Option Code "X"	F	G	H	J	K	L	M	P	Q
Voltage	1.2 V	1.5 V	1.8 V	2.5 V	2.8 V	3.0 V	3.3 V	5.0 V	ADJ

If you encounter any issue in the process of using the device, please contact our customer service at marketing@dioo.com or phone us at (+86)-21-62116882. If you have any improvement suggestions regarding the datasheet, we encourage you to contact our technical writing team at docs@dioo.com. Your feedback is invaluable for us to provide a better user experience.

© 2023 DIOO MICROCIRCUITS CO., LTD.

Table of Contents

1. Pin Assignment and Functions 1
2. Absolute Maximum Ratings 3
3. Recommended Operating Condition 3
4. Thermal Considerations 4
5. Electrical Characteristics 4
6. Typical Characteristics 6
7. Block Diagram 8
8. Function Description 9
8.1. Overview 9
8.2. Device enable (EN) 9
8.3. Undervoltage shutdown 9
8.4. Thermal shutdown 9
8.5. Operation with V_{IN} lower than 3 V 9
8.6. Operation with V_{IN} higher than 3 V 9
9. Application Information 10
9.1. Application and implementation 10
9.2. Detailed design procedure 10
9.3. Input capacitor 10
9.4. Output capacitor 10
10. Physical Dimensions 11
10.1. DFN2*2-6 11
10.2. EP-MSOP-8 12
10.3. SOT-223 13
10.4. DFN3*3-8 14

List of Figures

Figure 1. PSRR vs. Output and I_L 6
Figure 2. PSRR vs. Frequency 6
Figure 3. Shutdown current vs. Input voltage 6
Figure 4. Output voltage vs. Input voltage at V_{OUT} = 3.3 V 6
Figure 5. Quiescent current vs. Input voltage 6
Figure 6. Enable current vs. Input voltage 6
Figure 7. Load transient 7
Figure 8. Turn-on time 7
Figure 9. Block diagram - adjustable version 8
Figure 10. Block diagram - fixed version 8
Figure 11. Typical application - adjustable version 10
Figure 12. Typical application - fixed version 10

 © 2023 DIOO MICROCIRCUITS CO., LTD.

1. Pin Assignment and Functions

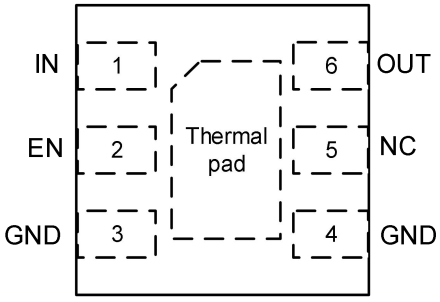

Fixed
DFN2*2-6 (Top view)
DIA7855BaaCD6

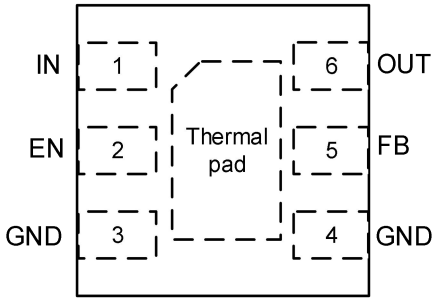

Adjustable
DFN2*2-6 (Top view)
DIA7855BADJCD6

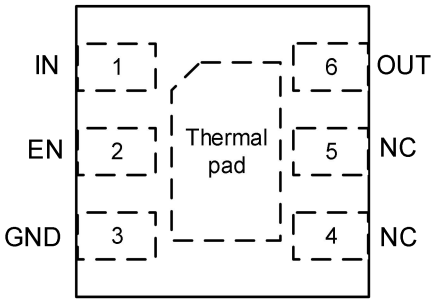

Fixed
DFN2*2-6 (Top view)
DIA7855BGaaCD6

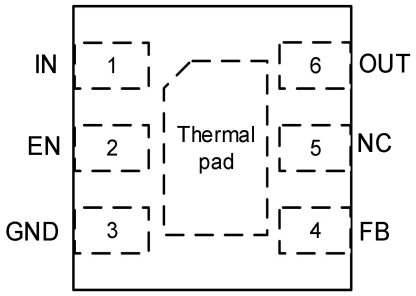

Adjustable
DFN2*2-6 (Top view)
DIA7855BGADJCD6

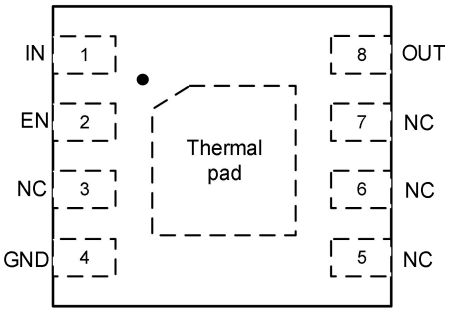

Fixed
DFN3*3-8 (Top view)
DIA7855BaaCD8

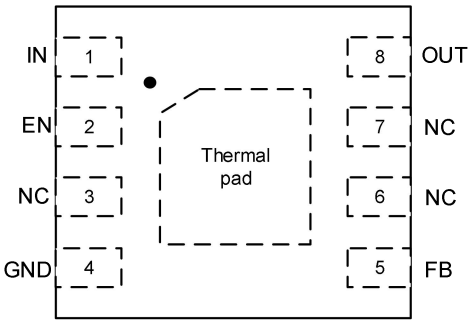

Adjustable
DFN3*3-8 (Top view)
DIA7855BADJCD8

© 2023 DIOO MICROCIRCUITS CO., LTD.

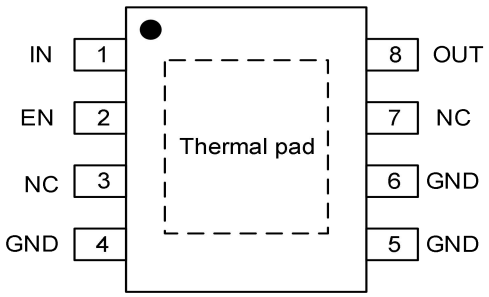

Fixed
EP-MSOP8 (Top view)
DIA7855BaaXM8

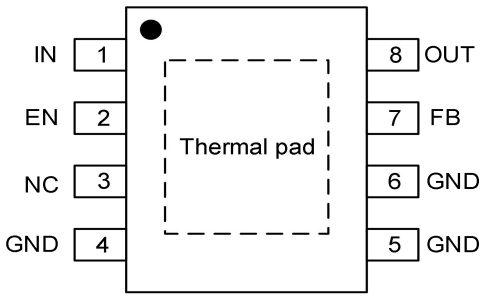

Adjustable
EP-MSOP8 (Top view)
DIA7855BADJXM8

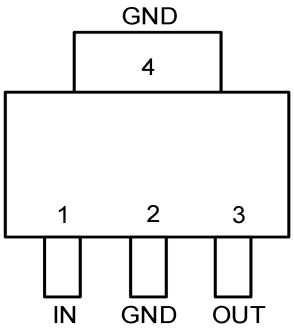

Fixed
SOT-223 (Top view)
DIA7855BaaTD3

Name	Description
OUT	Regulated output voltage. The output should be bypassed with a small 1 μF ceramic capacitor.
FB	Feedback input pin, regulated to 0.65 V nominally. Connected to an external resistive divider between OUT and GND to set output voltage.
EN	Enable pin. This pin has an internal pull-down resistor. A logic low reduces the supply current to less than 1 μA. Connect to logic “High” for normal operation.
GND	Power supply ground.
IN	Input voltage supply pin.
NC	Not internally connected.
Thermal pad	No connection.

© 2023 DIOO MICROCIRCUITS CO., LTD.

2. Absolute Maximum Ratings

Exceeding the maximum ratings listed under Absolute Maximum Ratings when designing is likely to damage the device permanently. Do not design to the maximum limits because long-time exposure to them might impact the device's reliability. The ratings are obtained over an operating free-air temperature range unless otherwise specified.

Symbol	Parameter	Rating	Unit
V_{IN}	Unregulated input(1)	-0.3 to 45	V
V_{EN}	Enable input(1)	-0.3 to V_{IN}	V
V_{OUT}	Output voltage (fixed)	-0.3 to 6	V
	Output voltage (adjustable)	-0.3 to 20	
V_{FB}	FB input voltage	-0.3 to 6	V
T_J	Junction temperature	-40 to 150	°C
T_{STG}	Storage temperature	150	°C

Note:

(1) Absolute maximum voltage, withstand 45 V for 200 ms.

3. Recommended Operating Condition

Recommended operating conditions are specified to ensure optimal performance to the datasheet specifications. The ratings are obtained over an operating free-air temperature range unless otherwise specified.

Symbol	Parameter	Ratings	Unit
V_{IN}	Unregulated input voltage	3 to 40	V
V_{EN}	Enable input voltage	0 to V_{IN}	V
C_{OUT}	Output capacitor requirements(1)	1 to 200	μF
ESR	Output capacitor equivalent series resistance requirements(2)	0.001 to 5	Ω
T_A	Ambient temperature	-40 to 125	°C

Note:

(1) All voltage values are with respect to GND.

(2) Absolute maximum voltage, withstand 45 V for 200 ms.

© 2023 DIOO MICROCIRCUITS CO., LTD.

4. Thermal Considerations

The thermal resistance determines the heat insulation property of a material. The higher the thermal resistance is, the lower the heat loss. Accumulation of heat energy degrades the performance of semiconductor components.

Symbol	Metric		Value	Unit
$R_{\theta JA}$	Junction-to-ambient thermal resistance	DFN2*2-6	72.8	°C/W
		EP-MSOP8	63.9	°C/W
		DFN3*3-8	48	°C/W
		SOT-223	64.2	°C/W
$R_{\theta JC(top)}$	Junction-to-case (top) thermal resistance	DFN2*2-6	85.8	°C/W
		EP-MSOP8	50.2	°C/W
		DFN3*3-8	11	°C/W
		SOT-223	46.8	°C/W

5. Electrical Characteristics

V_{IN} = 14 V, 10 μF ceramic output capacitor, T_A = -40°C to 125°C, over operating ambient temperature range (unless otherwise noted).

Symbol	Parameter	Test Conditions	Min	Typ	Max	Unit
V_{IN}	Input voltage		$V_{OUT(NOM)}$ + $V_{Dropout}$		40	V
I_{SD}	Shutdown current	EN = 0 V		0.45	1	μA
I_Q	Quiescent current	V_{IN} = 6 V to 40 V, EN ≥ 2 V, I_{OUT} = 0 mA		4	8	μA
$V_{IN, UVLO}$	V_{IN} undervoltage detection	Ramp V_{IN} down until the output turns OFF			2.9	V
		Hysteresis		200		mV
V_{IL}	Logic-input low level				0.6	V
V_{IH}	Logic-input high level		1.2			V
V_{OUT}	Output accuracy	I_{OUT} = 10 mA	–2		2	%
V_{FB}	Reference voltage (adjustable voltage version)		0.64	0.65	0.66	V
$V_{Line-Reg}$	Line regulation	V_{IN} = 6 V to 40 V, I_{OUT} = 10 mA			10	mV
$V_{Load-Reg}$	Load regulation	V_{IN} = 14 V, I_{OUT} = 1 mA to 150 mA			10	mV

© 2023 DIOO MICROCIRCUITS CO., LTD.

$V_{Dropout}$	Dropout voltage	I_{OUT} = 150 mA, V_{OUT} = 5 V		210	400	mV
I_{OUT}	Output current	V_{OUT} in regulation	0		150	mA
I_{CL}	Output current limit	V_{OUT} short to 90% × V_{OUT}	160		450	mA
PSRR	Power-supply ripple rejection	$V_{(Ripple)}$ = 0.2 V_{PP}, I_{OUT} = 10 mA, frequency = 1 kHz, C_{OUT} = 1 µF		45		dB
		$V_{(Ripple)}$ = 0.2 V_{PP}, I_{OUT} = 10 mA, frequency = 10 kHz, C_{OUT} = 1 µF		48		
T_{SD}	Junction shutdown temperature			155		°C
T_{HYST}	Hysteresis of thermal shutdown			35		°C

Note:

(1) Specification subject to change without notice.

© 2023 DIOO MICROCIRCUITS CO., LTD.

6. Typical Characteristics

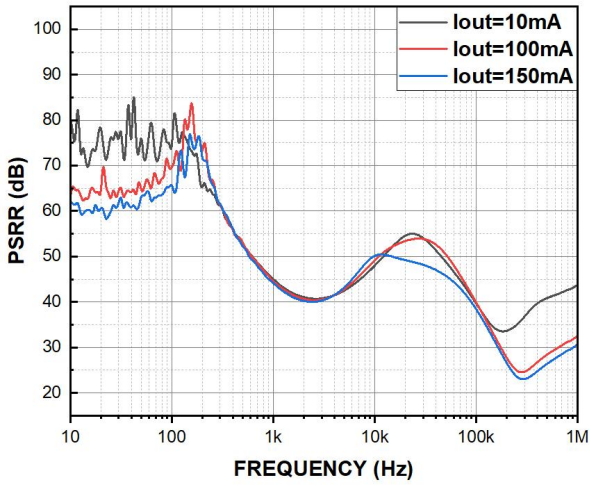

V_{IN} = 6 V, V_{OUT} = 5 V, C_{OUT} = 1 µF

Figure 1. PSRR vs. Output and I_L

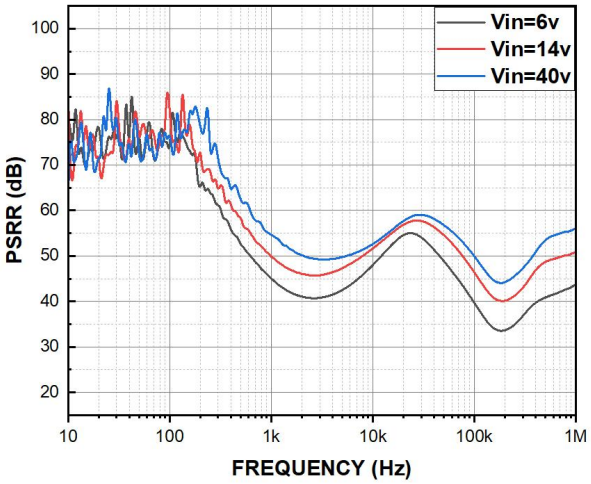

V_{OUT} = 5 V, I_L = 10 mA, C_{OUT} = 1 µF

Figure 2. PSRR vs. Frequency

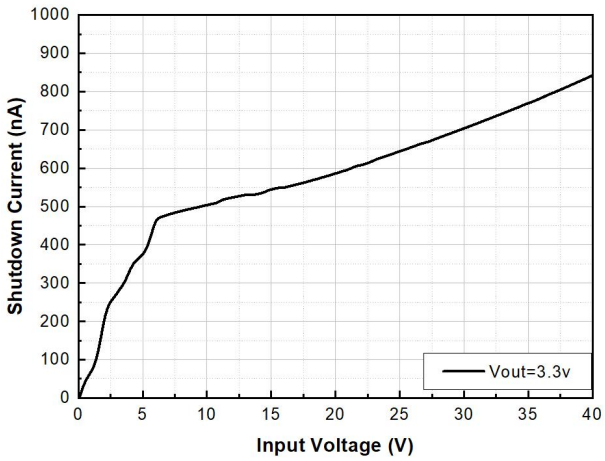

Figure 3. Shutdown current vs. Input voltage

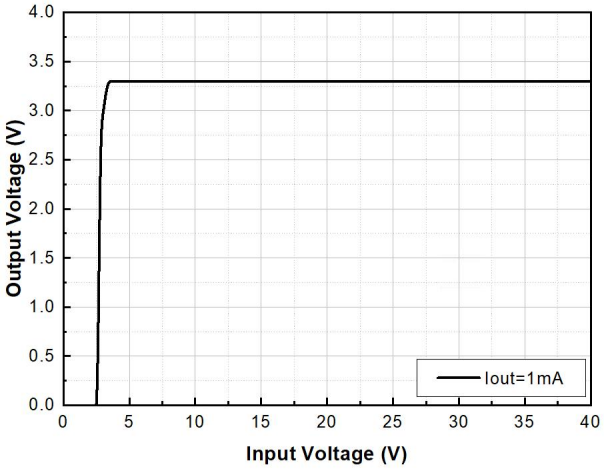

Figure 4. Output voltage vs. Input voltage at V_{OUT} = 3.3 V

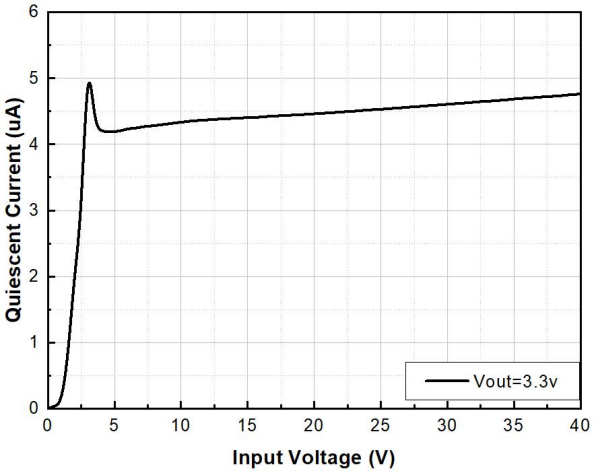

Figure 5. Quiescent current vs. Input voltage

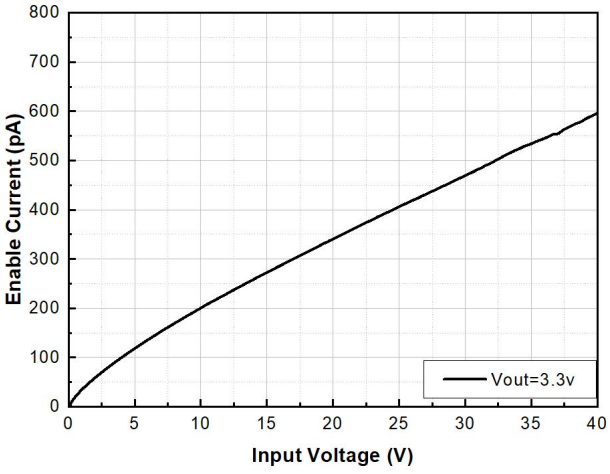

Figure 6. Enable current vs. Input voltage

© 2023 DIOO MICROCIRCUITS CO., LTD.

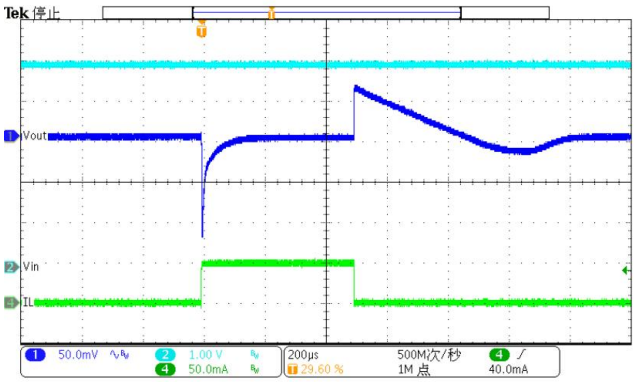

V_{IN} = V_{EN} = 5 V, V_{OUT} = 3.3 V, C_{OUT} = 1 µF,

0.1 mA to 50 mA, edge speed at 1 µs

Figure 7. Load transient

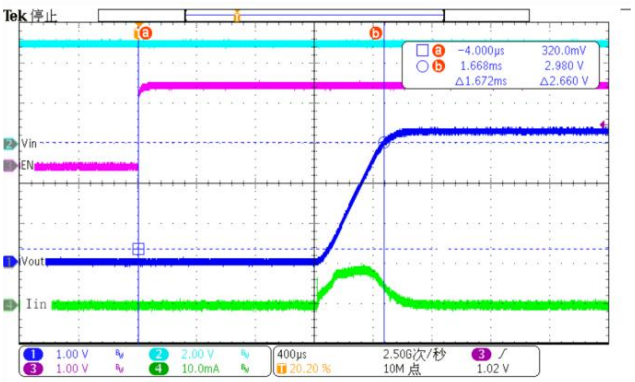

V_{IN} = 4.3 V, V_{EN} = 2 V, V_{OUT} = 3.3 V,

C_{IN} = C_{OUT} = 1 µF, I_L = 0 mA

Figure 8. Turn-on time

 © 2023 DIOO MICROCIRCUITS CO., LTD.

7. Block Diagram

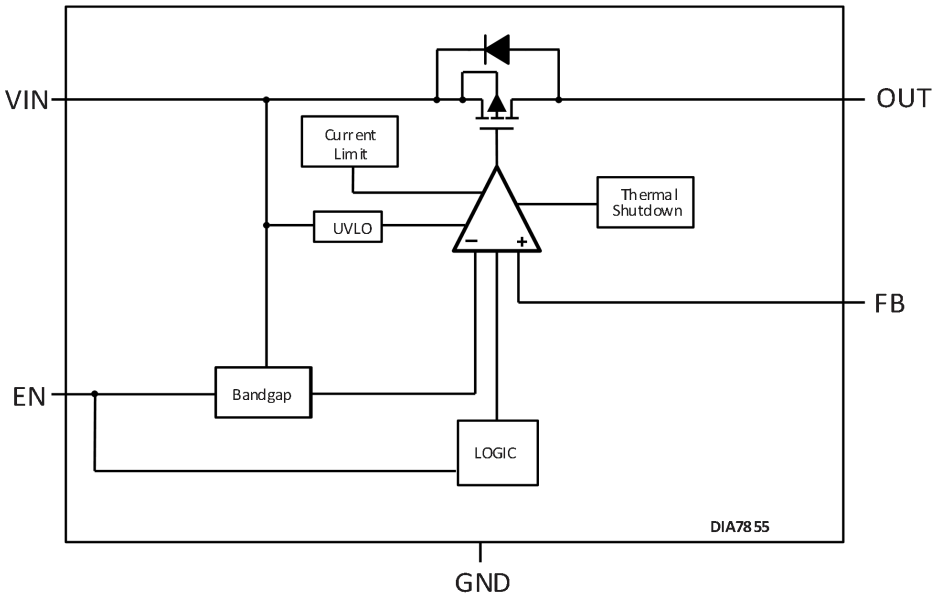

Figure 9. Block diagram - adjustable version

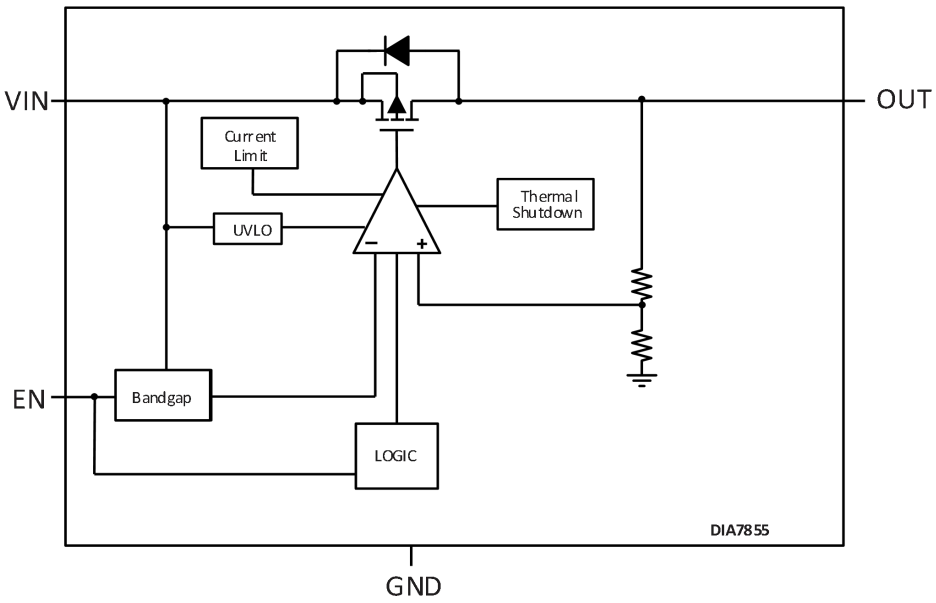

Figure 10. Block diagram - fixed version

© 2023 DIOO MICROCIRCUITS CO., LTD.

8. Function Description

8.1. Overview

The DIA7855 is a low-dropout linear regulator designed to function with an input voltage range from 3 V to 40 V and provides 45 V load dump protection. The standby system for its typical quiescent current at no load is only 4 μA, which is designed for the automotive always-on application.

8.2. Device enable (EN)

The device can be enabled and disabled by the EN pin. The EN pin is a high-voltage tolerant pin. A high input turns the regulation on and activates the device. To enable and disable the device, connect this pin to an external microcontroller or a digital circuit, or connect to the IN pin for self-bias applications.

8.3. Undervoltage shutdown

The DIA7855 will be shut down if the input voltage (V_{IN}) falls below an internal UVLO threshold (V_{UVLO}). In the event that the input voltage drops below UVLO threshold and recovers, as soon as the voltage returns to the proper range, the regulator shuts down and powers up with a normal power-up sequence. Ensure that the regulator does not latch into an unknown state during low-input-voltage conditions. The regulator shuts down and powers up with a normal power-up sequence when the input voltage is above the required level.

8.4. Thermal shutdown

The DIA7855 is protected by a thermal shutdown (T_{SD}) circuit from overheating. The junction temperature exceeding the T_{SD} trip point causes the output to turn off, and the output will turn on again when the junction temperature falls below the T_{SD} trip point.

8.5. Operation with V_{IN} lower than 3 V

The DIA7855 can operate with input voltages above 3 V and at lower input voltages, the maximum UVLO voltage is 2.9 V, and the device does not operate at input voltages below the actual UVLO voltage.

8.6. Operation with V_{IN} higher than 3 V

When V_{IN} is higher than the output set value plus the device dropout voltage and higher than 3 V, V_{OUT} is equal to the set value. Otherwise, V_{OUT} is equal to V_{IN} minus the dropout voltage.

 © 2023 DIOO MICROCIRCUITS CO., LTD.

9. Application Information

Important notice: Validation and testing are the most reliable ways to confirm system functionality. The application information is not part of the specification and is for reference purposes only.

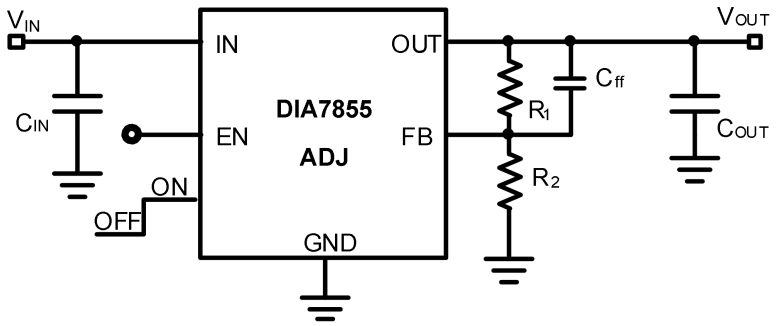

Figure 11. Typical application - adjustable version

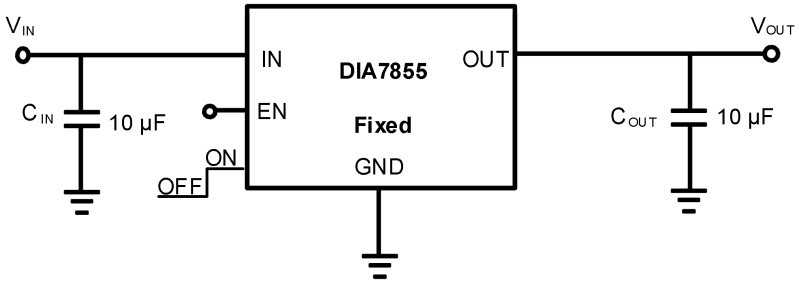

Figure 12. Typical application - fixed version

9.1. Application and implementation

The DIA7855 is a low-dropout linear regulator designed to function with an input-voltage range from 3 V to 40 V with a 45 V load dump protection.

9.2. Detailed design procedure

To begin the design process, determine the input and output voltage range and output current.

9.3. Input capacitor

The voltage rating must be greater than the maximum input voltage. An input capacitor is not required for stability. A good analog design practice is to connect a 10 µF to 22 µF capacitor from IN to GND.

9.4. Output capacitor

To better endure the stability of the DIA7855, an output capacitor with a value in the range from 1 µF to 200 µF and with an equivalent series resistance range between 0.001 Ω and 5 Ω is required. To improve the load transient response, select a ceramic capacitor with low equivalent series resistance.

 © 2023 DIOO MICROCIRCUITS CO., LTD.

10. Physical Dimensions

10.1. DFN2*2-6

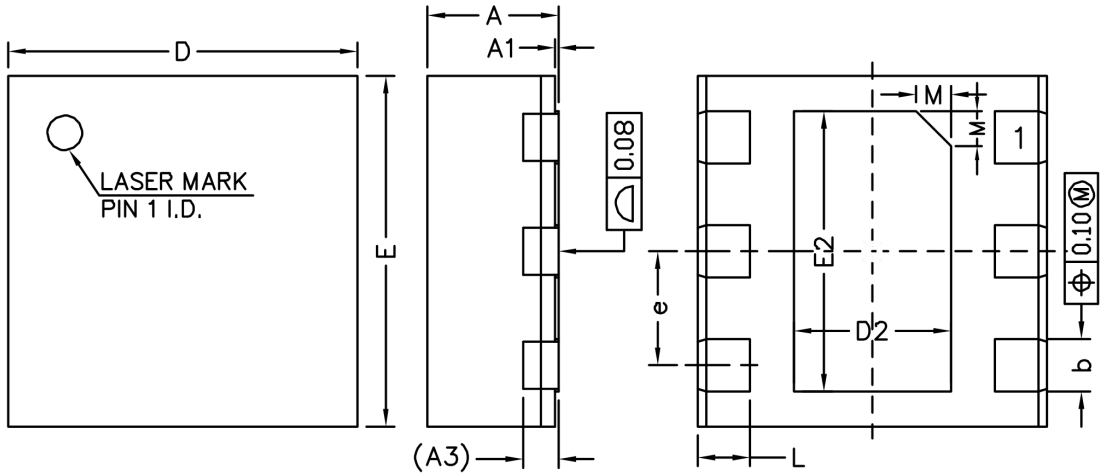

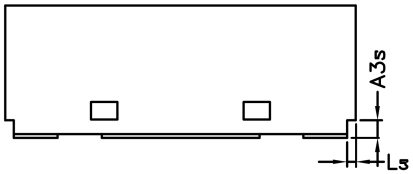

Common Dimensions (Units of measure = Millimeter)			
Symbol	**Min**	**Nom**	**Max**
A	0.70	0.75	0.80
A1	0.00	0.02	0.05
A3		0.203 REF	
A3s	0.10	-	-
b	0.25	0.30	0.35
D	1.90	2.00	2.10
E	1.90	2.00	2.10
D2	0.80	0.90	1.00
E2	1.50	1.60	1.70
e	0.55	0.65	0.75
L	0.25	0.30	0.35
Ls		0.05 REF	
M		0.20 REF	

© 2023 DIOO MICROCIRCUITS CO., LTD.

10.2. EP-MSOP-8

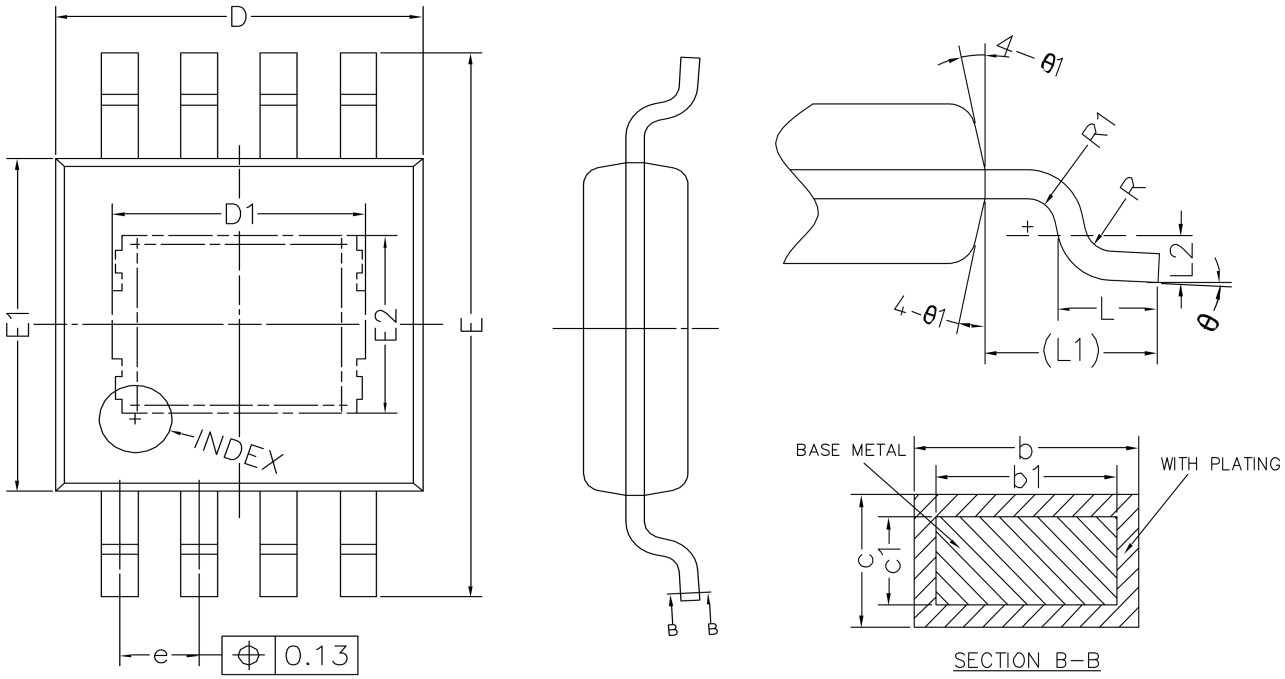

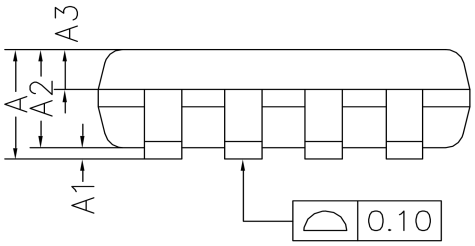

Common Dimensions (Units of measure = Millimeter)			
Symbol	**Min**	**Nom**	**Max**
A	-	-	1.10
A1	0.05	0.10	0.15
A2	0.75	0.85	0.95
A3	0.30	0.35	0.40
b	0.25	-	0.38
b1	0.24	0.30	0.33
c	0.13	-	0.20
c1	0.13	0.15	0.16
D	2.90	3.00	3.10
D1	1.92	2.07	2.22
E	4.75	4.90	5.05
E1	2.90	3.00	3.10
E2	1.45	1.60	1.75
e	0.55	0.65	0.75
L	0.40	0.55	0.70
L1	0.95 REF		
L2	0.25 BSC		
R	0.07	-	-
R1	0.07	-	-
Θ	0°	-	8°
Θ1	9°	12°	15°

© 2023 DIOO MICROCIRCUITS CO., LTD.

10.3. SOT-223

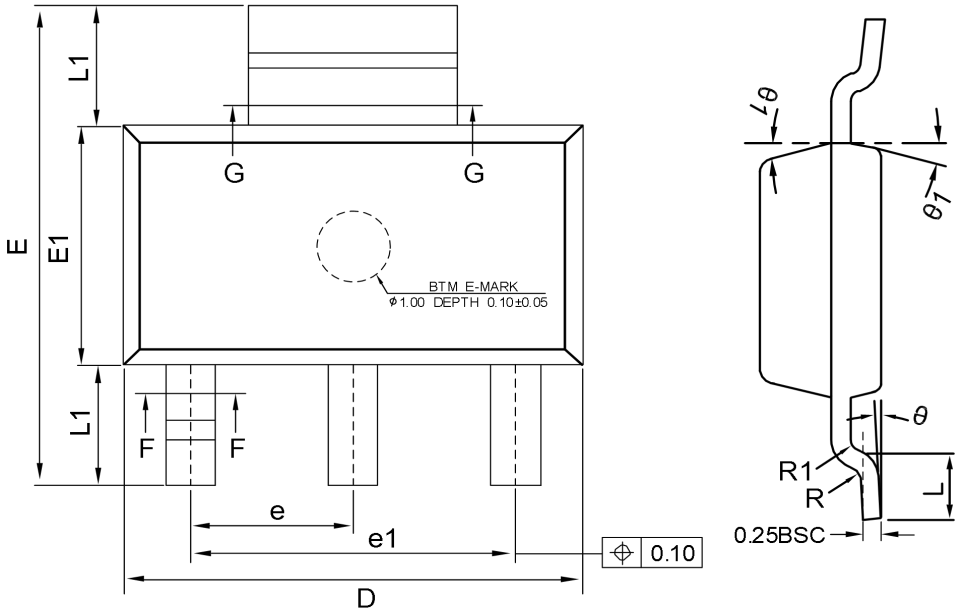

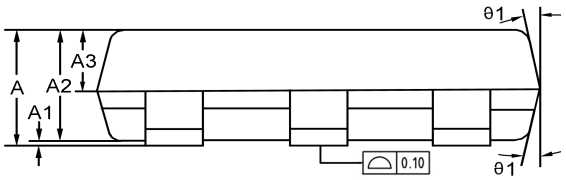

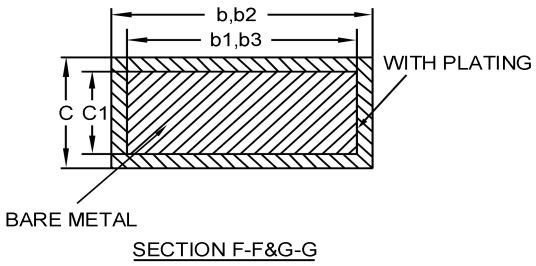

SECTION F-F&G-G

Common Dimensions (Units of measure = Millimeter)			
Symbol	**Min**	**Nom**	**Max**
A	-		1.80
A1	0.020	-	0.10
A2	1.50	1.60	1.70
A3	0.80	0.90	1.00
b	0.67	-	0.80
b1	0.66	0.71	0.76
b2	2.96	-	3.09
b3	2.95	3.00	3.05
c	0.24	-	0.35
C1	0.23	0.25	0.30
D	6.43	6.48	6.58
E	6.80	7.00	7.20
E1	3.30	3.38	3.53
e	2.25	2.30	2.35
e1	4.50	4.60	4.70
L	0.80	1.00	1.20-
L1	1.81 REF		
R	0.10	-	-
R1	0.10	-	-
Θ	0°	-	8°
Θ1	10°	12°	14°

© 2023 DIOO MICROCIRCUITS CO., LTD.

10.4. DFN3*3-8

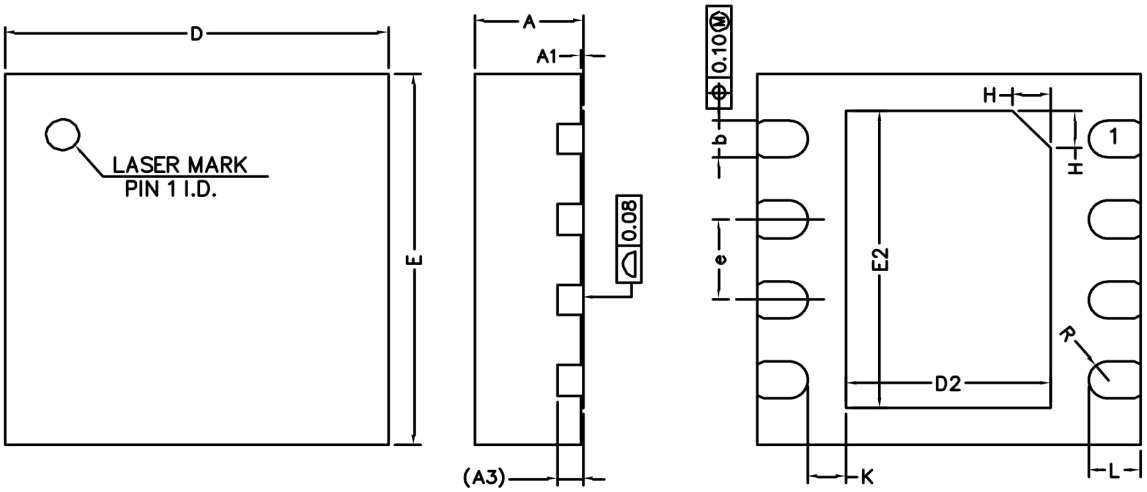



Common Dimensions (Units of measure = Millimeter)			
Symbol	**Min**	**Nom**	**Max**
A	0.80	0.85	0.90
A1	0.00	0.02	0.05
A3		0.203 REF	
b	0.25	0.30	0.35
D	2.90	3.00	3.10
E	2.90	3.00	3.10
D2	1.50	1.60	1.70
E2	2.30	2.40	2.50
e	0.55	0.65	0.75
H		0.30 REF	
K	0.20	0.30	0.40
L	0.35	0.40	0.45
R		0.15 REF	

© 2023 DIOO MICROCIRCUITS CO., LTD.

Disclaimer

This specification and information contained herein are provided on an “AS IS” basis and WITH ALL FAULTS. All product specifications, statements, information, and data (collectively, the“Information”) in this datasheet or made available on the website of www.dioo.com are subject to change without notice. The customer is responsible for checking and verifying the extent to which the Information contained in this publication is applicable to his/her application. All Information given herein is believed to be accurate and reliable, but it is presented without guarantee, warranty, or responsibility of any kind, express or implied.

 © 2023 DIOO MICROCIRCUITS CO., LTD.