500 mA, High-Accuracy LDO with Power-Good for Automotive Application

Features

- AEC-Q100 qualified:
  - Device ambient temperature: -40°C ≤ T_A ≤ 125°C
  - Device junction temperature: -40°C ≤ T_J ≤ 150°C
- Operating input voltage range: 1.7 V to 6.0 V
- Operating output voltage range:
  - Fixed options: 0.65 V to 5.0 V
  - Adjustable option: 0.55 V to 5.5 V
- High PSRR: 64 dB at 1 kHz
- Power-good output options:
  - Open-drain:DIA7976AO and DIA7976BO
  - Push-pull: DIA7976AP and DIA7976BP
- Output accuracy:
  - ±1% at T_A = 25°C
  - ±1.5% at -40°C ≤ T_A ≤ 85°C
  - ±2% at -40°C ≤ T_A≤ 125°C
- Ultra-low dropout:
  - 150 mV at 500 mA, V_{OUT} = 3.3 V
- Low quiescent current：
  - 27 μA typical at no load
  - 100 nA shutdown mode typical current
- Active output discharge: DIA7976A
- Stable with a 1 μF or larger capacitor

Applications

- Automotive head units
- Front and rear cameras
- Automotive cluster displays
- Telematics control units
- Medium, short range radar

Package Information

Part Number	Package	Body Size
DIA7976	DFN6	2 mm × 2 mm
	DFN8	3 mm × 3 mm
	SOT23-5	2.9 mm × 1.6 mm

Description

The DIA7976 is a 500 mA ultra-low-dropout regulator with power-good function. The DIA7976 is designed for applications requiring low quiescent current and provides fast line and load transient performance. Additionally, DIA7976 features high Power Supply Ripple Rejection (PSRR) at up to 500 mA.

The DIA7976 operates with an input voltage range from 1.7 V to 6.0 V and the output voltage is adjustable from 0.55 V to 5.5 V.

The DIA7976 is stable with small ceramic output capacitors, allowing for a small overall solution size. An error amplifier and precision band-gap provide an accuracy of ±2% over temperature. The DIA7976 helps reduce the thermal dissipation during short-circuit events with internal short-current limit. The device also contains integrated thermal shutdown, current limit, and undervoltage lockout (UVLO) features.

Simplified Schematic

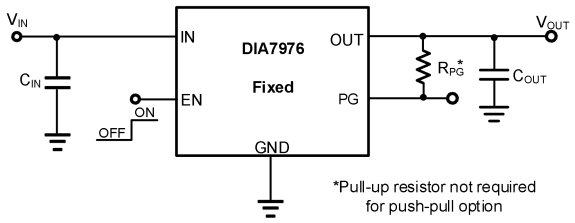

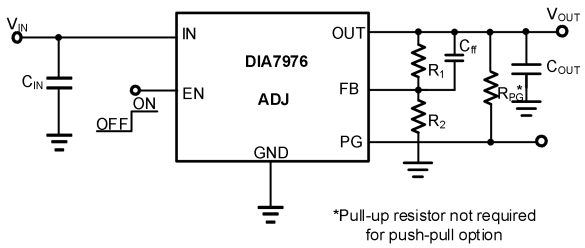

© 2023 DIOO MICROCIRCUITS CO., LTD.

Ordering Information

Ordering Part NO.	Top Marking	MSL	Description	RoHS	T_A	Package	
DIA7976AOaaCD6	YWXZ GF5XO	1	Active Discharge	Green	-40 to 125°C	DFN2*2-6	Tape & Reel, 3000
DIA7976APaaCD6	YWXZ GF5XP	1		Green	-40 to 125°C	DFN2*2-6	Tape & Reel, 3000
DIA7976AOaaCD8	YWXZ GF5XO	1		Green	-40 to 125°C	DFN3*3-8	Tape & Reel, 3000
DIA7976APaaCD8	YWXZ GF5XP	1		Green	-40 to 125°C	DFN3*3-8	Tape & Reel, 3000
DIA7976AaaST5	A5XYW	1		Green	-40 to 125°C	SOT23-5	Tape & Reel, 3000
DIA7976AOADJCD6	YWXZ GF5XO	1		Green	-40 to 125°C	DFN2*2-6	Tape & Reel, 3000
DIA7976APADJCD6	YWXZ GF5XP	1		Green	-40 to 125°C	DFN2*2-6	Tape & Reel, 3000
DIA7976AOADJCD8	YWXZ GF5XO	1		Green	-40 to 125°C	DFN3*3-8	Tape & Reel, 3000
DIA7976APADJCD8	YWXZ GF5XP	1		Green	-40 to 125°C	DFN3*3-8	Tape & Reel, 3000
DIA7976AADJST5	A5XYW	1		Green	-40 to 125°C	SOT23-5	Tape & Reel, 3000
DIA7976BOaaCD6	YWXZ GF7XO	1	Non-Active Discharge	Green	-40 to 125°C	DFN2*2-6	Tape & Reel, 3000
DIA7976BPaaCD6	YWXZ GF7XP	1		Green	-40 to 125°C	DFN2*2-6	Tape & Reel, 3000
DIA7976BOaaCD8	YWXZ GF7XO	1		Green	-40 to 125°C	DFN3*3-8	Tape & Reel, 3000
DIA7976BPaaCD8	YWXZ GF7XP	1		Green	-40 to 125°C	DFN3*3-8	Tape & Reel, 3000
DIA7976BaaST5	A7XYW	1		Green	-40 to 125°C	SOT23-5	Tape & Reel, 3000
DIA7976BOADJCD6	YWXZ GF7XO	1		Green	-40 to 125°C	DFN2*2-6	Tape & Reel, 3000
DIA7976BPADJCD6	YWXZ GF7XP	1		Green	-40 to 125°C	DFN2*2-6	Tape & Reel, 3000
DIA7976BOADJCD8	YWXZ GF7XO	1		Green	-40 to 125°C	DFN3*3-8	Tape & Reel, 3000
DIA7976BPADJCD8	YWXZ GF7XP	1		Green	-40 to 125°C	DFN3*3-8	Tape & Reel, 3000
DIA7976BADJST5	A7XYW	1		Green	-40 to 125°C	SOT23-5	Tape & Reel, 3000

© 2023 DIOO MICROCIRCUITS CO., LTD.

Output Voltage Options											
Option Code "**aa**"	**08**	**10**	**11**	**12**	**15**	**18**	**25**	**28**	**30**	**33**	**50**
Voltage	0.8 V	1.0 V	1.1 V	1.2 V	1.5 V	1.8 V	2.5 V	2.8 V	3 V	3.3 V	5.0 V

Marking Definition: GF5XO/GF5XP/A5XYW/GF7XO/GF7XP/A7XYW	
YWXZ	YWXZ: Year code; Week code; Factory code; Internal code
GF5XO	GF: Product code; 5: Product code; X: Voltage code; O: Open-drain version.
GF5XP	GF: Product code; 5: Product code; X: Voltage code; O: Push-pull version.
A5XYW	A: Product code; 5: Product code; X: Voltage code; Y: Year code; W: Week code.
GF7XO	GF: Product code; 7: Product code; X: Voltage code; O: Open-drain version.
GF7XP	GF: Product code; 7: Product code; X: Voltage code; P: Push-pull version.
A7XYW	A: Product code; 7: Product code; X: Voltage code; Y: Year code; W: Week code.

Voltage Code											
Option Code "X"	C	D	E	F	G	H	J	K	L	M	P	Q
Voltage	0.8 V	1.0 V	1.1 V	1.2 V	1.5 V	1.8 V	2.5 V	2.8 V	3 V	3.3 V	5.0 V	ADJ

If you encounter any issue in the process of using the device, please contact our customer service at marketing@dioo.com or phone us at (+86)-21-62116882. If you have any improvement suggestions regarding the datasheet, we encourage you to contact our technical writing team at docs@dioo.com. Your feedback is invaluable for us to provide a better user experience.

© 2023 DIOO MICROCIRCUITS CO., LTD.

Table of Contents

1.Pin Assignment and Functions 1
2.Absolute Maximum Ratings 3
3.Recommended Operating Condition 3
4.ESD Ratings 4
5.Electrical Characteristics 5
6.Typical Characteristics 7
7. Block Diagram 9
8. Function Description 11
8.1.Overview 11
8.2.Undervoltage lockout (UVLO) 11
8.3.Shutdown 11
8.4.Current limit 11
8.5.Thermal shutdown 12
8.6.Device functional modes 13
8.7.Dropout operation 13
8.8.Disabled 13
9. Application Information 14
9.1.Application examples 14
9.2.Adjustable device feedback resistors 15
9.3.Dropout voltage 15
9.4.Exiting dropout 16
10. Physical Dimensions 17
10.1.DFN2*2-6 17
10.2.DFN3*3-8 18
10.3.SOT23-5 19

 © 2023 DIOO MICROCIRCUITS CO., LTD.

List of Figures

Figure 1. Line transient 7
Figure 2. Load transient 7
Figure 3. Start up with EN 7
Figure 4. Power up with V_{IN} 7
Figure 5. Dropout voltage vs. I_{OUT} at V_{OUT} = 3.3 V 7
Figure 6. Dropout voltage vs. I_{OUT} at V_{OUT} = 5.5 V 7
Figure 7. I_{GND} vs. V_{IN} 8
Figure 8. PSRR vs. Frequency and I_{OUT} 8
Figure 9. Adjustable version with open-drain power-good 9
Figure 10. Adjustable version with push-pull power-good 9
Figure 11. Fixed voltage version with open-drain power-good 10
Figure 12. Fixed voltage version with push-pull power-good 10
Figure 13. Current limit 12
Figure 14. Typical application: adjustable voltage 14
Figure 15. Typical application: fixed voltage 14
Figure 16. Start-up into dropout 16

List of Tables

Table 1. Device functional modes 13

 © 2023 DIOO MICROCIRCUITS CO., LTD.

1. 1.Pin Assignment and Functions

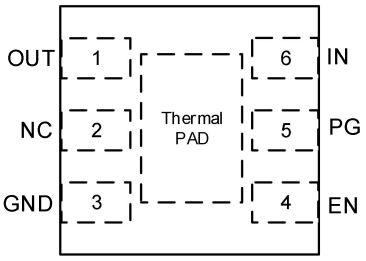

Fixed

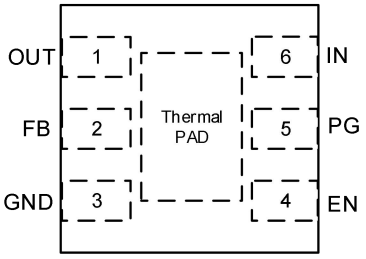

Adjustable

DFN2*2-6

Top view

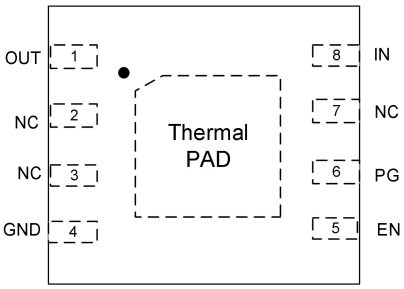

Fixed

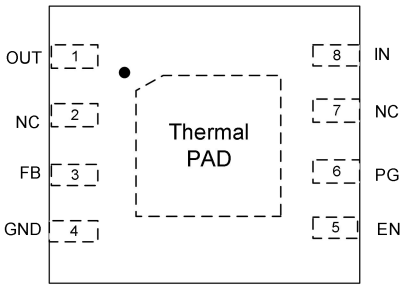

Adjustable

DFN3*3-8

Top view

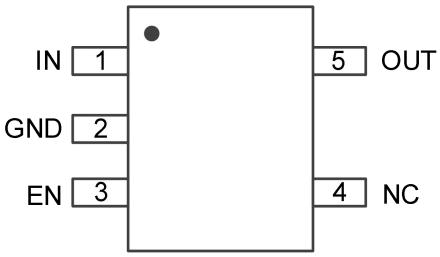

Fixed

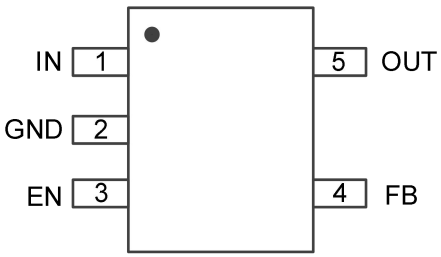

Adjustable

SOT23-5

Top view

 © 2023 DIOO MICROCIRCUITS CO., LTD.

Pin Name	Description
EN	Enable pin. Drive EN greater than $V_{EN(HI)}$ to turn on the regulator. Drive EN less than $V_{EN(LO)}$ to put the low-dropout regulator (LDO) into shutdown mode.
FB	This pin is used as an input to the control loop error amplifier and is used to set the output voltage of the LDO.
GND	Ground pin.
IN	Input pin. For best transient response and to minimize input impedance, use the recommended value or larger ceramic capacitor from IN to ground as listed in the Recommended Operating Conditions table. Place the input capacitor as close to the output of the device as possible.
NC	No internal connection. Ground this pin for better thermal performance.
OUT	Regulated output voltage pin. A capacitor is required from OUT to ground for stability. For best transient response, use the nominal recommended value or larger ceramic capacitor from OUT to ground; Place the output capacitor as close to the output of the device as possible.
PG	Power-good output. Available in open-drain and push-pull topologies. A pull-up resistor is only required for the open-drain type. For the open-drain version (DIA7976AO and DIA7976BO), if the power-good functionality is not being used, ground this pin or leave floating. For the push-pull version (DIA7976AP and DIA7976BP), if the power-good functionality is not being used, leave this pin floating.
Thermal Pad	The thermal pad is left floating. Connect to the GND plane for improved thermal performance.

 © 2023 DIOO MICROCIRCUITS CO., LTD.

2.Absolute Maximum Ratings

Exceeding the maximum ratings listed under Absolute Maximum Ratings when designing is likely to damage the device permanently. Do not design to the maximum limits because long-time exposure to them might impact the device's reliability. The ratings are obtained over an operating free-air temperature range unless otherwise specified.

Symbol	Parameter	Rating	Unit
V_{IN}	Supply voltage	-0.3 to 6.6	V
V_{EN}	Enable voltage	-0.3 to 6.6	
V_{FB}	Feedback voltage	-0.3 to 2	
V_{PG}	Power-good voltage	-0.3 to 6.6	
V_{OUT}	Output voltage	-0.3 to V_{IN} + 0.3(1)	
I_{OUT}	Output current	Internally limited	
I_{PG}	Power-good current	-10 to 10	mA
T_J	Operating junction temperature	-40 to 150	°C
T_{STG}	Storage temperature	-65 to 150	

Note:

(1) The absolute maximum rating is V_{IN} + 0.3 V or 6.0 V, whichever is smaller.

3.Recommended Operating Condition

Recommended operating conditions are specified to ensure optimal performance to the datasheet specifications. The ratings are obtained over an operating free-air temperature range unless otherwise specified.

Symbol	Parameter		Rating	Unit
V_{IN}	Input voltage		1.7 to 6	V
V_{OUT}	Output voltage	Adjustable only	0.55 to 5.5	V
		Fixed only	0.65 to 5	V
I_{OUT}	Output current		0 to 500	mA
C_{IN}	Input capacitor		≥ 1	μF
C_{OUT}	Output capacitor(1)		1 to 22	μF
C_{FF}	Feed-forward capacitor		10	nF
V_{EN}	Enable voltage		0 to 6	V
V_{PG}	PG voltage		0 to 6	V
T_J	Junction operating temperature		-40 to 150	°C

Note:

(1) Minimum derated capacitance of 0.47 μF is required for stability.

 © 2023 DIOO MICROCIRCUITS CO., LTD.

4.ESD Ratings

When a statically-charged person or object touches an electrostatic discharge sensitive device, the electrostatic charge might be drained through sensitive circuitry in the device. If the electrostatic discharge possesses sufficient energy, damage might occur to the device due to localized overheating.

Symbol	Condition	Value	Unit
HBM	JEDEC JS-001	±4000	V
CDM	JEDEC JS-002	±2000	

 © 2023 DIOO MICROCIRCUITS CO., LTD.

5.Electrical Characteristics

At operating temperature range (T_A = -40°C to 125°C), V_{IN} = $V_{OUT(NOM)}$ + V_{DO} or 1.7 V (whichever is greater), I_{OUT} = 1 mA, V_{EN} = V_{IN}, and C_{IN} = C_{OUT} = 1 μF, unless otherwise noted; all typical values are at T_A = 25°C.

Symbol	Parameter	Test Conditions		Min	Typ	Max	Unit
V_{FB}	Feedback voltage	Adjustable only			0.55		V
V_{OUT}	Output accuracy(1)	T_A = 25°C		-1		1	%
		-40°C ≤ T_A ≤ 85°C		-1.5		1.5	%
		-40°C ≤ T_A ≤ 125°C		-2.0		2.0	%
$Line_{Reg}$	Line regulation	$V_{OUT(NOM)}$ + V_{DO} ≤ V_{IN}(2) ≤ 6.0 V			0.1	0.3	%/V
$Load_{Reg}$	Load regulation	0.1 mA ≤ I_{OUT} ≤ 500 mA, V_{IN} ≥ 2.0 V			0.04		V/A
I_Q	Quiescent current	I_{OUT} = 0 mA	T_A = 25°C		27	45	μA
			-40°C ≤ T_A ≤ 125°C		27	50	
I_{SHDN}	Shutdown current	V_{EN} ≤ 0.3 V, 1.7 V ≤ V_{IN} ≤ 6.0 V, -40°C ≤ T_A ≤ 125°C			0.1	1	μA
I_{FB}	Feedback pin current	Adjustable only			0.01	0.1	μA
I_{CL}	Output current limit	$V_{OUT(NOM)}$ < 1.0 V, V_{OUT} = $V_{OUT(NOM)}$ - 0.2 V, V_{IN} = 2.0 V		515	720	1000	mA
		$V_{OUT(NOM)}$ ≥ 1.0 V, V_{OUT} = $V_{OUT(NOM)}$ × 0.85, V_{IN} = $V_{OUT(NOM)}$ + 1.0 V					
I_{SC}	Short-circuit current limit	V_{OUT} = 0 V	$V_{OUT(NOM)}$ < 1.0 V, V_{IN} = 2.0 V	200	300	400	mA
			$V_{OUT(NOM)}$ ≥ 1.0 V, V_{IN} = $V_{OUT(NOM)}$ + 1.0 V				
V_{DO}	Dropout voltage	I_{OUT} = 500 mA, V_{OUT} = 0.95 × $V_{OUT(NOM)}$	V_{OUT} = 1 V		830		mV
			V_{OUT} = 1.2 V		650		
			V_{OUT} = 1.5 V		400		
			V_{OUT} = 1.8 V		270		
			V_{OUT} = 2.5 V		185		
			V_{OUT} = 3.3 V		150		
			V_{OUT} = 5.5 V		115		
PSRR	Power-supply rejection ratio	V_{OUT} = 0.55 V, V_{IN} = 2.0 V, I_{OUT} = 10 mA, C_{OUT} = 2.2 μF	f = 1 kHz		64		dB
			f = 100 kHz		50		
			f = 1 MHz		75		
V_N	Output noise voltage	BW = 10 Hz to 100 kHz, V_{OUT} = 0.55 V, V_{IN} = 2.0 V			40		μVRMS

© 2023 DIOO MICROCIRCUITS CO., LTD.

Symbol	Parameter	Test Conditions	Min	Typ	Max	Unit
V_{UVLO}	Undervoltage lockout	V_{IN} falling		1.27		V
		V_{IN} rising		1.32		
$V_{UVLO,HYST}$	Undervoltage lockout hysteresis	V_{IN} hysteresis		50		mV
t_{STR}	Startup time	From EN low-to-high transition to $V_{OUT} = V_{OUT(NOM)} \times 0.95$	200	450	800	μs
$V_{EN(HI)}$	EN pin high voltage	enabled	1			V
$V_{EN(LO)}$	EN pin low voltage	disabled			0.3	V
I_{EN}	Enable pin current	$V_{IN} = V_{EN} = 6.0$ V		10		nA
$R_{PULLDOWN}$	Pulldown resistance	$V_{IN} = 6.0$ V		100		Ω
PG_{HTH}	PG high threshold	V_{OUT} increasing		92		$\%V_{OUT}$
PG_{LTH}	PG low threshold	V_{OUT} decreasing		90		$\%V_{OUT}$
PG_{HYST}	PG hysteresis			2		$\%V_{OUT}$
$V_{OL(PG)}$	PG pin low-level output voltage	$V_{IN} \geq 1.7$ V, $I_{SINK} = 1.0$ mA			300	mV
		$V_{IN} \geq 2.75$ V, $I_{SINK} = 2.0$ mA				
$V_{OH(PG)}$	PG pin high-level output voltage(3)	$V_{OUT} \geq 1.0$ V, $I_{SOURCE} = 0.04$ mA	0.8 x V_{OUT}			V
		$V_{OUT} \geq 1.4$ V, $I_{SOURCE} = 0.2$ mA				
		$V_{OUT} \geq 2.5$ V, $I_{SOURCE} = 0.5$ mA				
		$V_{OUT} \geq 4.5$ V, $I_{SOURCE} = 1.0$ mA				
$I_{kg(PG)}$	PG pin leakage current(4)	$V_{OUT} > PG_{HTH}$, $V_{PG} = 6.0$ V		7	50	nA
T_{SD}	Thermal shutdown	Shutdown, temperature increasing		165		°C
		Reset, temperature decreasing		150		
t_{PGDH}	PG delay time rising	time from 92% V_{OUT} to 20% of PG(5)		165		μs
t_{PGDL}	PG delay time falling	time from 90% V_{OUT} to 80% of PG(5)		7		

Note:

(1) When the device is connected to external feedback resistors at the FB pin, external resistor tolerances are not included.

(2) $V_{IN} = 1.7$ V for $V_{OUT(NOM)} + V_{DO} < 1.7$ V.

(3) Push-pull version only. The push-pull option is supported only for $V_{OUT} \geq 1.0$ V.

(4) Open-drain version only.

(5) Output overdrive = 10%.

(6) Specifications subject to change without notice.

© 2023 DIOO MICROCIRCUITS CO., LTD.

6.Typical Characteristics

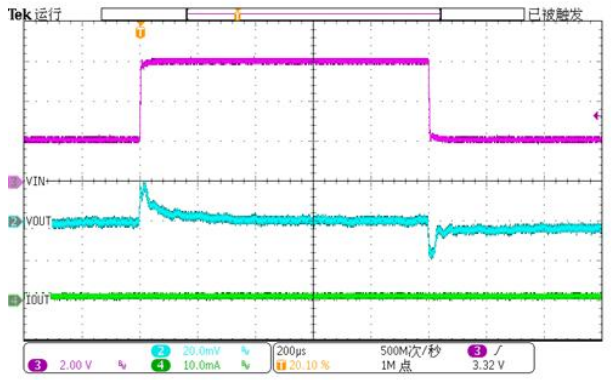

V_{OUT} = 0.55 V, V_{IN} = 2 V <-> 6 V at 1 V/µs, I_{OUT} = 1 mA

Figure 1. Line transient

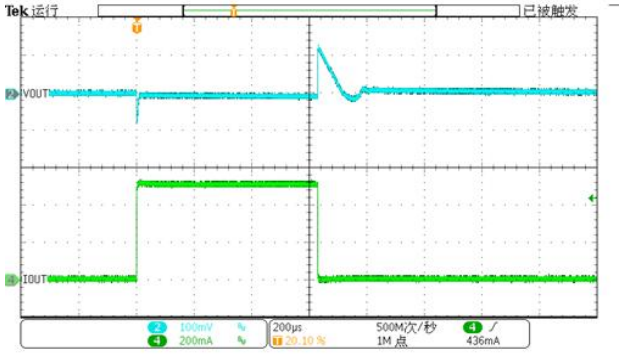

V_{IN} = 6 V, V_{OUT} = 5.5 V, 1 mA <->500 mA at 1 µs

Figure 2. Load transient

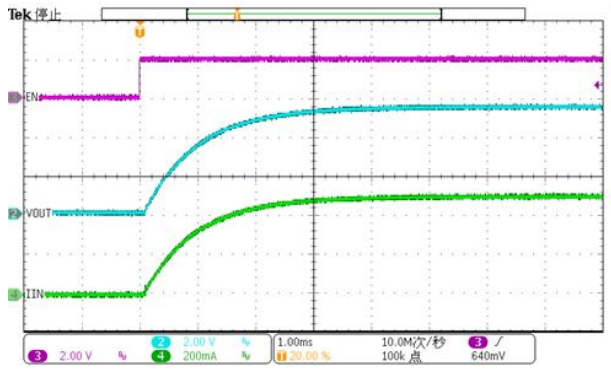

V_{IN} = 6 V, V_{OUT} = 5.5 V, I_{OUT} = 500 mA

Figure 3. Start up with EN

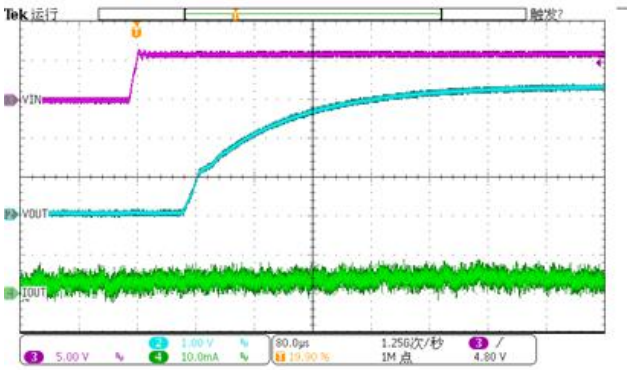

V_{IN} = 3.8 V, V_{OUT} = 3.3 V, I_{OUT} = 1 mA

Figure 4. Power up with V_{IN}

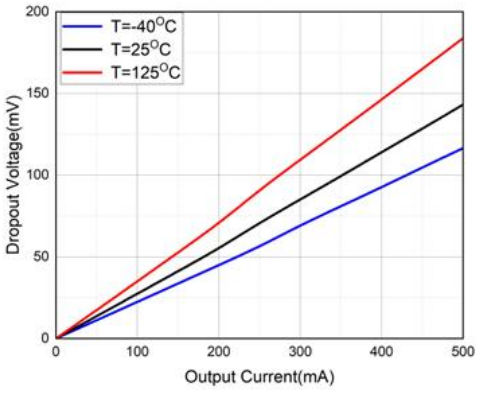

Figure 5. Dropout voltage vs. I_{OUT} at V_{OUT} = 3.3 V

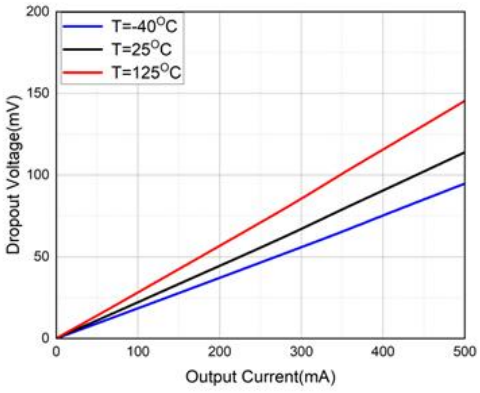

Figure 6. Dropout voltage vs. I_{OUT} at V_{OUT} = 5.5 V

 © 2023 DIOO MICROCIRCUITS CO., LTD.



V_{OUT} = 0.55 V, I_{OUT} = 0 mA

Figure 7. I_{GND} vs. V_{IN}

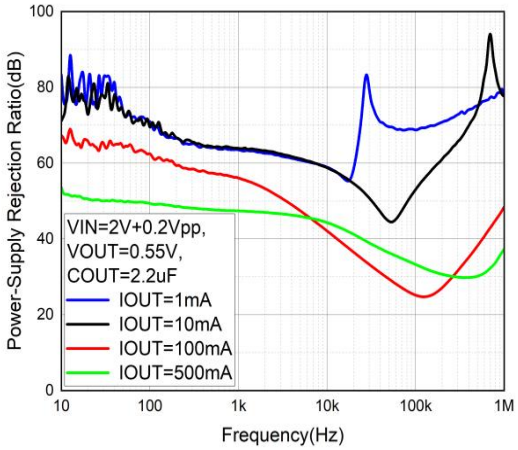

V_{IN} = 2 V, V_{OUT} = 0.55 V, C_{OUT} = 2.2 µF

Figure 8. PSRR vs. Frequency and I_{OUT}

 © 2023 DIOO MICROCIRCUITS CO., LTD.

7. Block Diagram

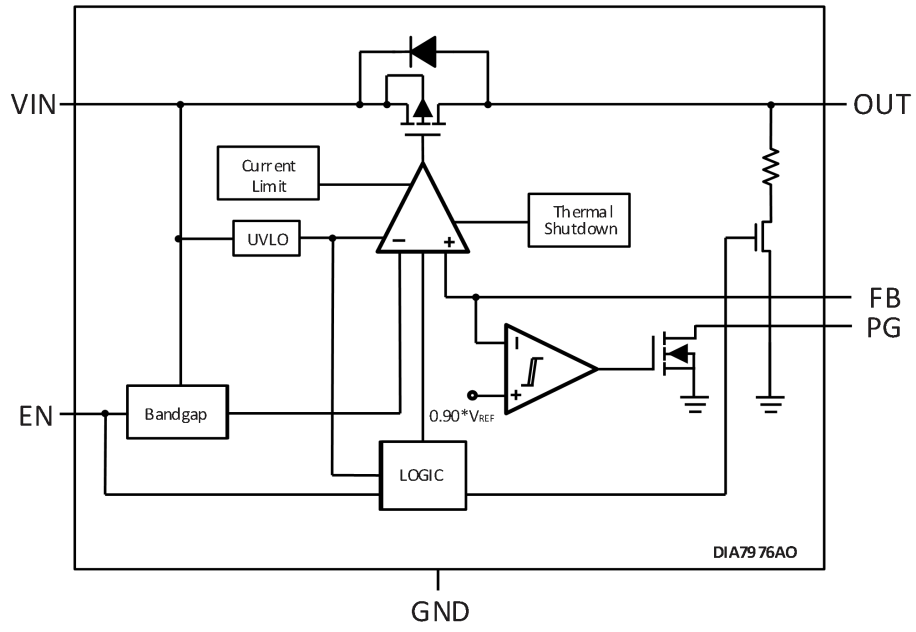

Figure 9. Adjustable version with open-drain power-good

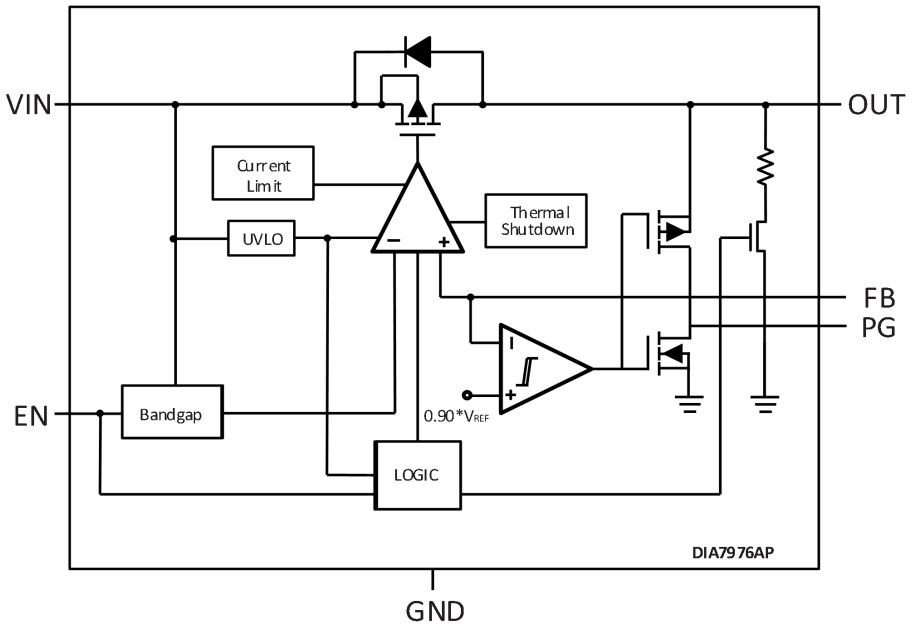

Figure 10. Adjustable version with push-pull power-good

 © 2023 DIOO MICROCIRCUITS CO., LTD.

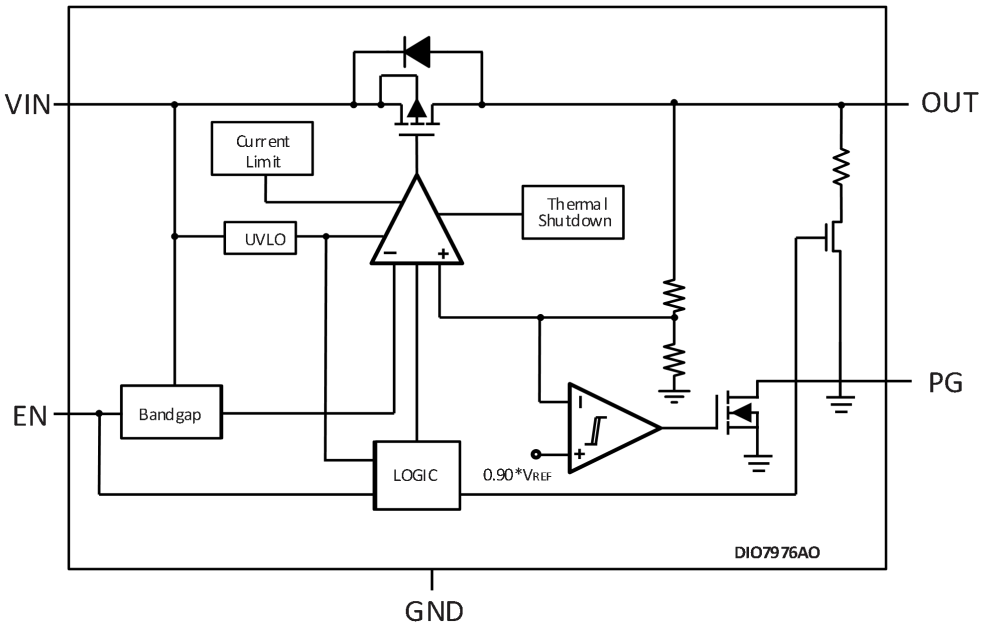

Figure 11. Fixed voltage version with open-drain power-good

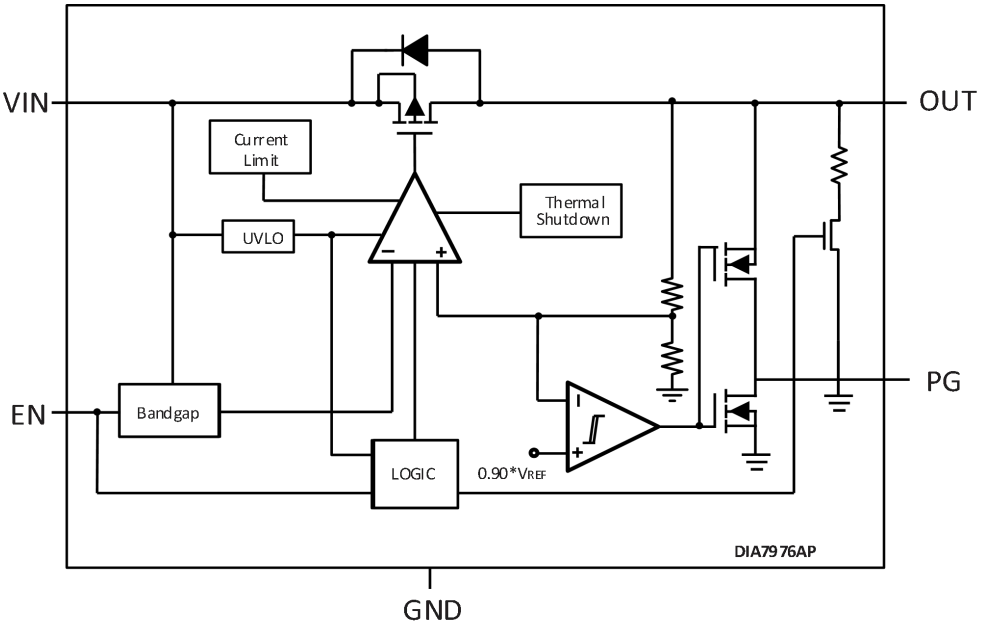

Figure 12. Fixed voltage version with push-pull power-good

 © 2023 DIOO MICROCIRCUITS CO., LTD.

8. Function Description

8.1.Overview

The DIA7976 is a low-dropout regulator (LDO) that consumes a low quiescent current and delivers an excellent line and load transient performance. These characteristics, combined with low noise and high PSRR with low dropout voltage, make this device ideal for automotive applications.

This regulator offers short-current limit, shutdown, and thermal protection. The operating junction temperature for this device is -40°C to 150°C.

8.2.Undervoltage lockout (UVLO)

The DIA7976 contains an undervoltage lockout (UVLO) circuit that ensures that the device is functional when the supply voltage is lower than the operational range of the internal circuitry, which disables the output until the input voltage is greater than the rising UVLO voltage (V_{UVLO}). When V_{IN} is less than V_{UVLO}, the output is connected to the ground with a pulldown resistor ($R_{PULLDOWN}$). When the device enters UVLO, the PG output is pulled low.

8.3.Shutdown

The enable pin (EN) is active high. Forcing the EN pin to exceed $V_{EN(HI)}$ will enable the device forcing the EN pin to drop below $V_{EN(LO)}$ will turn off the device. Connect EN to IN when shutdown capability is not required. The PG output pin is pulled low when the device is disabled. The DIA7976 has an internal pulldown MOSFET that connects an $R_{PULLDOWN}$ resistor to the ground when the device is disabled. Output capacitance (C_{OUT}) and the load resistance (R_L) in parallel with the pulldown resistor ($R_{PULLDOWN}$) decide the discharge time after disabling. The equation below calculates the time constant:

$$T = (R_{PULLDOWN} \times R_L)/(R_{PULLDOWN} + R_L) \times C_{OUT} \quad (1)$$

8.4.Current limit

The device is protected during transient high-load current faults or shorting events by an internal current limit circuit. The current limit is a hybrid scheme that transitions from a current-limit scheme to a short-limit scheme at the voltage about 0.3 V. When the output is shorted, the device supplies a typical current called the short-circuit current limit (I_{SC}). In a high-load current fault with the output voltage above 0.3 V, the current-limit scheme limits the output current to I_{CL}. When the voltage drops below 0.3 V, a short-current limit activates that scales back the current as the output voltage approaches GND.

When the device is within the current limit, the output voltage is not regulated. The device begins to heat up when a current limit event occurs, and if a thermal shutdown is triggered, the device turns off. When the device is in current-limit, the pass transistor dissipates power [(V_{IN} - V_{OUT}) × I_{CL}]. When the device output is shorted and the output is below 0.3 V, the pass transistor dissipates power [(V_{IN} - V_{OUT}) × I_{SC}]. The internal thermal shutdown circuit turns the device back on after the device cools down. The device cycles between the current limit and thermal shutdown if the output current fault condition continues.

 © 2023 DIOO MICROCIRCUITS CO., LTD.

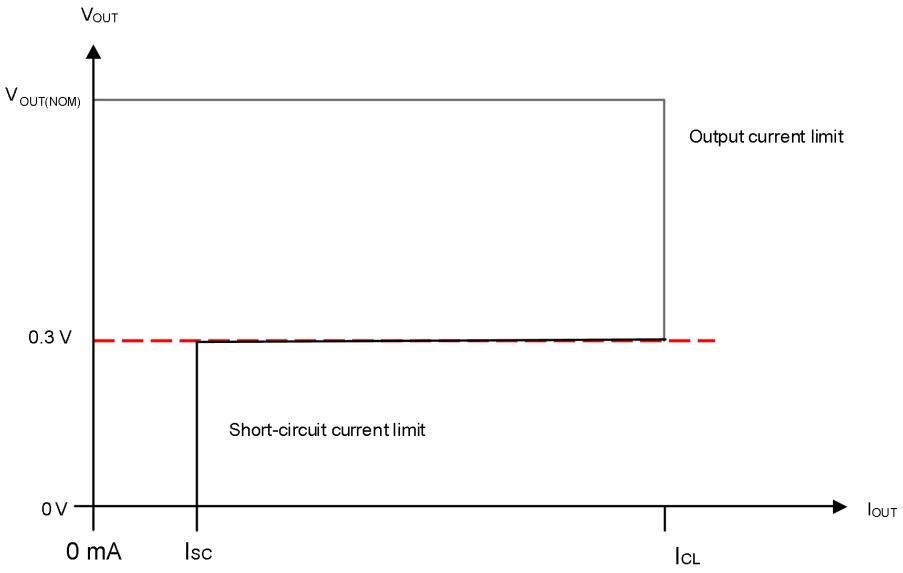

Figure 13. Current limit

8.5.Thermal shutdown

The DIA7976 has a thermal shutdown protection feature that disables the device when the junction temperature rises to approximately 165°C. This feature helps to reduce the power dissipated by the device, allowing it to cool down. When the temperature falls to approximately 150°C, the output circuitry is re-enabled. However, depending on various factors like power dissipation, thermal resistance, and ambient temperature, the thermal protection circuit may turn on and off repeatedly. This cycling helps to limit regulator dissipation and protect the regulator from overheating damage. Activating the thermal shutdown feature usually indicates excessive power dissipation as a result of the product of the (V_{IN} - V_{OUT}) voltage and the load current. For reliable operation, limit junction temperature to 150°C maximum. To estimate the margin of safety in a complete design, increase the ambient temperature until the thermal protection is triggered, use worst-case loads and signal conditions.

The DIA7976 has a built-in protection circuit that guards against overload conditions. However, it's not meant to be triggered during regular operation. Running the device continuously into thermal shutdown can harm the device's reliability.

 © 2023 DIOO MICROCIRCUITS CO., LTD.

8.6.Device functional modes

The Device Functional Mode Comparison table shows the conditions that lead to the different modes of operation.

Table 1. Device functional modes

Operating Mode	V_{IN}	V_{EN}	I_{OUT}	T_J
Normal operation	$V_{IN} > V_{OUT(nom)} + V_{DO}$ and $V_{IN} > V_{IN(min)}$	$V_{EN} > V_{EN(HI)}$	$I_{OUT} < I_{OUT(max)}$	$T_J < T_{SD(shutdown)}$
Dropout operation	$V_{IN(min)} < V_{IN} < V_{OUT(nom)} + V_{DO}$	$V_{EN} > V_{EN(HI)}$	$I_{OUT} < I_{OUT(max)}$	$T_J < T_{SD(shutdown)}$
Disabled (any true condition disables the device)	$V_{IN} < V_{UVLO}$	$V_{EN} < V_{EN(LOW)}$	Not applicable	$T_J > T_{SD(shutdown)}$

Note:

(1) See the Electrical Characteristics table for parameter values.

8.7.Dropout operation

If all conditions are met for normal operation but the input voltage is lower than the nominal output voltage plus the specified dropout voltage, the device operates in dropout mode. During dropout mode, the output voltage tracks the input voltage and the transient performance of the device becomes significantly degraded and acts as a switch Line or load transients in dropout can result in large output-voltage deviations.

When the device is in dropout, $V_{IN} < V_{OUT(NOM)} + V_{DO}$, directly after being in a normal regulation state, but not during startup, the pass transistor is driven into the ohmic or triode region. The output voltage can overshoot for a short period while the device pulls the pass transistor back into the linear region when the input voltage returns to a value greater than or equal to the nominal output voltage plus the dropout voltage ($V_{OUT(NOM)} + V_{DO}$).

8.8.Disabled

Shutting down the output of the device will require forcing the voltage of the enable pin to less than the maximum EN pin low-level input voltage. The pass transistor is turned off internal circuits are shutdown, and the output voltage is actively discharged to the ground by an internal discharge circuit from the output to the ground, when the device is disabled.

 © 2023 DIOO MICROCIRCUITS CO., LTD.

9. Application Information

Important notice: Validation and testing are the most reliable ways to confirm system functionality. The application information is not part of the specification and is for reference purposes only.

9.1. Application examples

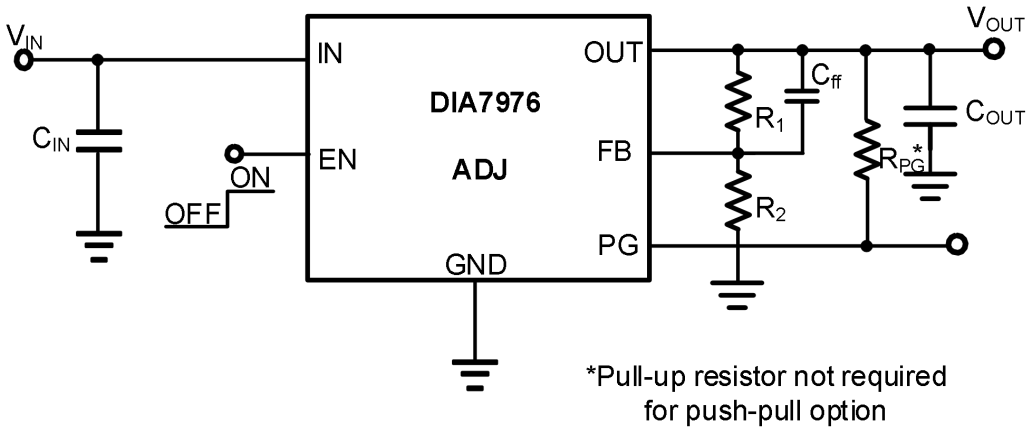

Figure 14. Typical application: adjustable voltage

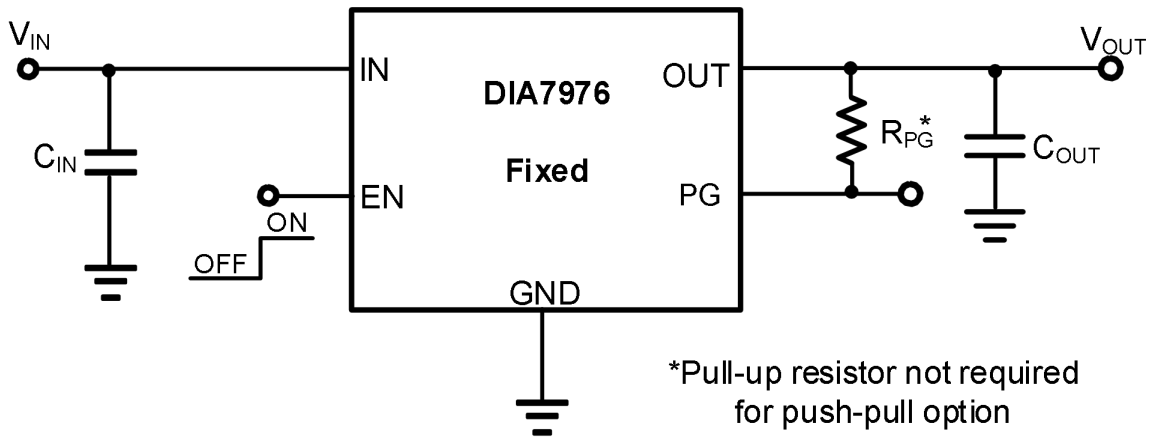

Figure 15. Typical application: fixed voltage

 © 2023 DIOO MICROCIRCUITS CO., LTD.

9.2.Adjustable device feedback resistors

Figure 14 shows that the output voltage of the DIA7976 can be adjusted from 0.55 V to 5.5 V by using a resistor divider network.

The adjustable version DIA7976 requires external feedback divider resistors to set the output voltage. The feedback divider resistors, R_1 and R_2 set the V_{OUT}, according to the following equation:

$$V_{OUT} = V_{FB} \times (1 + R_1/R_2) \quad (2)$$

Setting the feedback divider current to 100x the FB pin current listed in the Electrical Characteristics table can ignore the FB pin current error term in the V_{OUT} equation, which provides the maximum feedback divider series resistance, as shown in the following equation:

$$R_1 + R_2 \leq V_{OUT} / (I_{FB} \times 100) \quad (3)$$

9.3.Dropout voltage

A PMOS pass transistor is used to achieve low dropout. The PMOS pass device is in the linear region of operation and the input-to-output resistance is the $R_{DS(ON)}$ of the PMOS pass element when (V_{IN} - V_{OUT}) is less than the dropout voltage (V_{DO}). The PMOS device behaves like a resistor in dropout mode therefore V_{DO} scales approximately with the output current. PSRR and transient response degrade as (V_{IN} - V_{OUT}) approaches dropout operation with any linear regulator.

 © 2023 DIOO MICROCIRCUITS CO., LTD.

9.4.Exiting dropout

A ramping input supply causes an LDO to overshoot on start-up, as shown in Figure 16 when the slew rate and voltage levels are in the correct range. Use an enable signal to avoid this condition.

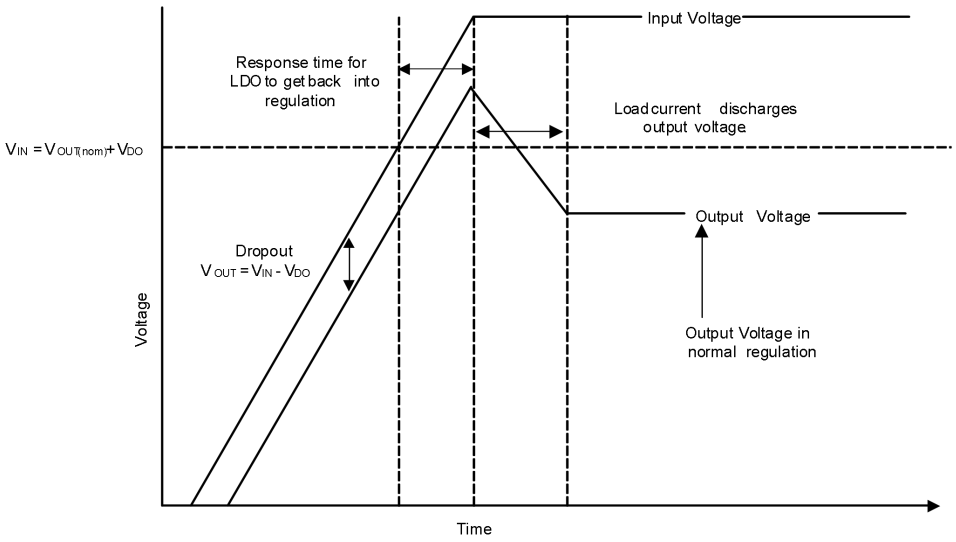

Figure 16. Start-up into dropout

Overshooting on the output of the regulator can be caused by the error amplifier having to drive the gate capacitance of the pass element and bring the gate back to the correct voltage for proper regulation. The gate voltage (V_{GS}) is pulled all the way down to the ground to give the pass device the lowest on-resistance possible when the LDO is placed in dropout. However, the output will overshoot until the loop responds and the output current pulls the output voltage back down into regulation if a line transient occurs when the device is in dropout. Continue to add input capacitance in the system until the transient is slow enough to reduce the overshoot if these transients are not acceptable.

 © 2023 DIOO MICROCIRCUITS CO., LTD.

10. Physical Dimensions

10.1.DFN2*2-6

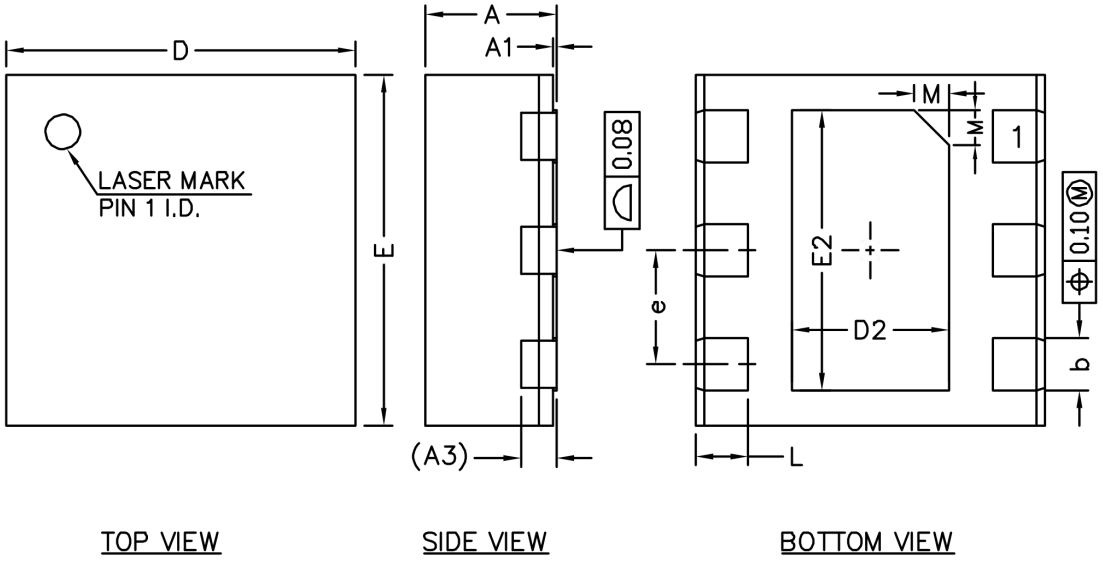

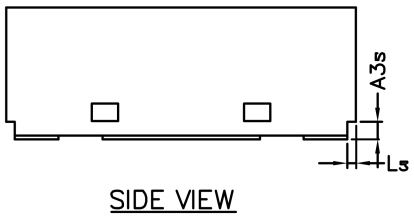

Common Dimensions (Units of measure = Millimeter)			
Symbol	**Min**	**Nom**	**Max**
A	0.70	0.75	0.80
A1	0.00	0.02	0.05
A3		0.203 REF	
A3s	0.10	-	-
b	0.25	0.30	0.35
D	1.90	2.00	2.10
E	1.90	2.00	2.10
D2	0.80	0.90	1.00
E2	1.50	1.60	1.70
e	0.55	0.65	0.75
L	0.25	0.30	0.35
Ls		0.05 REF	
M		0.20 REF	

© 2023 DIOO MICROCIRCUITS CO., LTD.

10.2.DFN3*3-8

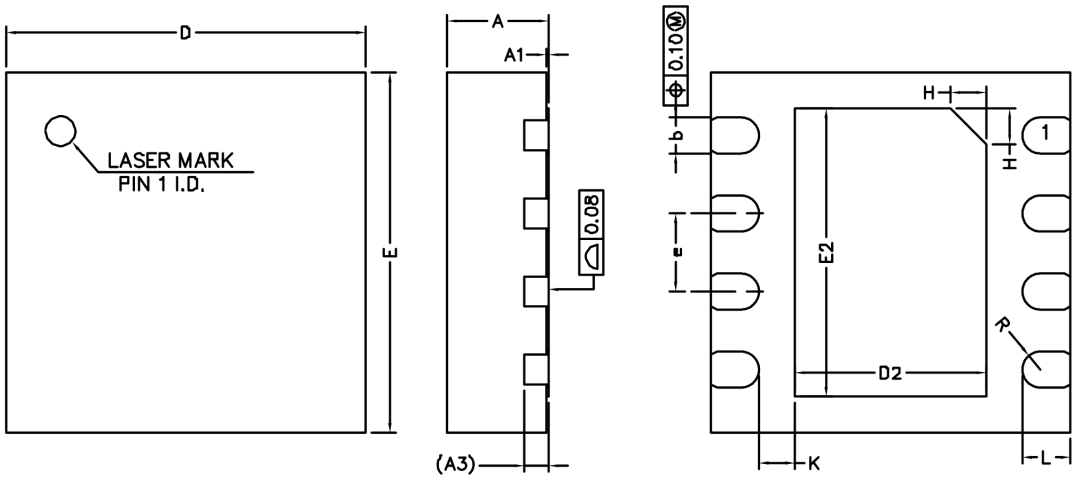

TOP VIEW SIDE VIEW BOTTOM VIEW



SIDE VIEW

Common Dimensions (Units of measure = Millimeter)			
Symbol	**Min**	**Nom**	**Max**
A	0.80	0.85	0.90
A1	0.00	0.02	0.05
A3		0.203 REF	
b	0.25	0.30	0.35
D	2.90	3.00	3.10
E	2.90	3.00	3.10
D2	1.50	1.60	1.70
E2	2.30	2.40	2.50
e	0.55	0.65	0.75
H		0.30 REF	
K	0.20	0.30	0.40
L	0.30	0.40	0.50
R		0.15 REF	

© 2023 DIOO MICROCIRCUITS CO., LTD.

10.3.SOT23-5

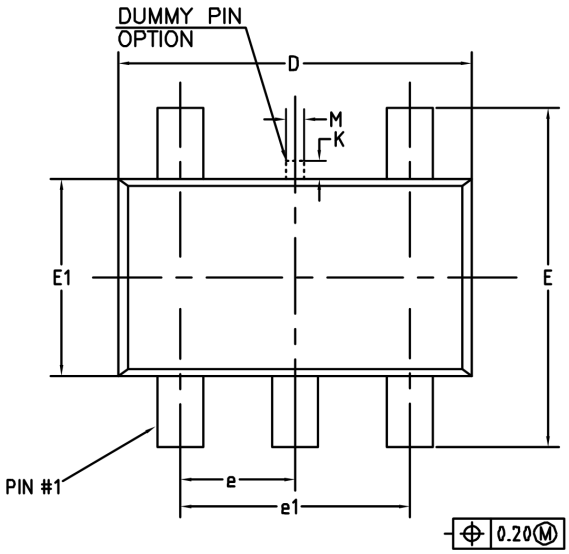

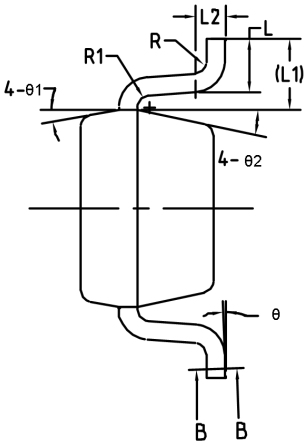

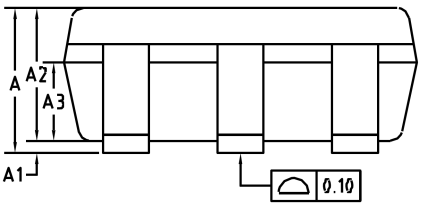

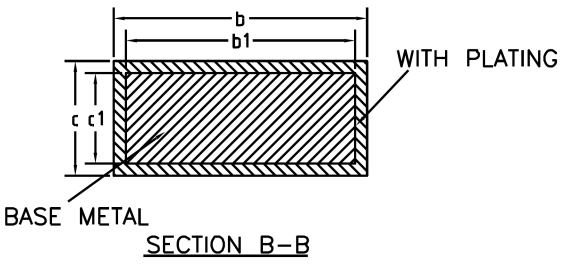

SECTION B–B

Common Dimensions (Units of measure = Millimeter)			
Symbol	**Min**	**Nom**	**Max**
A	-	-	1.25
A1	0	-	0.15
A2	1.00	1.10	1.20
A3	0.60	0.65	0.70
b	0.36	-	0.45
b1	0.35	0.38	0.41
c	0.14	-	0.20
c1	0.14	0.15	0.16
D	2.826	2.926	3.026
E	2.60	2.80	3.00
E1	1.526	1.626	1.726
e	0.90	0.95	1.00
e1	1.80	1.90	2.00
K	0	-	0.25
L	0.30	0.40	0.60
L1	0.59 REF		
L2	0.25 BSC		
M	0.10	0.15	0.25
R	0.05	-	0.20
R1	0.05	-	0.20
θ	0°	-	8°
θ1	8°	10°	12°
θ2	10°	12°	14°

© 2023 DIOO MICROCIRCUITS CO., LTD.

Disclaimer

This specification and information contained herein are provided on an “AS IS” basis and WITH ALL FAULTS. All product specifications, statements, information, and data (collectively, the “Information”) in this datasheet or made available on the website of www.dioo.com are subject to change without notice. The customer is responsible for checking and verifying the extent to which the Information contained in this publication is applicable to his/her application. All Information given herein is believed to be accurate and reliable, but it is presented without guarantee, warranty, or responsibility of any kind, express or implied.

 © 2023 DIOO MICROCIRCUITS CO., LTD.