DIO233X/B

Ultra Low Vos, Low Power Amplifier

Features

- Ultra low V_{OS}: DIO233X:15μV(Max)
  DIO233XB:35μV(Max)
- Low Power: 1.0μA(typ.)
- Unity Gain Stable
- Gain Bandwidth Product: 30kHz(typ.)
- Wide supply range: 1.8V to 5.5V
- Available in SOT23-5, SOT23-6, SOIC-8, MSOP-8, SOIC-14 and TSSOP-14 packages
- Temperature Range:-40°C to 125°C

Descriptions

DIO233X/B is a family of ultra low V_{OS} operational amplifier, with rail-to-rail CMOS input/output and single/dual channels selectable. DIO233X/B family has a gain-bandwidth product of 30kHz(typ.), wide operating supply voltage from 1.8V to 5.5V and broad output voltage swing.

DIO233X/B consumes ultra low power, with each channel 1.0μA(typ.) of bias current, which makes DIO233X/B be ideal for battery powered device, temperature-sense device, etc.

Typical Applications

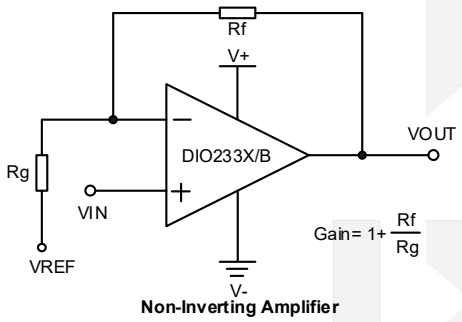

Non-Inverting Amplifier

Applications

- Toll Booth Tags
- Wearable Products
- Battery Current Monitoring
- Sensor Conditioning
- Battery Powered

© 2019 DIOO MICROCIRCUITS CO., LTD

Ordering Information

Order Part Number	Top Marking		T_A	Package	
DIO2331ST5	31YW	Green or RoHS	-40 to 125°C	SOT23-5	Tape & Reel, 3000
DIO2331BST5	31YW	Green or RoHS	-40 to 125°C	SOT23-5	Tape & Reel, 3000
DIO2331SO8	DIO2331	Green or RoHS	-40 to 125°C	SOIC-8	Tape & Reel, 2500
DIO2331BSO8	DIO2331	Green or RoHS	-40 to 125°C	SOIC-8	Tape & Reel, 2500
DIO2331MP8	DIO2331	Green or RoHS	-40 to 125°C	MSOP-8	Tape & Reel, 3000
DIO2331BMP8	DIO2331	Green or RoHS	-40 to 125°C	MSOP-8	Tape & Reel, 3000
DIO2331DST6	31DW	Green or RoHS	-40 to 125°C	SOT23-6	Tape & Reel, 3000
DIO2331DBST6	31DW	Green or RoHS	-40 to 125°C	SOT23-6	Tape & Reel, 3000
DIO2332SO8	DIO2332	Green or RoHS	-40 to 125°C	SOIC-8	Tape & Reel, 2500
DIO2332BSO8	DIO2332	Green or RoHS	-40 to 125°C	SOIC-8	Tape & Reel, 2500
DIO2332MP8	DIO2332	Green or RoHS	-40 to 125°C	MSOP-8	Tape & Reel, 3000
DIO2332BMP8	DIO2332	Green or RoHS	-40 to 125°C	MSOP-8	Tape & Reel, 3000
DIO2333SO8	DIO2333	Green or RoHS	-40 to 125°C	SOIC-8	Tape & Reel, 2500
DIO2333BSO8	DIO2333	Green or RoHS	-40 to 125°C	SOIC-8	Tape & Reel, 2500
DIO2333MP8	DIO2333	Green or RoHS	-40 to 125°C	MSOP-8	Tape & Reel, 3000
DIO2333BMP8	DIO2333	Green or RoHS	-40 to 125°C	MSOP-8	Tape & Reel, 3000
DIO2334SO14	DIO2334	Green or RoHS	-40 to 125°C	SOIC-14	Tape & Reel, 2500
DIO2334BSO14	DIO2334	Green or RoHS	-40 to 125°C	SOIC-14	Tape & Reel, 2500
DIO2334TP14	DIO2334	Green or RoHS	-40 to 125°C	TSSOP-14	Tape & Reel, 2500
DIO2334BTP14	DIO2334	Green or RoHS	-40 to 125°C	TSSOP-14	Tape & Reel, 2500

Ordering Information Complimentary Note

Ordering Code = Part No. + Package Code

Part No.:
- DIO2331/1B/1D/1DB
- DIO2332/2B
- DIO2333/3B
- DIO2334/4B

Package Code:
- ST5: stands for SOT23-5
- ST6: stands for SOT23-6
- SO8: stands for SOIC-8
- MP8: stands for MSOP-8
- SO14: stands for SOIC-14
- TP14: stands for TSSOP-14

© 2019 DIOO MICROCIRCUITS CO., LTD

Pin Assignments

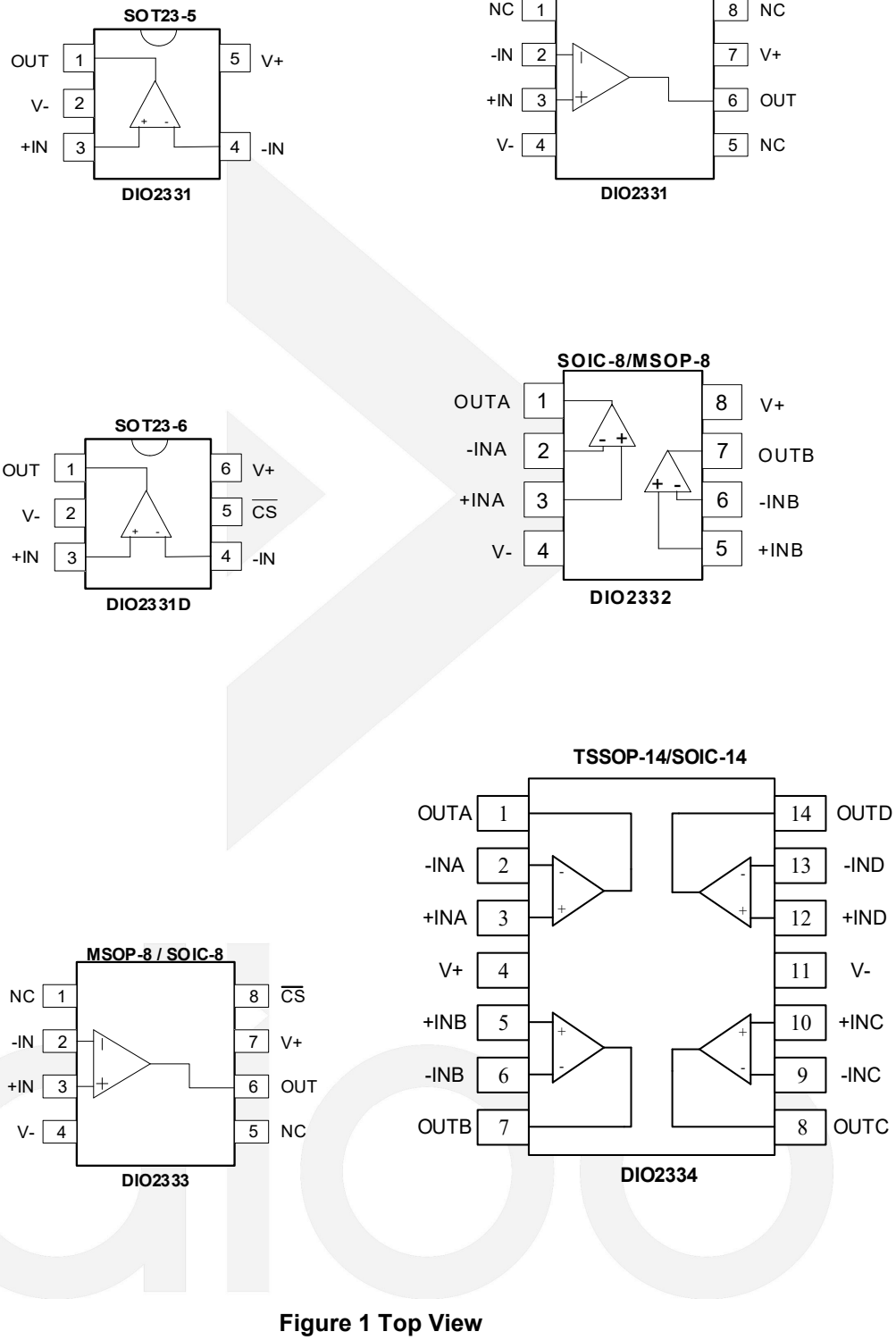

Figure 1 Top View

© 2019 DIOO MICROCIRCUITS CO., LTD

Pin Description

Pin name	Description
V+	Positive supply
V-	Negative supply
+INX	Positive Input
-INX	Negative Input
OUTX	Output
NC	No connect
$\overline{CS}$	Power saving Chip Select

Absolute Maximum Ratings

Stresses beyond those listed under “Absolute Maximum Rating” may cause permanent damage to the device. These are stress ratings only and functional operation of the device at these or any other condition beyond those indicated in the operational sections of the specifications is not implied. Exposure to absolute maximum rating conditions for extended periods may affect device reliability.

Parameter		Rating	Unit
V+ – V-		7	V
Current at Input Pins		±2	mA
Input Voltage		(V-)-0.3V to (V+)+0.3V	V
Difference Input Voltage		|V+ – V-|	
Output Short-Circuit Current		Continuous	
Current at Output and Supply Pins		±30	mA
Storage Temperature		-65 to 150	°C
Maximum Junction Temperature(T_J)		150	°C
ESD protection on all pins (HBM)		7.5	kV
Package Thermal Resistance(θ_{JA})	SOT23-5	256	°C/W
	SOIC-8	163	°C/W
	MSOP-8	206	°C/W
	SOIC-14	120	°C/W
	TSSOP-14	100	°C/W
Operating Temperature Range(T_A)		-40~125	°C

© 2019 DIOO MICROCIRCUITS CO., LTD

DC Electrical Characteristics

Unless otherwise indicated, V+=1.8V to 5.5V, V-=0, T_A=25°C, V_{CM}=V+/2, R_L=1MΩ to V_{CM}.

Symbol	Parameter	Conditions		Min.	Typ.	Max.	Unit
Input Offset							
V_{OS}	Input Offset Voltage	V+=1.8~5.5V,V_{CM}=(V+)/2	DIO233X	-15		15	μV
			DIO233XB	-35		35	
$\triangle V_{OS}/\triangle T_A$	Input Offset Drift with Temperature	T_A=-40°C to 125°C,V+=1.8~5.5V, V_{CM} =(V+)/2			±0.15		μV/°C
PSRR	Power Supply Rejection Ratio	V_{CM} =(V+)/2		100	110		dB
Input Bias Current and Impedance							
I_B	Input Bias Current	T_A=25°C			±1.0		pA
		T_A=85°C			60		pA
		T_A=125°C			2000		pA
I_{OS}	Input Offset Current				±1.0		pA
Z_{CM}	Common Mode Input Impedance				10^{13}||6		Ω||pF
Z_{DIFF}	Differential Input Impedance				10^{13}||6		Ω||pF
Common Mode							
V_{CMR}	Common Mode Input Voltage Range			(V-)-0.1		(V+)+0.1	V
CMRR	Common Mode Rejection Ratio	V_{CM} from (V-)-0.1 to (V+)+0.1		100	110		dB
Open-Loop Gain							
A_{OL}	DC Open-Loop Gain (Large Signal)	0.2V< V_{OUT} < (V+ – 0.2V), R_L= 50kΩ to V_L			120		dB
Output							
V_{OL}	Output Voltage Low	V+=5V,R_L=50k to V+/2			4.8		mV
V_{OH}	Output Voltage High	V+=5V,R_L=50k to GND			4.994		V
I_{SC}	Output Short-Circuit Current	V+=1.8V			3		mA
		V+=5V			30		
Power Supply							
THD		V+=5V, V_{PP}=2V, R_L=50k, Frequency=100Hz			0.13		%

© 2019 DIOO MICROCIRCUITS CO., LTD

		V+=5V, V_{PP}=2V, R_L=50k, Frequency=200Hz		0.26		
		V+=5V, V_{PP}=2V, R_L=50k, Frequency=250Hz		0.33		
		V+=5V, V_{PP}=2V, R_L=50k, Frequency=500Hz		0.62		
V+	Supply Voltage		1.8		5.5	V
I_Q	Quiescent Current per Amplifier	I_O=0, V_{CM} =(V+)/2, V+=5.0V		1.0		μA

Specifications subject to change without notice.

AC Electrical Characteristics

Unless otherwise indicated, T_A=25°C, V+=1.8 to 5.5V, V-=0, V_{CM}=V+/2, C_L=60pF, R_L=1MΩ to V_{CM}.

Symbol	Parameter	Conditions	Min.	Typ.	Max.	Unit
AC Response						
GBWP	Gain Bandwidth Product			30		kHz
PM	Phase Margin	G=1V/V		65		°
SR	Slew Rate			10		V/ms
Noise						
Eni	Input Noise Voltage	f=0.1Hz to10Hz		3.9		μVp-p
e_{ni}	Input Noise Voltage Density	f=1kHz		165		nV/√Hz
i_{ni}	Input Noise Current Density	f=1kHz		0.6		fA/√Hz

Specifications subject to change without notice.

Typical Performance Characteristics

Icc VS Vcc

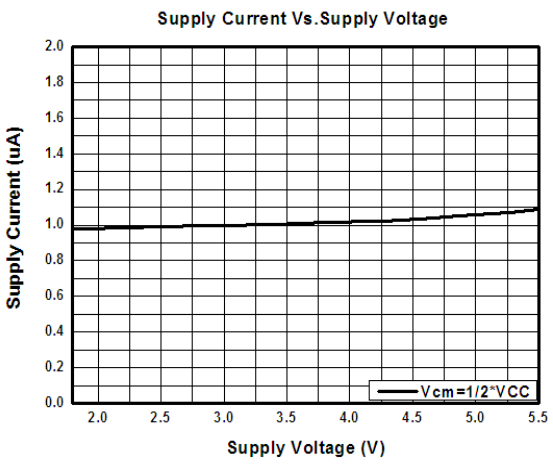

Icc VS TEMP

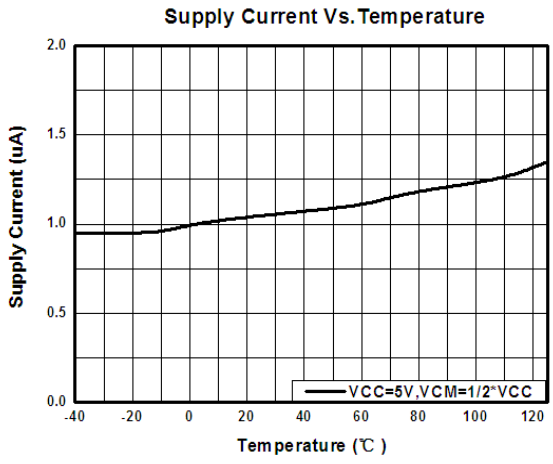

© 2019 DIOO MICROCIRCUITS CO., LTD

V_{OS} VS V_{CC}

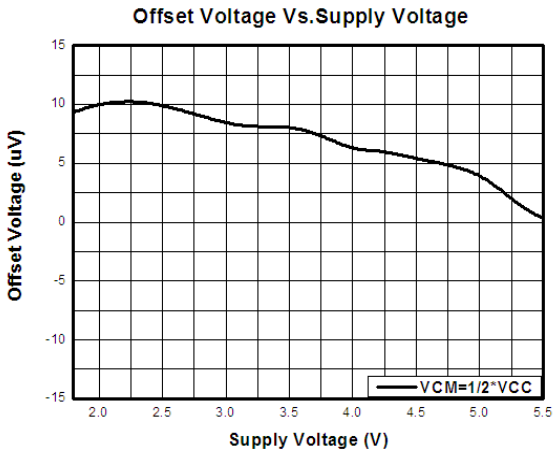

V_{OS} VS V_{CM}

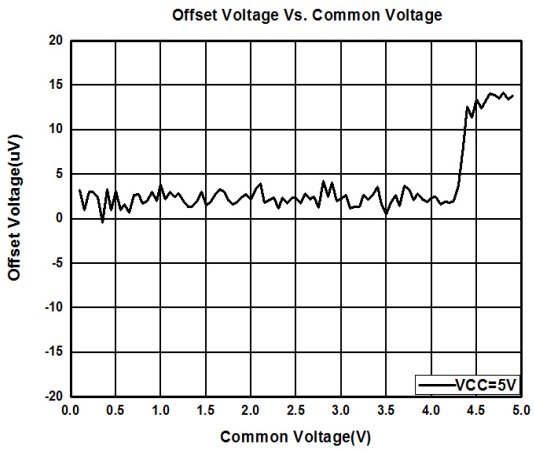

V_{OS} VS TEMP

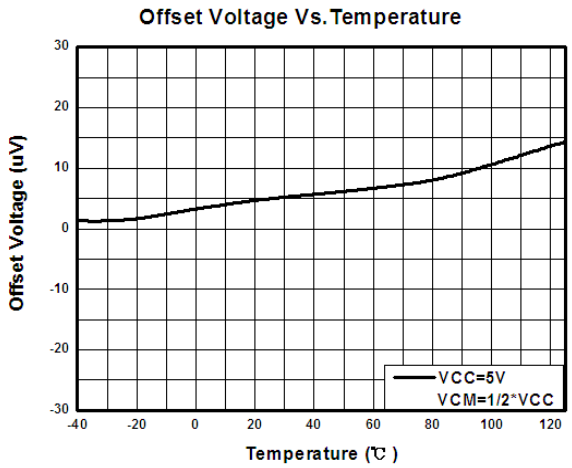

Large-Signal Response

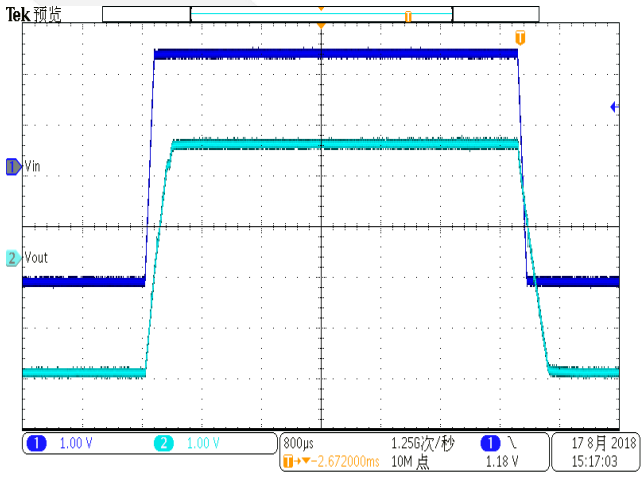

Small-signal response (CL=No Cap)

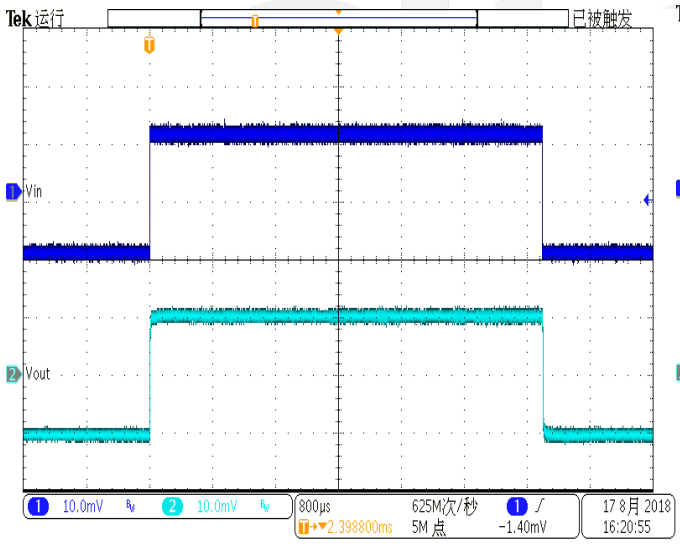

Small-signal response (CL=200p Cap)

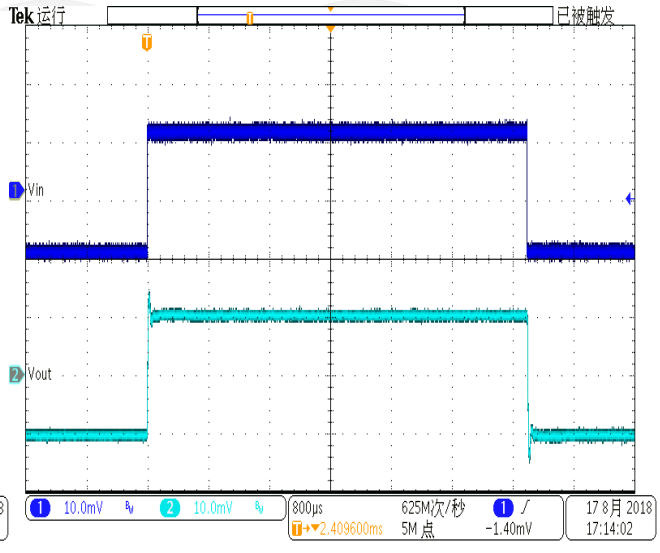

© 2019 DIOO MICROCIRCUITS CO., LTD

Physical Dimensions: SOT23-5

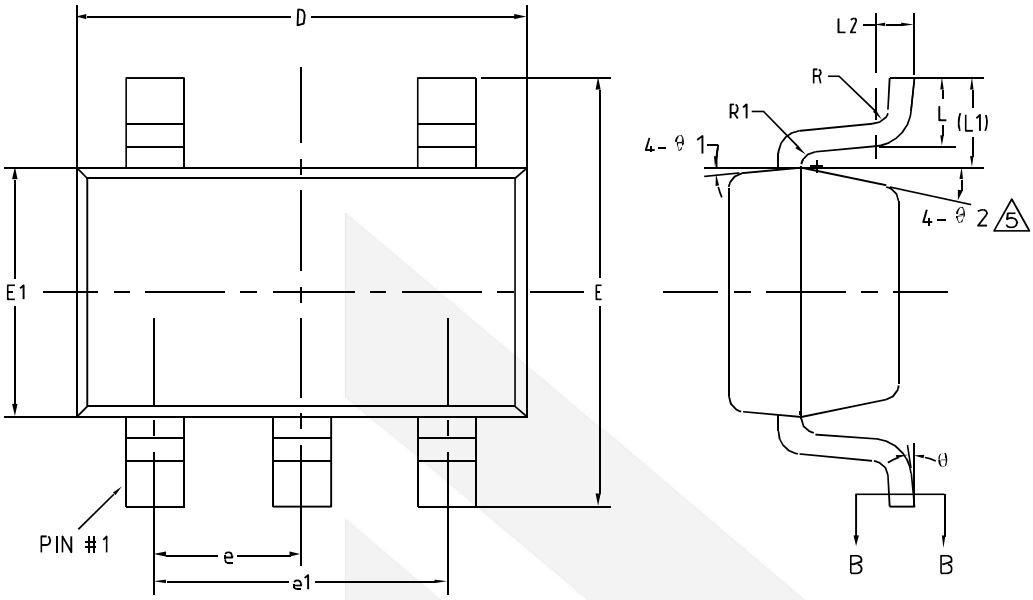

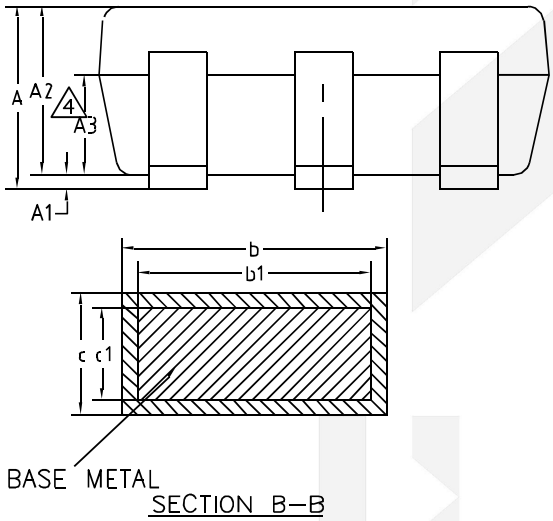

COMMON DIMENSIONS (UNITS OF MEASURE=MILLIMETER)			
Symbol	**MIN**	**NOM**	**MAX**
A	-	-	1.25
A1	0	-	0.15
A2	1.00	1.10	1.20
A3	0.60	0.65	0.70
b	0.36	-	0.50
b1	0.36	0.38	0.45
c	0.14	-	0.20
c1	0.14	0.15	0.16
D	2.826	2.926	3.026
E	2.60	2.80	3.00
E1	1.526	1.626	1.726
e	0.90	0.95	1.00
e1	1.80	1.90	2.00
L	0.35	0.45	0.60
L1	0.59REF		
L2	0.25BSC		
R	0.10	-	-
R1	0.10	-	0.25
Θ	0°	-	8°
Θ1	3°	5°	7°
Θ2	6°	-	14°

© 2019 DIOO MICROCIRCUITS CO., LTD

Physical Dimensions: SOT23-6

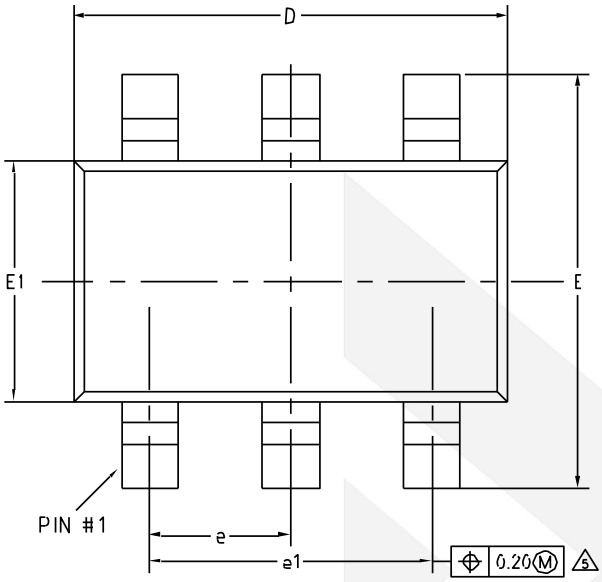

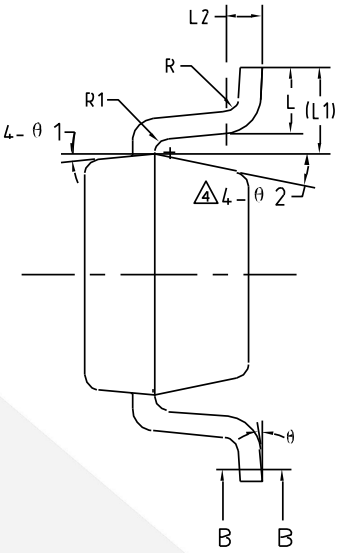

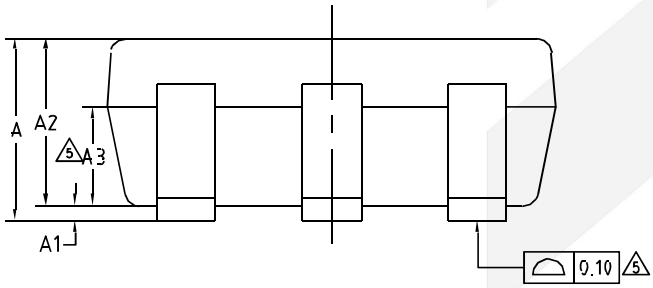

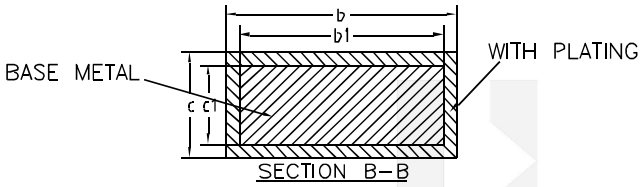

COMMON DIMENSIONS (UNITS OF MEASURE=MILLIMETER)			
Symbol	**MIN**	**NOM**	**MAX**
A	-	-	1.25
A1	0	-	0.15
A2	1.00	1.10	1.20
A3	0.60	0.65	0.70
b	0.36	-	0.50
b1	0.36	0.38	0.45
c	0.14	-	0.20
c1	0.14	0.15	0.16
D	2.826	2.926	3.026
E	2.60	2.80	3.00
E1	1.526	1.626	1.726
e	0.90	0.95	1.00
e1	1.80	1.90	2.00
L	0.35	0.45	0.60
L1	0.59REF		
L2	0.25BSC		
R	0.10	-	-
R1	0.10	-	0.20
Θ	0°	-	8°
Θ1	3°	5°	7°
Θ2	6°	-	14°

© 2019 DIOO MICROCIRCUITS CO., LTD

Physical Dimensions: SOIC-8

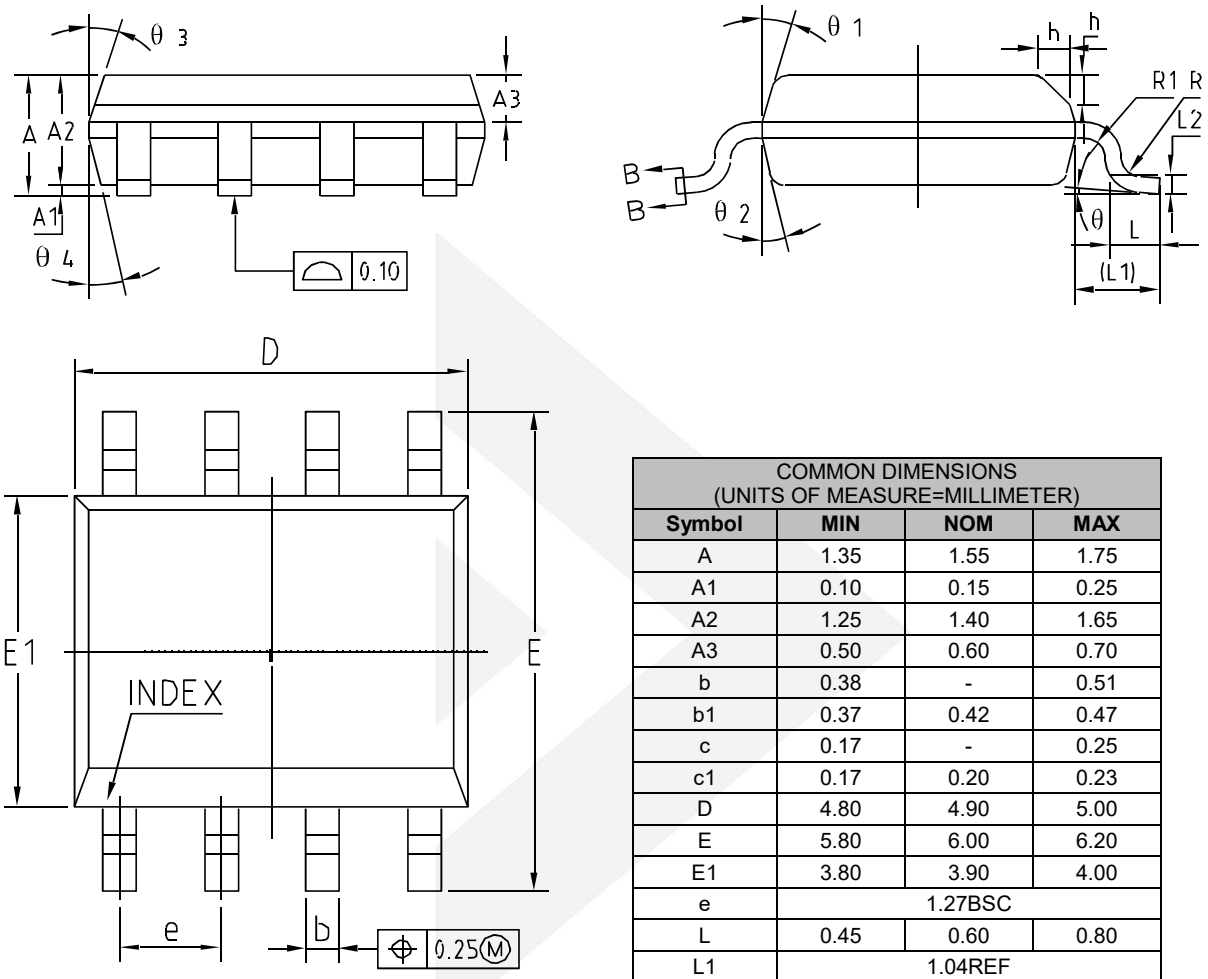

COMMON DIMENSIONS (UNITS OF MEASURE=MILLIMETER)			
Symbol	**MIN**	**NOM**	**MAX**
A	1.35	1.55	1.75
A1	0.10	0.15	0.25
A2	1.25	1.40	1.65
A3	0.50	0.60	0.70
b	0.38	-	0.51
b1	0.37	0.42	0.47
c	0.17	-	0.25
c1	0.17	0.20	0.23
D	4.80	4.90	5.00
E	5.80	6.00	6.20
E1	3.80	3.90	4.00
e	1.27BSC		
L	0.45	0.60	0.80
L1	1.04REF		
L2	0.25BSC		
R	0.07	-	-
R1	0.07	-	-
h	0.30	0.40	0.50
Θ	0°	-	8°
Θ1	15°	17°	19°
Θ2	11°	13°	15°
Θ3	15°	17°	19°
Θ4	11°	13°	15°

© 2019 DIOO MICROCIRCUITS CO., LTD

Physical Dimensions: MSOP-8

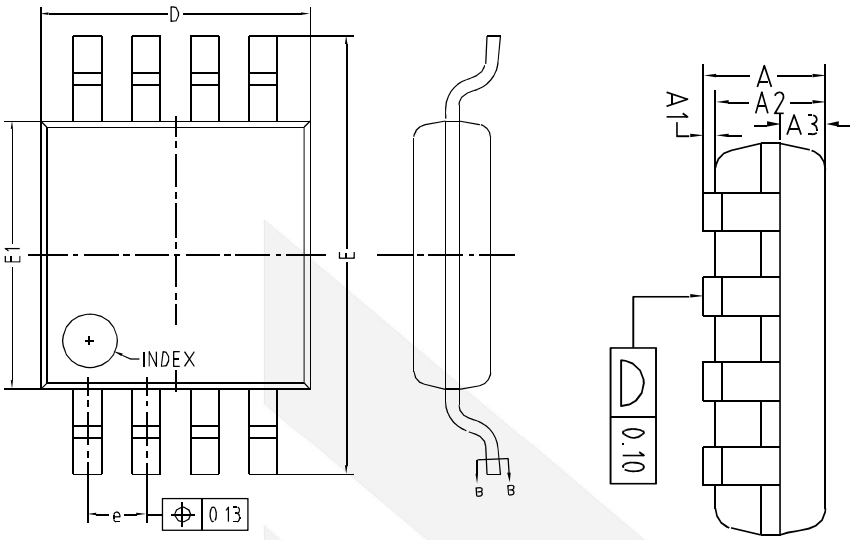

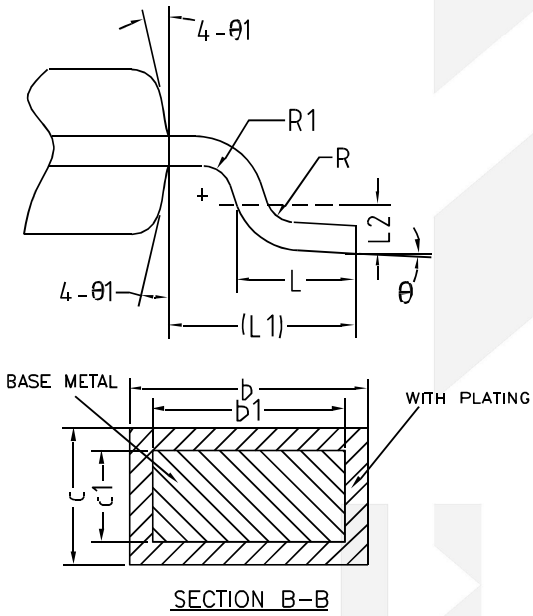

COMMON DIMENSIONS (UNITS OF MEASURE=MILLIMETER)			
Symbol	**MIN**	**NOM**	**MAX**
A	-	-	1.10
A1	0	-	0.15
A2	0.75	0.85	0.95
A3	0.25	0.35	0.39
b	0.28	-	0.37
b1	0.27	0.30	0.33
c	0.15	-	0.20
c1	0.14	0.15	0.16
D	2.90	3.00	3.10
E	4.70	4.90	5.10
E1	2.90	3.00	3.10
e	0.55	0.65	0.75
L	0.40	0.60	0.80
L1	0.95REF		
L2	0.25BSC		
R	0.07	-	-
R1	0.07	-	-
Θ	0°	-	8°
Θ1	9°	12°	15°

© 2019 DIOO MICROCIRCUITS CO., LTD

Physical Dimensions: SOIC-14

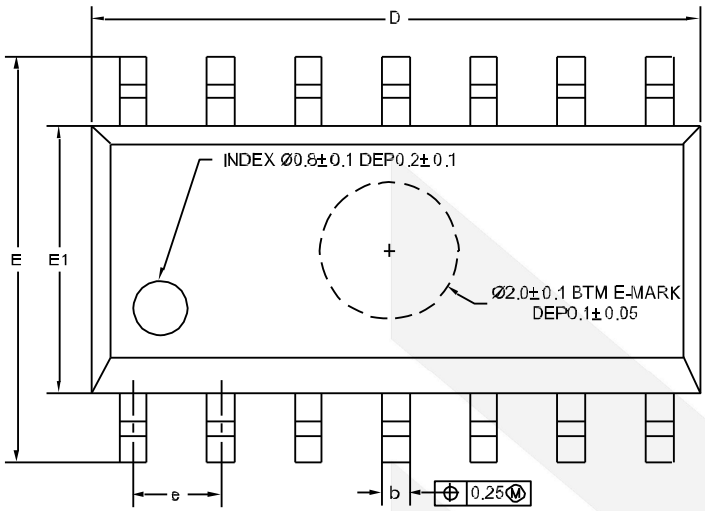

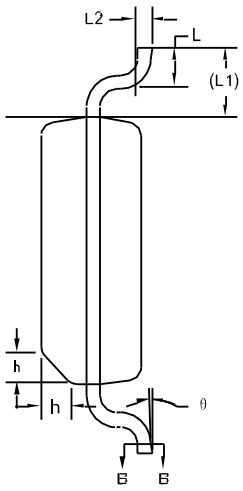

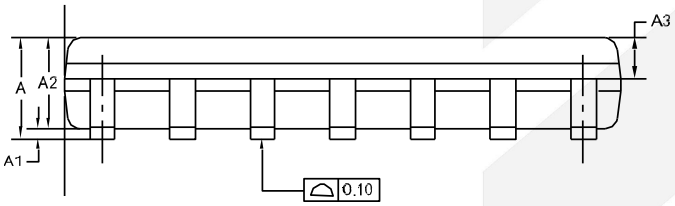

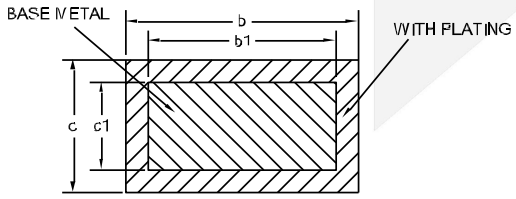

SECTION B-B

COMMON DIMENSIONS (UNITS OF MEASURE=MILLIMETER)			
Symbol	**MIN**	**NOM**	**MAX**
A	1.35	1.60	1.75
A1	0.10	0.15	0.25
A2	1.25	1.45	1.65
A3	0.55	0.65	0.75
b	0.36	-	0.49
b1	0.35	0.40	0.45
c	0.17	-	0.25
c1	0.17	0.20	0.23
D	8.53	8.63	8.73
E	5.80	6.00	6.20
E1	3.80	3.90	4.00
e	1.27BSC		
L	0.45	0.60	0.80
L1	1.04REF		
L2	0.25BSC		
R	0.07	-	-
R1	0.07	-	-
h	0.30	0.40	0.50
Θ	0°	-	8°
Θ1	6°	8°	10°

© 2019 DIOO MICROCIRCUITS CO., LTD

Physical Dimensions: TSSOP-14

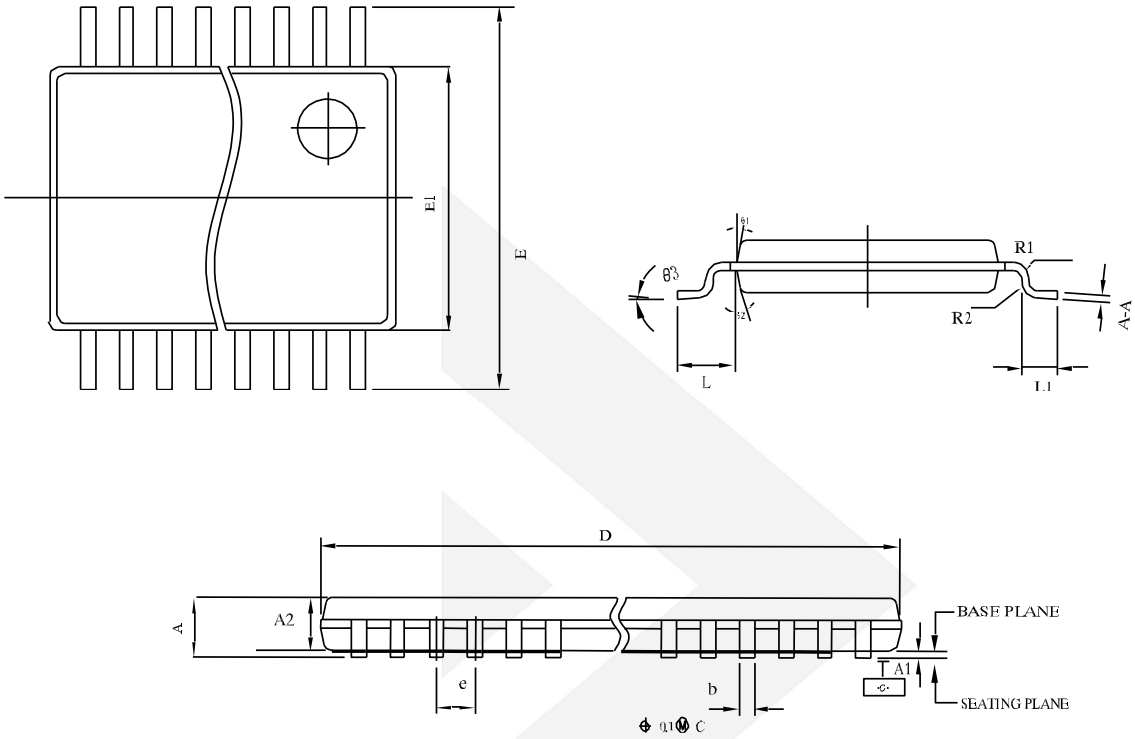

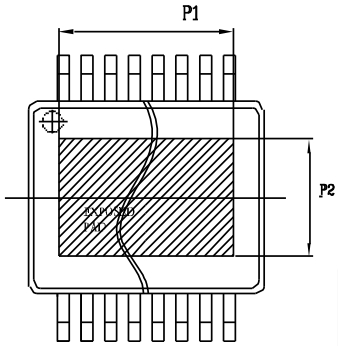

COMMON DIMENSIONS (UNITS OF MEASURE=MILLIMETER)			
Symbol	**MIN**	**NOM**	**MAX**
A	-	-	1.2
A1	0.05	-	0.15
A2	0.8	-	1.05
E	6.25	-	6.55
E1	4.3	-	4.5
D	4.9	-	5.1
L	-	-	1.0
L1	0.45	-	0.75
e	0.65		
b	0.19	-	0.30
R1	0.15TYP		
R2	0.15TYP		
A-A	0.09	-	0.20
Θ1	12°TYP		
Θ2	12°TYP		
Θ3	0°	-	8°

© 2019 DIOO MICROCIRCUITS CO., LTD

CONTACT US

Dioo is a professional design and sales corporation for high-quality and performance analog semiconductors. The company focuses on industry markets, such as, cell phone, handheld products, laptop, and medical equipment and so on. Dioo's product families include analog signal processing and amplifying, LED drivers and charger IC. Go to http://www.dioo.com for a complete list of Dioo product families.

For additional product information, or full datasheet, please contact with our Sales Department or Representatives.

© 2019 DIOO MICROCIRCUITS CO., LTD