DIO236X

Ultra Low Vos, Low Power Amplifier

Features

- Ultra low V_{OS}: DIO2361A/2A: 10μV(Max)
  DIO2361B/2B: 20μV(Max)
  DIO2361/2: 40μV(Max)
  DIO2361M/2M: 65μV(Max)
- Low Power: 17.0μA(typ.)
- Unity Gain Stable
- Gain Bandwidth Product: 300kHz(typ.)
- Wide supply range: 2.5V to 5.5V
- Available in SOT23-5, SC70-5, SOIC-8, MSOP-8, DFN2*2-8 and DFN3*3-8 packages
- Temperature Range:
  -Industrial: -40°C to 85°C
  -Extended: -40°C to 125°C

Descriptions

DIO236x is a family of ultra low V_{OS} operational amplifier, with rail-to-rail CMOS input/output and single/dual channels selectable. DIO236x family has a gain-bandwidth product of 300kHz(typ.), wide operating supply voltage from 2.5V to 5.5V and broad output voltage swing.

DIO236x consumes ultra low power, with each channel 17.0μA(typ.) of bias current, which makes DIO236x be ideal for battery powered device, temperature-sense device, etc.

Typical Applications

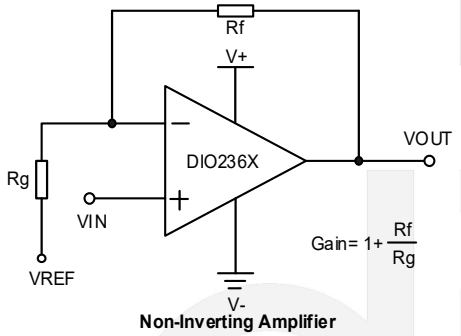

Non-Inverting Amplifier

Applications

- Active Filters
- Data Acquisition
- Portable Equipment
- Test Equipment
- Broadband Communication
- Process Control
- Audio and Video Processing

© 2021 DIOO MICROCIRCUITS CO., LTD

Ordering Information

Order Part Number	Top Marking		T_A	Package	
DIO2361ASC5	W361	Green or RoHS	-40 to 125°C	SC70-5	Tape & Reel, 3000
DIO2361AST5	W361	Green or RoHS	-40 to 125°C	SOT23-5	Tape & Reel, 3000
DIO2361ASO8	DIO2361	Green or RoHS	-40 to 125°C	SOIC-8	Tape & Reel, 2500
DIO2361AMP8	DIO2361	Green or RoHS	-40 to 125°C	MSOP-8	Tape & Reel, 3000
DIO2361BSC5	W361	Green or RoHS	-40 to 125°C	SC70-5	Tape & Reel, 3000
DIO2361BST5	W361	Green or RoHS	-40 to 125°C	SOT23-5	Tape & Reel, 3000
DIO2361BSO8	DIO2361	Green or RoHS	-40 to 125°C	SOIC-8	Tape & Reel, 2500
DIO2361BMP8	DIO2361	Green or RoHS	-40 to 125°C	MSOP-8	Tape & Reel, 3000
DIO2361SC5	W361	Green or RoHS	-40 to 125°C	SC70-5	Tape & Reel, 3000
DIO2361ST5	W361	Green or RoHS	-40 to 125°C	SOT23-5	Tape & Reel, 3000
DIO2361SO8	DIO2361	Green or RoHS	-40 to 125°C	SOIC-8	Tape & Reel, 2500
DIO2361MP8	DIO2361	Green or RoHS	-40 to 125°C	MSOP-8	Tape & Reel, 3000
DIO2361MSC5	W361	Green or RoHS	-40 to 125°C	SC70-5	Tape & Reel, 3000
DIO2361MST5	W361	Green or RoHS	-40 to 125°C	SOT23-5	Tape & Reel, 3000
DIO2361MSO8	DIO2361	Green or RoHS	-40 to 125°C	SOIC-8	Tape & Reel, 2500
DIO2361MMP8	DIO2361	Green or RoHS	-40 to 125°C	MSOP-8	Tape & Reel, 3000
DIO2362ACN8	2362	Green or RoHS	-40 to 125°C	DFN2*2-8	Tape & Reel, 3000
DIO2362ACD8	D2362	Green or RoHS	-40 to 125°C	DFN3*3-8	Tape & Reel, 5000
DIO2362ASO8	DIO2362	Green or RoHS	-40 to 125°C	SOIC-8	Tape & Reel, 2500
DIO2362AMP8	DIO2362	Green or RoHS	-40 to 125°C	MSOP-8	Tape & Reel, 3000
DIO2362BCN8	2362	Green or RoHS	-40 to 125°C	DFN2*2-8	Tape & Reel, 3000
DIO2362BCD8	D2362	Green or RoHS	-40 to 125°C	DFN3*3-8	Tape & Reel, 5000
DIO2362BSO8	DIO2362	Green or RoHS	-40 to 125°C	SOIC-8	Tape & Reel, 2500
DIO2362BMP8	DIO2362	Green or RoHS	-40 to 125°C	MSOP-8	Tape & Reel, 3000
DIO2362CN8	2362	Green or RoHS	-40 to 125°C	DFN2*2-8	Tape & Reel, 3000
DIO2362CD8	D2362	Green or RoHS	-40 to 125°C	DFN3*3-8	Tape & Reel, 5000
DIO2362SO8	DIO2362	Green or RoHS	-40 to 125°C	SOIC-8	Tape & Reel, 2500
DIO2362MP8	DIO2362	Green or RoHS	-40 to 125°C	MSOP-8	Tape & Reel, 3000
DIO2362MCN8	2362	Green or RoHS	-40 to 125°C	DFN2*2-8	Tape & Reel, 3000
DIO2362MCD8	D2362	Green or RoHS	-40 to 125°C	DFN3*3-8	Tape & Reel, 5000
DIO2362MSO8	DIO2362	Green or RoHS	-40 to 125°C	SOIC-8	Tape & Reel, 2500
DIO2362MMP8	DIO2362	Green or RoHS	-40 to 125°C	MSOP-8	Tape & Reel, 3000

Ordering Information Complimentary Note

Ordering Code = Part No. + Package Code

Part No.:
- DIO2361A/2A
- DIO2361B/2B
- DIO2361/2
- DIO2361M/2M

Package Code:
- SC5: stands for SC70-5
- ST5: stands for SOT23-5
- SO8: stands for SOIC-8
- MP8: stands for MSOP-8
- CN8: stands for DFN2*2-8
- CD8: stands for DFN3*3-8

© 2021 DIOO MICROCIRCUITS CO., LTD

Pin Assignments

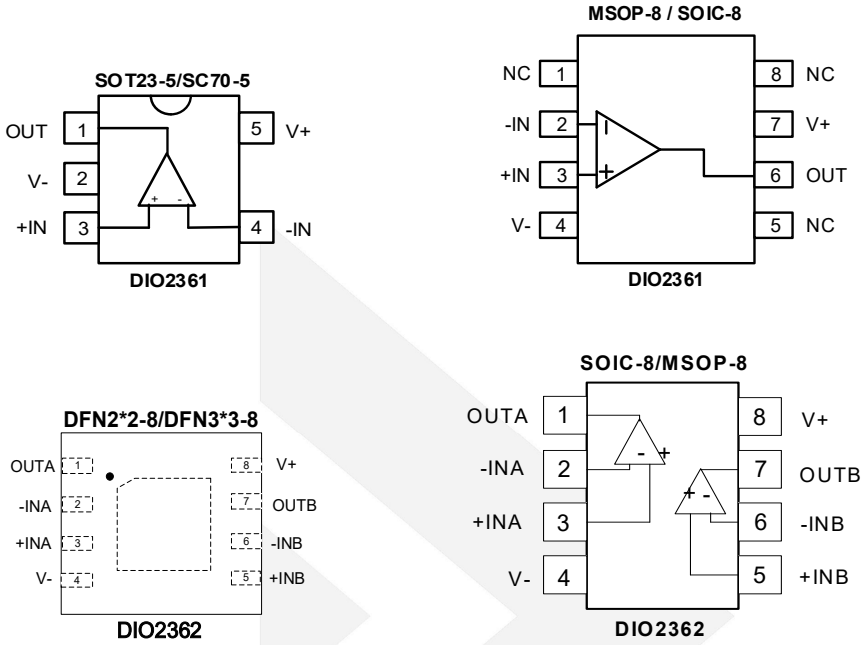

Figure 1 Top View

Pin Description

Pin name	Description
V+	Positive supply
V-	Negative supply
+INX	Positive Input
-INX	Negative Input
OUTX	Output
NC	No connect

© 2021 DIOO MICROCIRCUITS CO., LTD

Absolute Maximum Ratings

Stresses beyond those listed under “Absolute Maximum Rating” may cause permanent damage to the device. These are stress ratings only and functional operation of the device at these or any other condition beyond those indicated in the operational sections of the specifications is not implied. Exposure to absolute maximum rating conditions for extended periods may affect device reliability.

Parameter		Rating	Unit
Supply Voltage (V+ – V-)		7	V
Input Voltage		(V-)-0.3V to (V+) 0.3V	V
Difference Input Voltage		|V+ – V-|	V
Storage Temperature Range		-65 to 150	°C
Junction Temperature		150	°C
Lead Temperature Range		260	°C
ESD	HBM, JEDEC: JESD22-A114	8	kV

Recommended Operating Conditions

The Recommended Operating Conditions table defines the conditions for actual device operation to ensure optimal performance to the datasheet specifications. DIOO does not recommend exceeding them or designing to Absolute Maximum Ratings.

Parameter	Rating	Unit
Supply Voltage	2.5 to 5.5	V
Input Voltage	0 to 5	V
Operating Temperature Range	-40 to 125	°C

© 2021 DIOO MICROCIRCUITS CO., LTD

Electrical Characteristics

Typical value: V_{CC}=5V, R_L=1MΩ to V_{CC}/2, V_{CM}=1/2V_{CC}, T_A = 25°C, unless otherwise specified.

Symbol	Parameter	Conditions		Min.	Typ.	Max.	Unit
INPUT CHARACTERISTICS							
V_{OS}	Input Offset Voltage	V+=3.3V to 5.5V	DIO2361A/2A	-10		10	μV
			DIO2361B/2B	-20		20	
			DIO2361/2	-40		40	
			DIO2361M/2M	-65		65	
I_B	Input Bias Current	V+=3.3V to 5.5V			1		pA
I_{OS}	Input Offset Current	V+=3.3V to 5.5V			1		pA
V_{CM}	Common Mode Voltage Range			-0.1		(V+) +0.1	V
CMRR	Common Mode Rejection Ratio	-40°C≤T_A≤125°C			130		dB
A_{OL}	Open Loop Voltage Gain	R_L=50kΩ, V_O= 0.1 to (V+)-0.1		80	110		dB
$\Delta V_{OS}/\Delta T$	Input Offset Voltage Drift	-40°C≤T_A≤125°C			0.05		μV/°C
OUTPUT CHARACTERISTICS							
V_{OH}	Output Voltage High	R_L=50kΩ, -40°C≤T_A≤125°C			4.992		V
V_{OL}	Output Voltage Low	R_L=50kΩ, -40°C≤T_A≤125°C			8		mV
I_{SC}	Output Short Circuit Current	Source I_{SC}, V+=5V			34		mA
		Sink I_{SC}, V+=5V			34		
POWER SUPPLY							
PSRR	Power Supply Rejection Ration			100			dB
I_S	Supply Current per Channel/Amp	-40°C≤T_A≤125°C			17	27	μA
DYNAMIC PERFORMANCE							
GBP	Gain Bandwidth Product	C_L=100pF, R_L=1MΩ			300		kHz
SR	Slew Rate	G=1, 2V Output Step			160		V/ms
t_S	Setting Time	G=1, 2V Output Step			1		ms
Θm	Phase Margin				62		Deg
tr	Overload Recovery Time				40		μs
NOISE PERFORMANCE							
THD	Total Harmonic Distortion	f=1kHz, 4V_{PP}, R_L=5kΩ,			0.33		%
e_n	Voltage Noise Density	f=1kHz			70		nV/√Hz

Specifications subject to change without notice.

© 2021 DIOO MICROCIRCUITS CO., LTD

Typical Performance Characteristics

I_S vs. V_{CC}

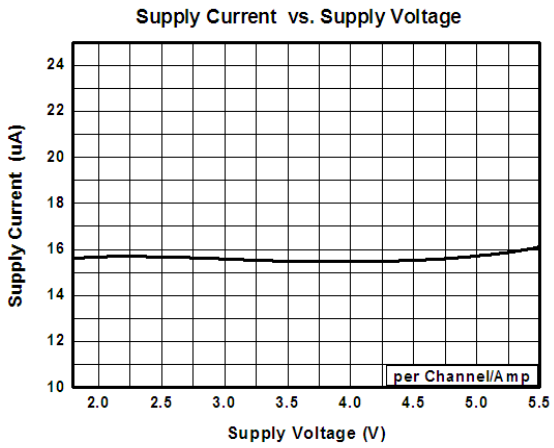

I_S vs. Temperature

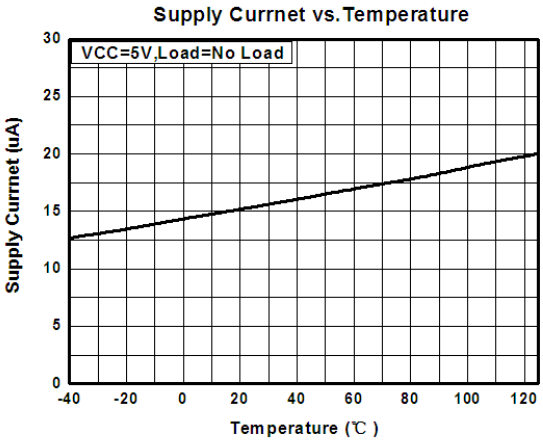

V_{OS} vs. V_{CC}

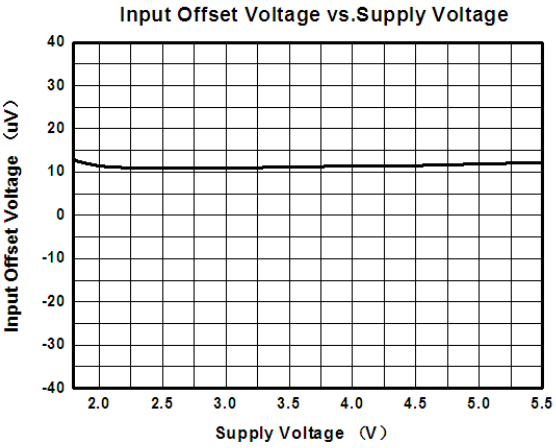

V_{OS} vs. Temperature

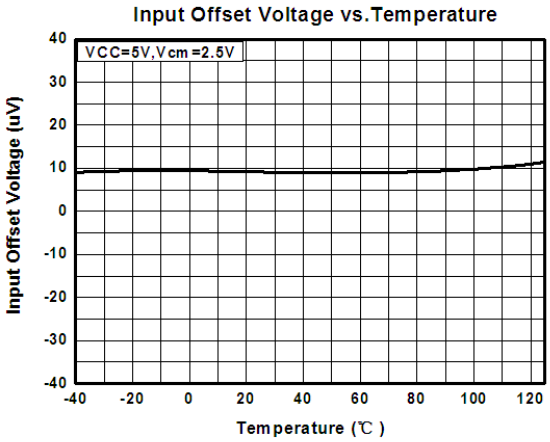

© 2021 DIOO MICROCIRCUITS CO., LTD

Typical Performance Characteristics (Continue)

Small-signal Response
(V_{CC}=5V, C_L=200pF)

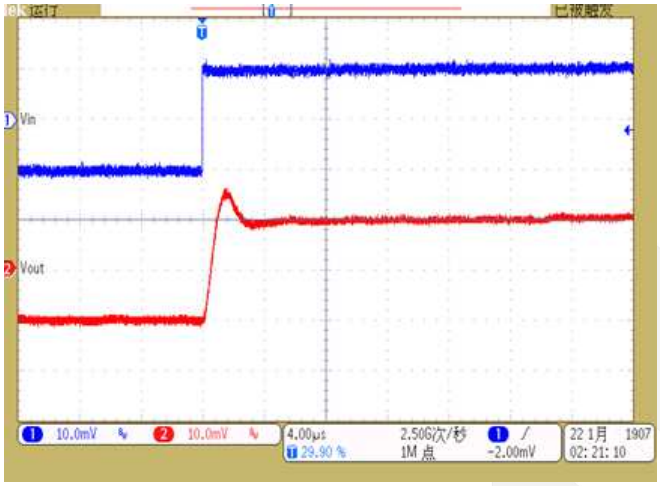

Small-signal Response
(V_{CC}=5V, C_L=200pF)

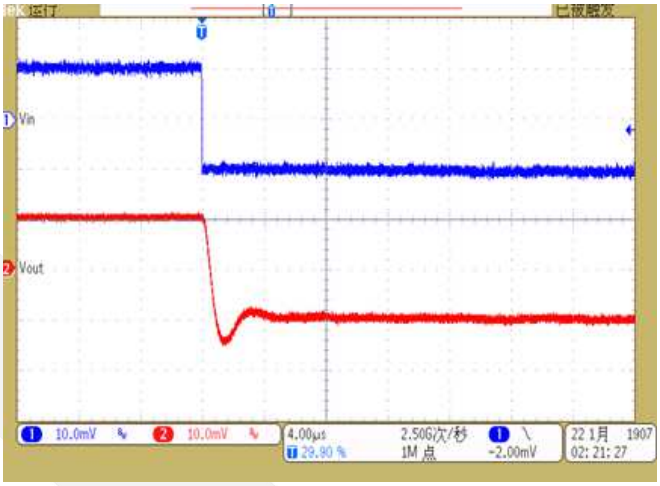

Large-signal Response
(V_{CC}=5V, R_L=5.1kΩ)

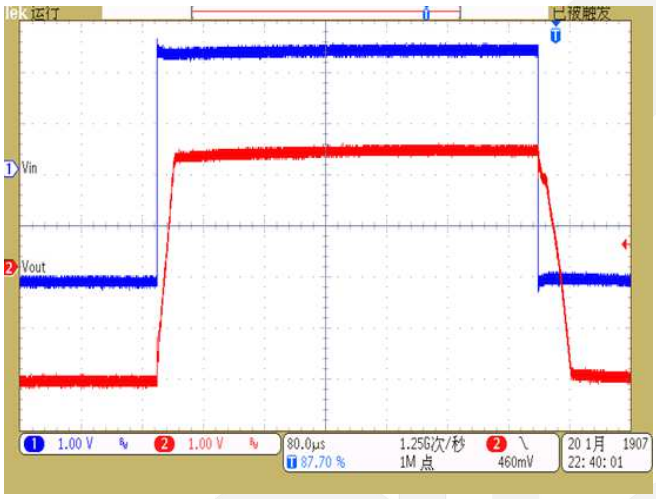

© 2021 DIOO MICROCIRCUITS CO., LTD

Physical Dimensions: SC70-5

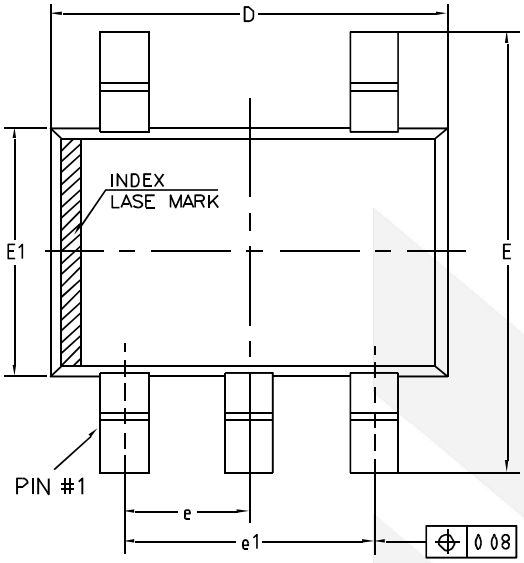

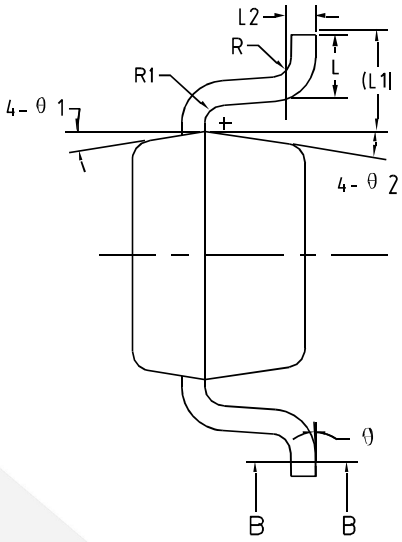

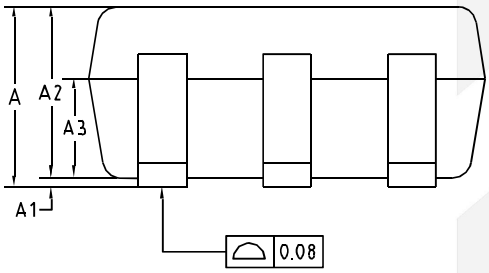

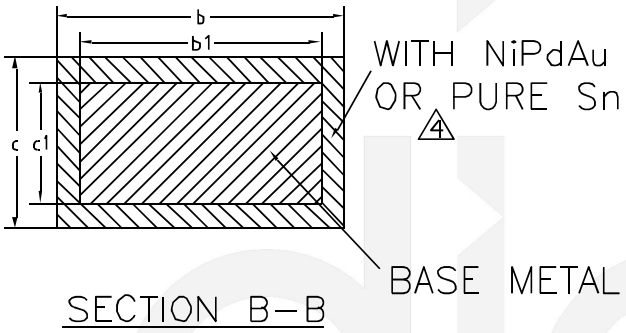

SECTION B–B

COMMON DIMENSIONS (UNITS OF MEASURE=MILLIMETER)			
Symbol	**MIN**	**NOM**	**MAX**
A	0.85	-	1.05
A1	0	-	0.10
A2	0.80	0.90	1.00
A3	0.47	0.52	0.57
b	0.23	-	0.33
b1	0.22	0.25	0.28
c	0.12	-	0.18
c1	0.115	0.13	0.14
D	2.02	2.07	2.12
E	2.20	2.30	2.40
E1	1.25	1.30	1.35
e	0.65BSC		
e1	1.30BSC		
L	0.28	0.33	0.38
L1	0.50REF		
L2	0.15BSC		
R	0.10	-	-
R1	0.10	-	0.25
Θ	0°	-	8°
Θ1	6°	9°	12°
Θ2	6°	9°	12°

© 2021 DIOO MICROCIRCUITS CO., LTD

Physical Dimensions: SOT23-5

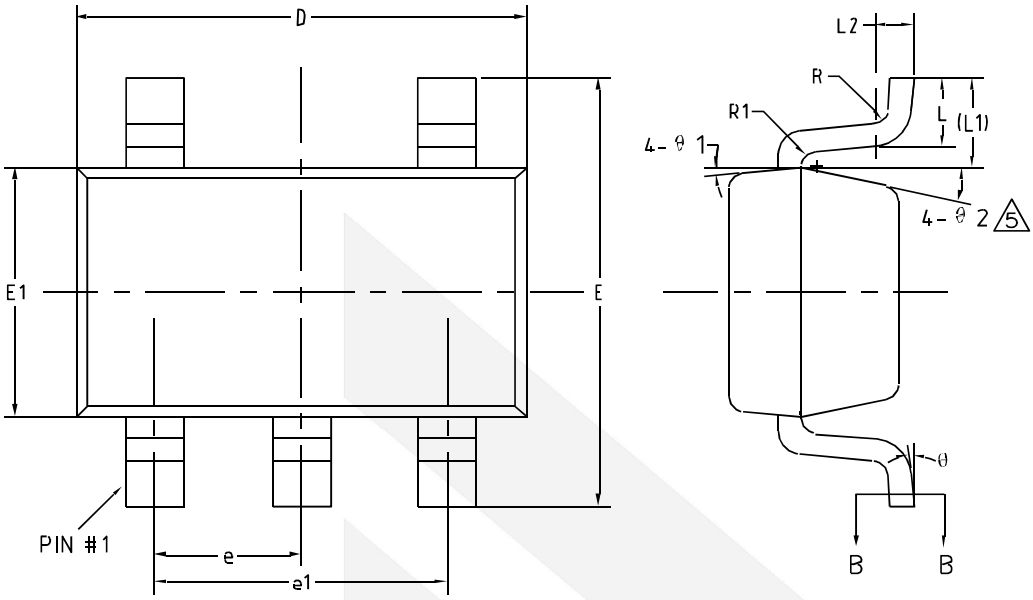

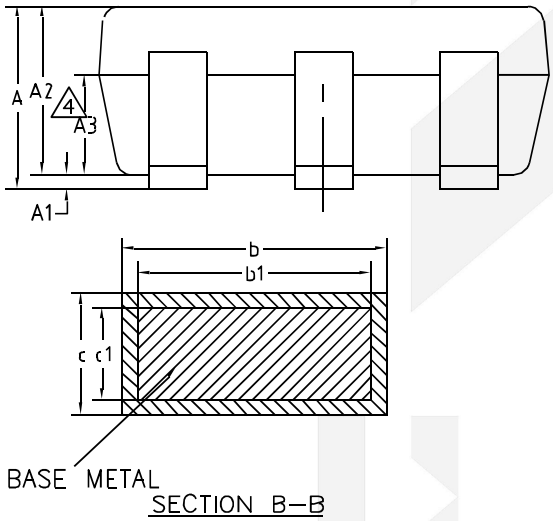

COMMON DIMENSIONS (UNITS OF MEASURE=MILLIMETER)			
Symbol	**MIN**	**NOM**	**MAX**
A	-	-	1.25
A1	0	-	0.15
A2	1.00	1.10	1.20
A3	0.60	0.65	0.70
b	0.36	-	0.50
b1	0.36	0.38	0.45
c	0.14	-	0.20
c1	0.14	0.15	0.16
D	2.826	2.926	3.026
E	2.60	2.80	3.00
E1	1.526	1.626	1.726
e	0.90	0.95	1.00
e1	1.80	1.90	2.00
L	0.35	0.45	0.60
L1	0.59REF		
L2	0.25BSC		
R	0.10	-	-
R1	0.10	-	0.25
Θ	0°	-	8°
Θ1	3°	5°	7°
Θ2	6°	-	14°

© 2021 DIOO MICROCIRCUITS CO., LTD

Physical Dimensions: DFN2*2-8

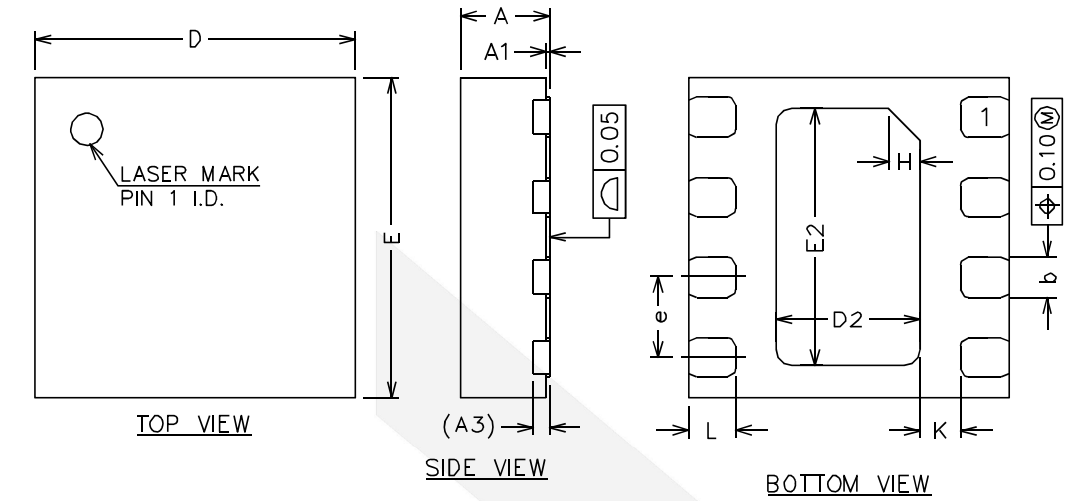



SIDE VIEW

COMMON DIMENSIONS (UNITS OF MEASURE=MILLIMETER)			
Symbol	**MIN**	**NOM**	**MAX**
A	0.50	0.55	0.65
A1	0.00	0.02	0.05
A3		0.10REF	
b	0.20	0.25	0.30
D	1.90	2.00	2.10
E	1.90	2.00	2.10
D2	0.80	0.90	1.00
E2	1.50	1.60	1.70
e	0.40	0.50	0.60
H		0.20REF	
K	0.15	0.25	0.35
L	0.25	0.30	0.35

© 2021 DIOO MICROCIRCUITS CO., LTD

Physical Dimensions: DFN3*3-8

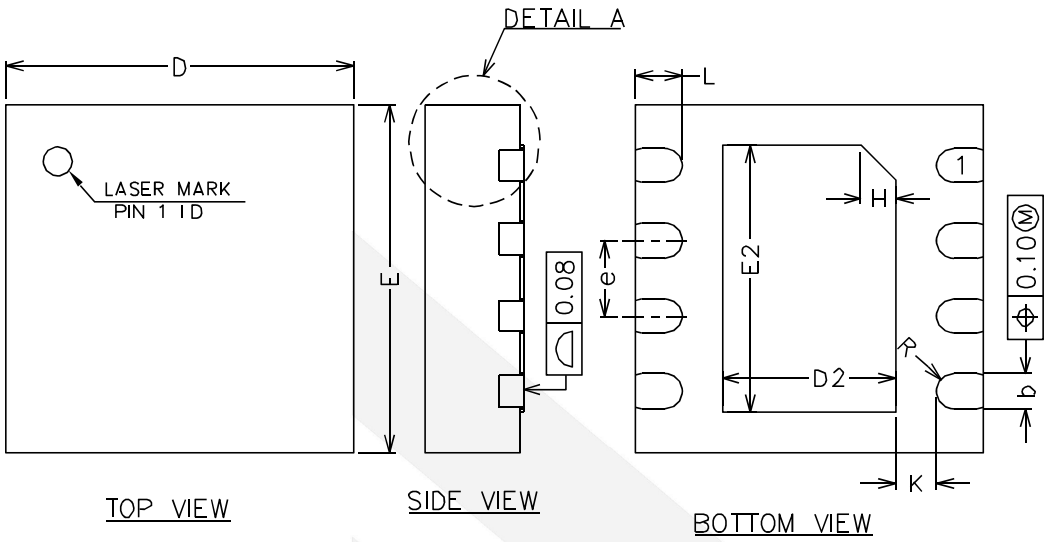



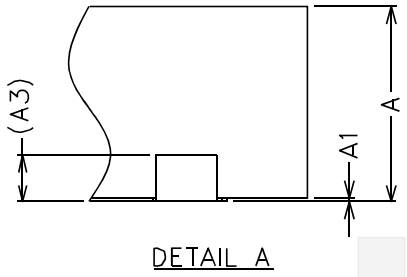

COMMON DIMENSIONS (UNITS OF MEASURE=MILLIMETER)			
Symbol	**MIN**	**NOM**	**MAX**
A	0.80	0.85	0.90
A1	0.00	0.02	0.05
A3		0.20REF	
b	0.25	0.30	0.35
D	2.90	3.00	3.10
E	2.90	3.00	3.10
D2	1.40	1.50	1.60
E2	2.20	2.30	2.40
e	0.55	0.65	0.75
H		0.30REF	
K	0.25	0.35	0.45
L	0.35	0.40	0.45
R	0.13	-	-

© 2021 DIOO MICROCIRCUITS CO., LTD

Physical Dimensions: SOIC-8

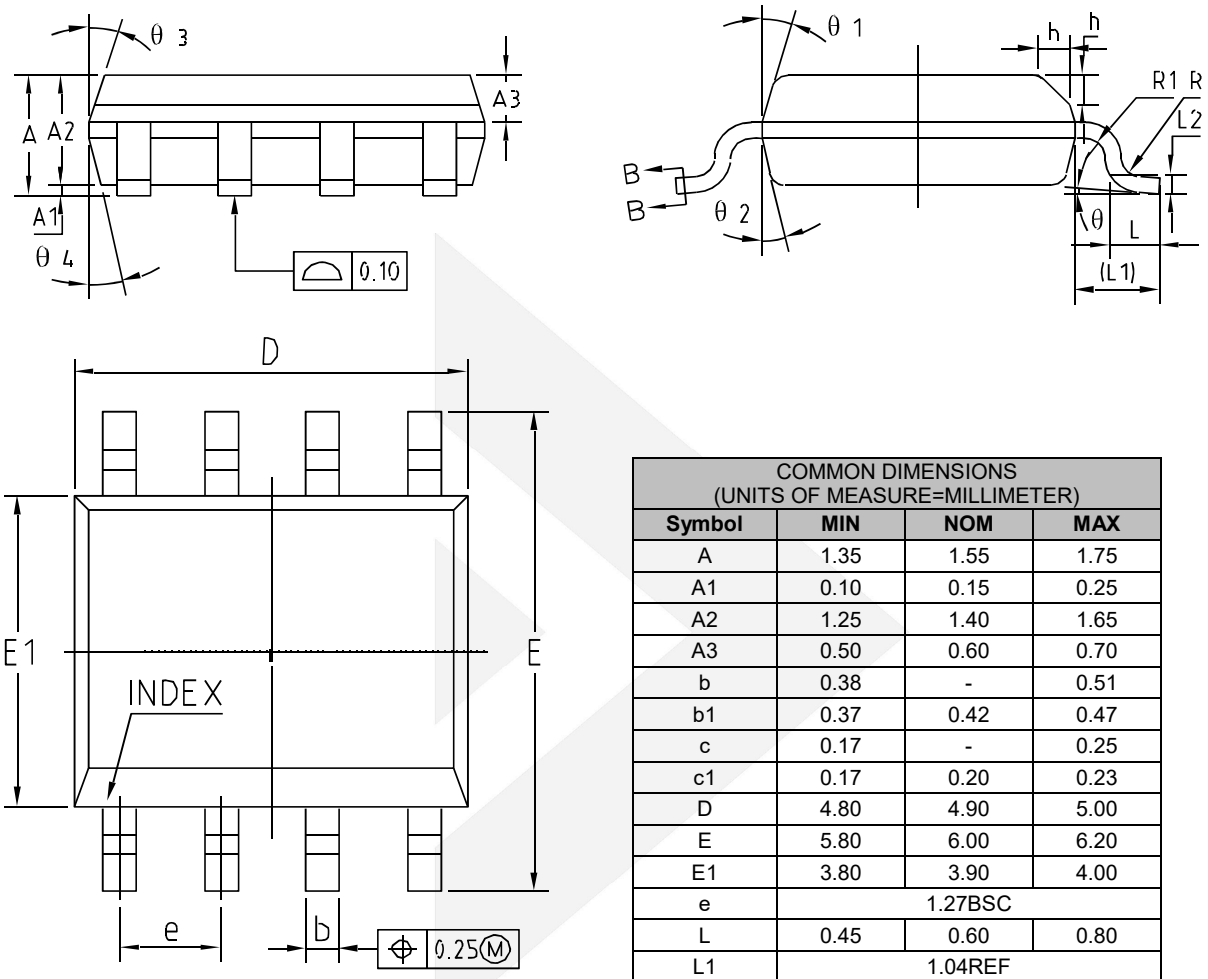

COMMON DIMENSIONS (UNITS OF MEASURE=MILLIMETER)			
Symbol	**MIN**	**NOM**	**MAX**
A	1.35	1.55	1.75
A1	0.10	0.15	0.25
A2	1.25	1.40	1.65
A3	0.50	0.60	0.70
b	0.38	-	0.51
b1	0.37	0.42	0.47
c	0.17	-	0.25
c1	0.17	0.20	0.23
D	4.80	4.90	5.00
E	5.80	6.00	6.20
E1	3.80	3.90	4.00
e	1.27BSC		
L	0.45	0.60	0.80
L1	1.04REF		
L2	0.25BSC		
R	0.07	-	-
R1	0.07	-	-
h	0.30	0.40	0.50
Θ	0°	-	8°
Θ1	15°	17°	19°
Θ2	11°	13°	15°
Θ3	15°	17°	19°
Θ4	11°	13°	15°

© 2021 DIOO MICROCIRCUITS CO., LTD

Physical Dimensions: MSOP-8

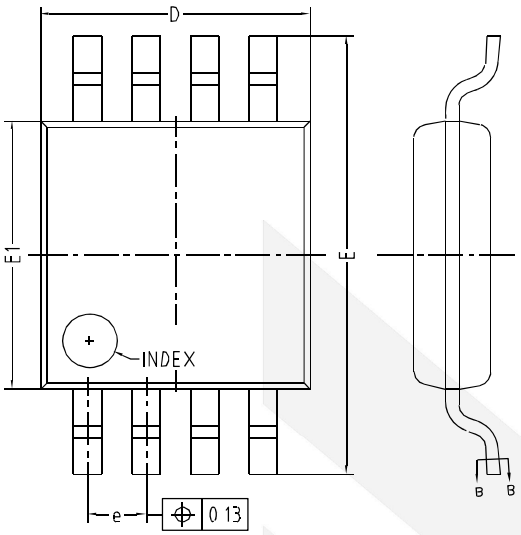

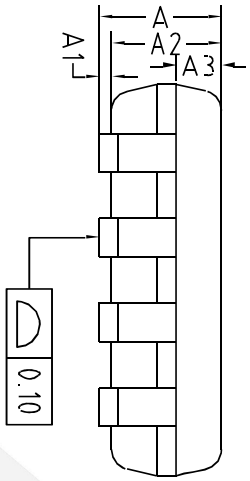

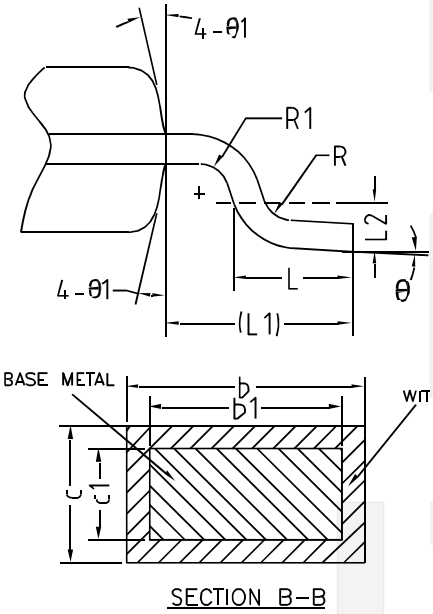

COMMON DIMENSIONS (UNITS OF MEASURE=MILLIMETER)			
Symbol	**MIN**	**NOM**	**MAX**
A	-	-	1.10
A1	0	-	0.15
A2	0.75	0.85	0.95
A3	0.25	0.35	0.39
b	0.28	-	0.37
b1	0.27	0.30	0.33
c	0.15	-	0.20
c1	0.14	0.15	0.16
D	2.90	3.00	3.10
E	4.70	4.90	5.10
E1	2.90	3.00	3.10
e	0.55	0.65	0.75
L	0.40	0.60	0.80
L1	0.95REF		
L2	0.25BSC		
R	0.07	-	-
R1	0.07	-	-
Θ	0°	-	8°
Θ1	9°	12°	15°

© 2021 DIOO MICROCIRCUITS CO., LTD

CONTACT US

Dioo is a professional design and sales corporation for high-quality and performance analog semiconductors. The company focuses on industry markets, such as, cell phone, handheld products, laptop, and medical equipment and so on. Dioo's product families include analog signal processing and amplifying, LED drivers and charger IC. Go to http://www.dioo.com for a complete list of Dioo product families.

For additional product information, or full datasheet, please contact with our Sales Department or Representatives.

© 2021 DIOO MICROCIRCUITS CO., LTD