DIO238X

Ultra-Low Offset Voltage, Low Power Amplifier

Description

The DIO238X is a family of ultra-low offset voltage (VOS) operational amplifiers, with rail-to-rail CMOS input/output and single/dual/quad channels selectable. The DIO238X family has a gain-bandwidth product of 450 kHz (typ.), wide operating supply voltage from 2.5 to 5.5 V, and broad output voltage swing.

The DIO238X consumes ultra-low power, with each channel 38 μA of bias current, which makes the DIO238X ideal for battery-powered devices, temperature-sense devices, etc.

Features

- Ultra-low V_{OS}:
  DIO2381A/ 2A/ 4A: V_{OS} = ±5 μV
  DIO2381B/ 2B/ 4B: V_{OS} = ±10 μV
  DIO2381C/ 2C/ 4C: V_{OS} = ±20 μV
- Low power: 38 μA
- Unity gain stable
- Gain bandwidth product: 450 kHz (typ.)
- Wide supply range: 2.5 to 5.5 V
- Available in SOT23-5, SC70-5, SOP-8, SOP-14, MSOP-8, DFN2*2-8, DFN3*3-8 and TSSOP-14 packages
- Temperature range:
  Industrial: -40 to 85° C
  Extended: -40 to 125° C

Applications

- Active filters
- Data acquisition
- Portable equipment
- Test equipment
- Broadband communication
- Process control
- Audio and video processing

Schematic Diagram

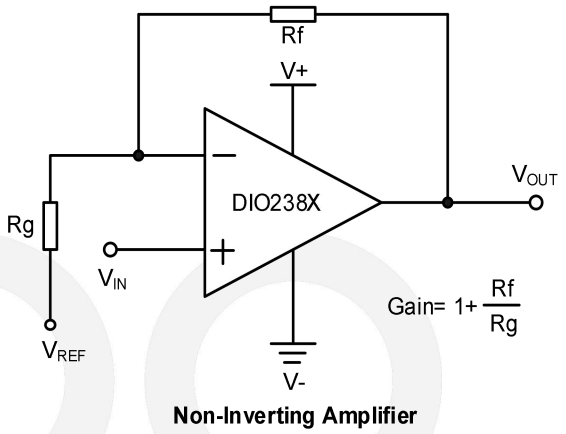

Non-Inverting Amplifier

© 2023 DIOO MICROCIRCUITS CO., LTD.

Ordering Information

Part No.	Top Marking	RoHS	T_A	Package	
DIO2381ASC5	YW8A	Green	-40 to 125°C	SC70-5	Tape & Reel, 3000
DIO2381BSC5	YW8B	Green	-40 to 125°C	SC70-5	Tape & Reel, 3000
DIO2381CSC5	YW8C	Green	-40 to 125°C	SC70-5	Tape & Reel, 3000
DIO2381AST5	YW8AA	Green	-40 to 125°C	SOT23-5	Tape & Reel, 3000
DIO2381BST5	YW8AB	Green	-40 to 125°C	SOT23-5	Tape & Reel, 3000
DIO2381CST5	YW8AC	Green	-40 to 125°C	SOT23-5	Tape & Reel, 3000
DIO2382ACN8	BC8A	Green	-40 to 125°C	DFN2*2-8	Tape & Reel, 3000
DIO2382BCN8	BC8B	Green	-40 to 125°C	DFN2*2-8	Tape & Reel, 3000
DIO2382CCN8	BC8C	Green	-40 to 125°C	DFN2*2-8	Tape & Reel, 3000
DIO2382ACD8	BC8BA	Green	-40 to 125°C	DFN3*3-8	Tape & Reel, 5000
DIO2382BCD8	BC8BB	Green	-40 to 125°C	DFN3*3-8	Tape & Reel, 5000
DIO2382CCD8	BC8BC	Green	-40 to 125°C	DFN3*3-8	Tape & Reel, 5000
DIO2382ASO8	DIOC8BA	Green	-40 to 125°C	SOP-8	Tape & Reel, 2500
DIO2382BSO8	DIOC8BB	Green	-40 to 125°C	SOP-8	Tape & Reel, 2500
DIO2382CSO8	DIOC8BC	Green	-40 to 125°C	SOP-8	Tape & Reel, 2500
DIO2382AMP8	DIOBC8BA	Green	-40 to 125°C	MSOP-8	Tape & Reel, 3000
DIO2382BMP8	DIOBC8BB	Green	-40 to 125°C	MSOP-8	Tape & Reel, 3000
DIO2382CMP8	DIOBC8BC	Green	-40 to 125°C	MSOP-8	Tape & Reel, 3000
DIO2384ATP14	DIOC8DA	Green	-40 to 125°C	TSSOP-14	Tape & Reel, 2500
DIO2384BTP14	DIOC8DB	Green	-40 to 125°C	TSSOP-14	Tape & Reel, 2500
DIO2384CTP14	DIOC8DC	Green	-40 to 125°C	TSSOP-14	Tape & Reel, 2500
DIO2384ASO14	DIOC8DA	Green	-40 to 125°C	SOP-14	Tape & Reel, 2500
DIO2384BSO14	DIOC8DB	Green	-40 to 125°C	SOP-14	Tape & Reel, 2500
DIO2384CSO14	DIOC8DC	Green	-40 to 125°C	SOP-14	Tape & Reel, 2500

If you encounter any issue in the process of using the device, please contact our customer service at marketing@dioo.com or phone us at (+86)-21-62116882. If you have any improvement suggestions regarding the datasheet, we encourage you to contact our technical writing team at docs@dioo.com. Your feedback is invaluable for us to provide a better user experience.

© 2023 DIOO MICROCIRCUITS CO., LTD.

Table of Contents

1. Pin Assignment and Functions 1
2. Absolute Maximum Ratings 2
3. Recommended Operating Condition 2
4. ESD Ratings 2
5. Thermal Considerations 3
6. Electrical Characteristics 3
7. Typical Characteristics 4
8. Physical Dimensions 6
8.1. SC70-5 6
8.2. SOT23-5 7
8.3. DFN2*2-8 8
8.4. DFN3*3-8 9
8.5. SOP-8 10
8.6. MSOP-8 11
8.7. TSSOP-14 12
8.8. SOP-14 13

List of Figures

Figure 1. Supply current vs. Supply voltage 4
Figure 2. Offset voltage vs. Supply voltage 4
Figure 3. Supply current vs. Temperature 4
Figure 4. Offset voltage vs. Common voltage 4
Figure 5. Large signal response 5
Figure 6. Small signal response (C_L = No Cap) 5
Figure 7. Small signal response (C_L = 200 pF) 5

 © 2023 DIOO MICROCIRCUITS CO., LTD.

1. Pin Assignment and Functions

SOT23-5 / SC70-5

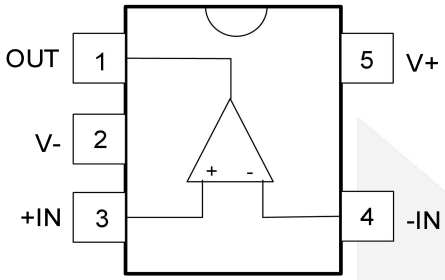

DIO2381

MSOP-8 / SOP-8

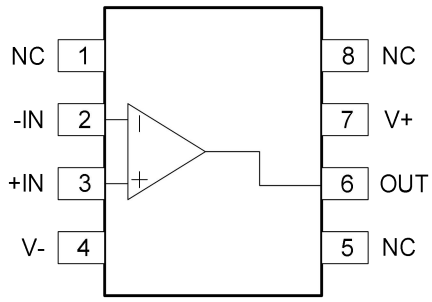

DIO2381

DFN2*2-8 / DFN3*3-8

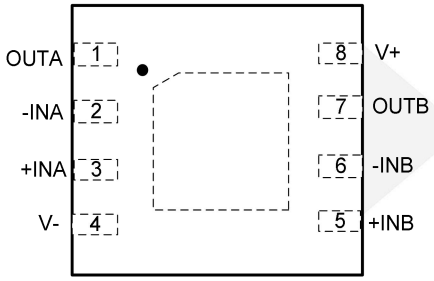

DIO2382

MSOP-8 / SOP-8

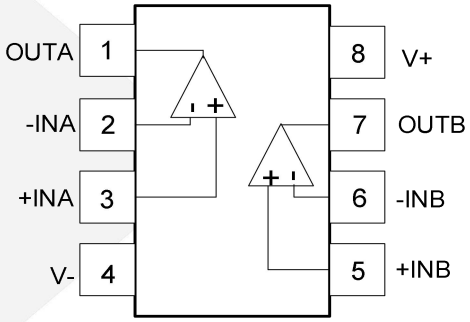

DIO2382

TSSOP-14 / SOP-14

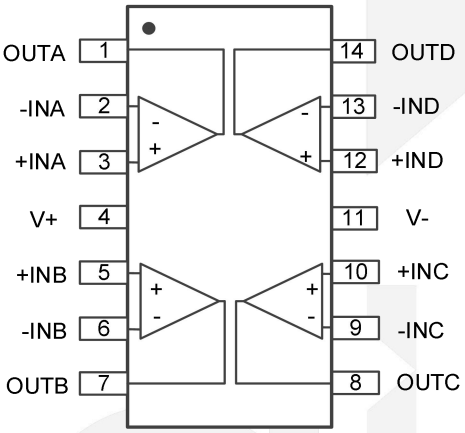

DIO2384

Top view

Name	I/O	Description
V+	I	Positive supply
V-	I	Negative supply
+INX	I	Positive input
-INX	I	Negative input
OUTX	O	Output
NC	-	Do not connect

NOTE: X = A, B, C, D

 © 2023 DIOO MICROCIRCUITS CO., LTD.

2. Absolute Maximum Ratings

Exceeding the maximum ratings listed under Absolute Maximum Ratings when designing is likely to damage the device permanently. Do not design to the maximum limits because long-time exposure to them might impact the device's reliability. The ratings are obtained over an operating free-air temperature range unless otherwise specified.

Symbol	Parameter	Ratings	Unit
V+	Positive supply	7	V
V_{IN}	Input voltage	(V-) - 0.3 V to (V+) + 0.3 V	V
V_{ID}	Difference input voltage	|V+ – V-|	V
T_{STG}	Storage temperature range	-65 to 150	V
T_J	Junction temperature	150	V
T_L	Lead temperature range	260	mA

3. Recommended Operating Condition

Recommended operating conditions are specified to ensure optimal performance to the datasheet specifications. The ratings are obtained over an operating free-air temperature range unless otherwise specified.

Symbol	Parameter	Ratings	Unit
V+	Positive supply	2.5 to 5.5	V
V_{IN}	Input voltage	0 to V+	V
T_A	Operating free-air temperature	-40 to 125	ºC

4. ESD Ratings

When a statically-charged person or object touches an electrostatic discharge sensitive device, the electrostatic charge might be drained through sensitive circuitry in the device. If the electrostatic discharge possesses sufficient energy, damage might occur to the device due to localized overheating.

Model	Condition	Value	Unit
Human-body model	JEDEC: JESD22-A114	±8000	V

 © 2023 DIOO MICROCIRCUITS CO., LTD.

5. Thermal Considerations

The thermal resistance determines the heat insulation property of a material. The higher the thermal resistance is, the lower the heat loss. Accumulation of heat energy degrades the performance of semiconductor components.

Symbol	Metric	Value					Unit
		SOP-8	MSOP-8	SOT23-5	SC70-5	DFN3*3-8	
$R_{\theta JA}$	Junction-to-ambient thermal resistance	140	180	221	425	130	°C/W

6. Electrical Characteristics

The values are obtained under these conditions unless otherwise specified: V_{CC} = 5 V, R_L = 1 MΩ to V+/2, V_{CM} = 1/2V+, T_A = 25°C

Symbol	Parameter	Conditions		Min	Typ	Max	Unit
Input characteristics							
V_{OS}	Input offset voltage	V+ = 2.5 to 5.5 V	DIO2381A/ 2A/ 4A	-5		5	μV
		V+ = 2.5 to 5.5 V	DIO2381B/ 2B/ 4B	-10		10	
		V+ = 2.5 to 5.5 V	DIO2381C/ 2C/ 4C	-20		20	
I_B(1)	Input bias current	V+ = 2.5 to 5.5 V			10		pA
V_{CM}	Common mode voltage range			-0.1		(V+) +0.1	V
CMRR	Common mode rejection ratio	-40°C ≤ T_A ≤ 125°C			130		dB
A_{OL}(1)	Open loop voltage gain	R_L = 50 kΩ, V_O = 0.1 to (V+)-0.1		80	110		dB
$\Delta V_{OS}/\Delta T$	Input offset voltage drift	-40°C ≤ T_A ≤ 125°C			0.05		μV/°C
Output characteristics							
V_{OH}	Output voltage high	R_L = 50 kΩ, -40°C ≤ T_A ≤ 125°C			4.992		V
V_{OL}	Output voltage low	R_L = 50 kΩ, -40°C ≤ T_A ≤ 125°C			8	15	mV
I_{SC}	Output short circuit current	Source I_{SC}, V+ = 5 V			39		mA
		Sink I_{SC}, V+ = 5 V			41		
		Source I_{SC}, V+ = 2.5 V			8.5		
		Sink I_{SC}, V+ = 2.5 V			10		
Power supply							
PSRR	Power supply rejection ration			100			dB
I_S	Supply current per channel/amp	-40°C ≤ T_A ≤ 125°C			38	70	μA
Dynamic performance							
GBP	Gain bandwidth product	C_L = 100 pF, R_L = 1 MΩ			450		kHz
SR	Slew rate	G = 1, 2 V output step			0.3		V/μs
t_S	Settling time	G = 1, 2 V output step			20		μs
θm(1)	Phase margin				62		Deg

 © 2023 DIOO MICROCIRCUITS CO., LTD.

t_{OR}	Overload recovery time	V_S = 5 V, G = -10, V_{IN} = 260 mVpp, Offset = 130 mV		70		µs
Noise performance						
THD	Total harmonic distortion	f = 1 kHz, 4 V_{PP}, R_L = 5 kΩ		0.011		%
		f = 1 kHz, 2 V_{PP}, R_L = 5 kΩ		0.009		
e_n	Voltage noise density	f = 1 kHz		68		nV/√Hz
	Voltage noise	f = 0.1 to 10 Hz		1.412		µVpp

Note:

(1) Guaranteed by design.

(2) Specifications subject to change without notice.

7. Typical Characteristics

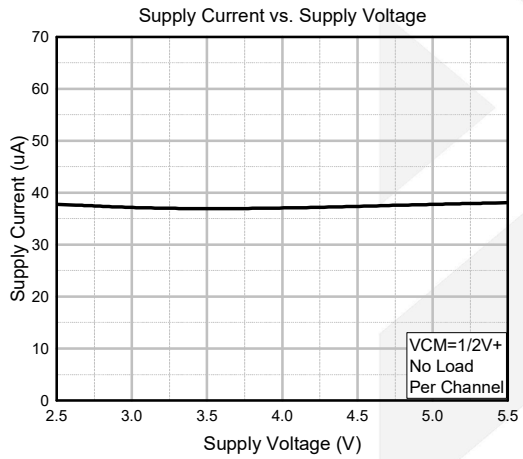

Figure 1. Supply current vs. Supply voltage

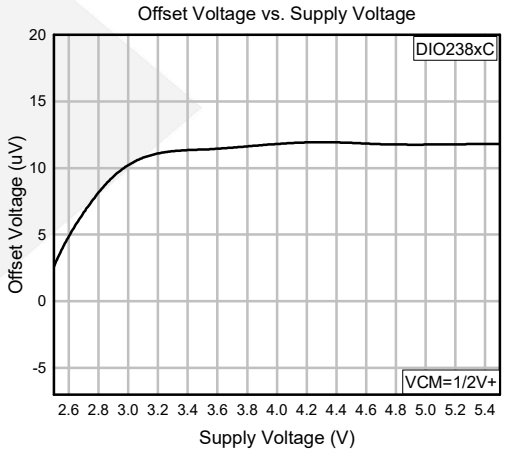

Figure 2. Offset voltage vs. Supply voltage

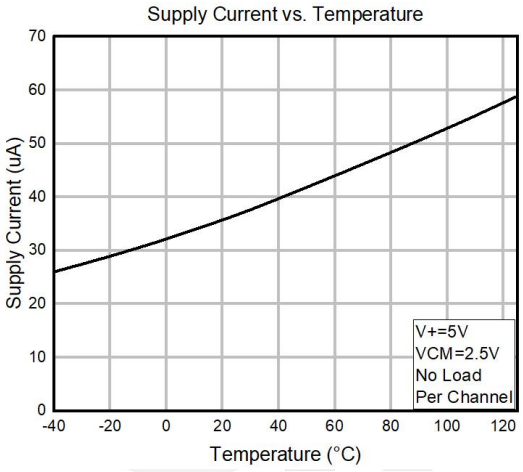

Figure 3. Supply current vs. Temperature

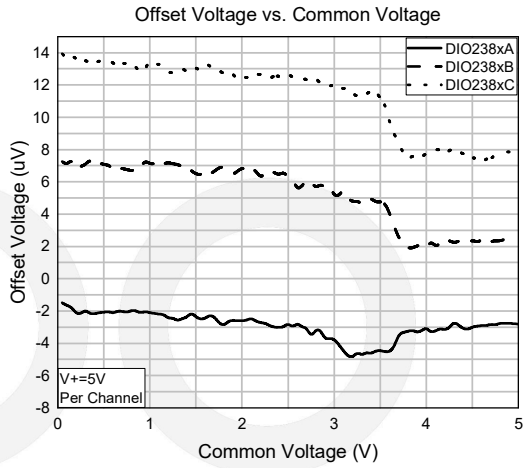

Figure 4. Offset voltage vs. Common voltage

 © 2023 DIOO MICROCIRCUITS CO., LTD.

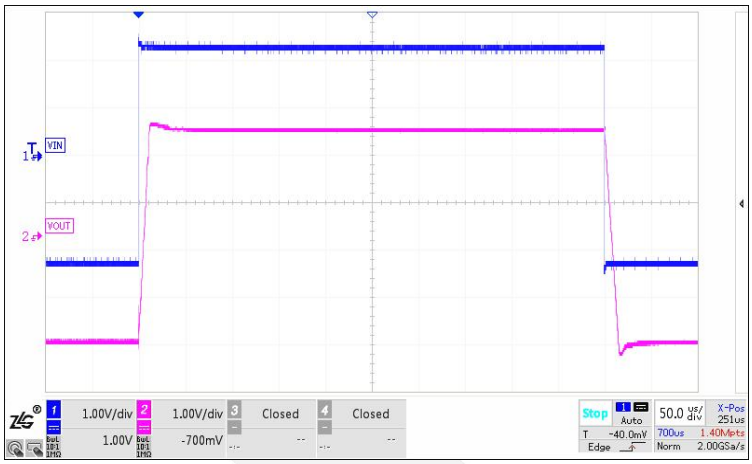

V_{CC} = 5 V, V_{CM} = 0 V, G = 1, R_L = 5.1 kΩ

Figure 5. Large signal response

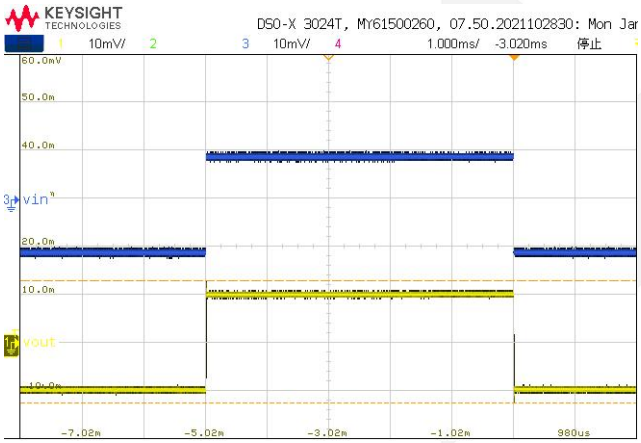

Figure 6. Small signal response (C_L = No Cap)

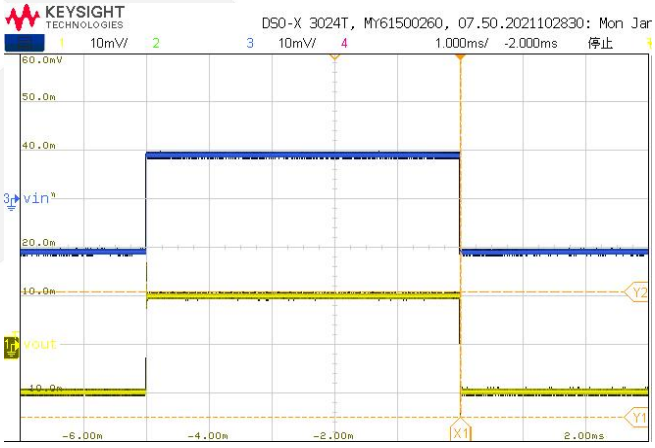

Figure 7. Small signal response (C_L = 200 pF)

 © 2023 DIOO MICROCIRCUITS CO., LTD.

8. Physical Dimensions

8.1. SC70-5

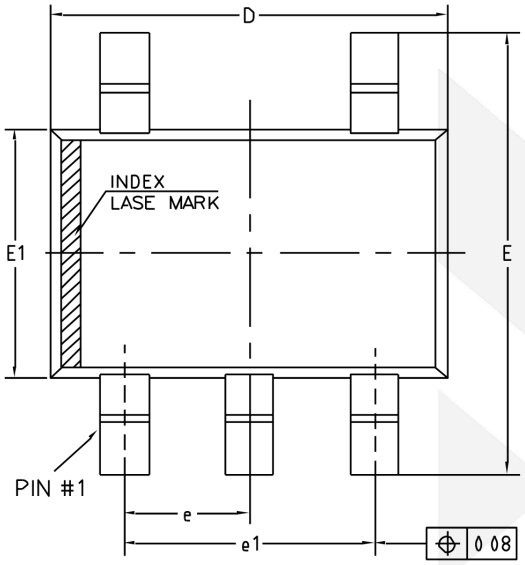

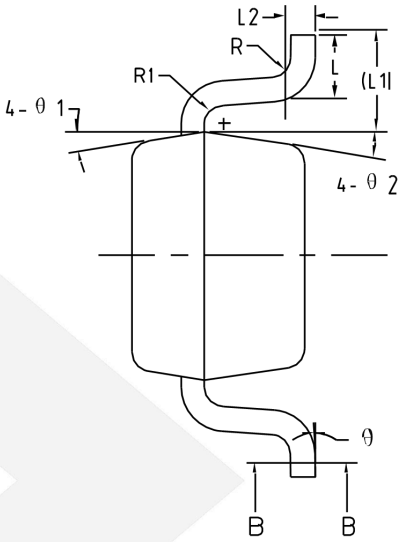

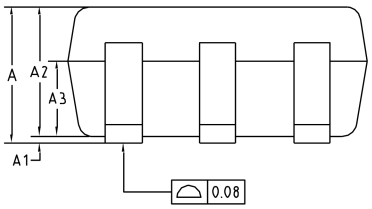

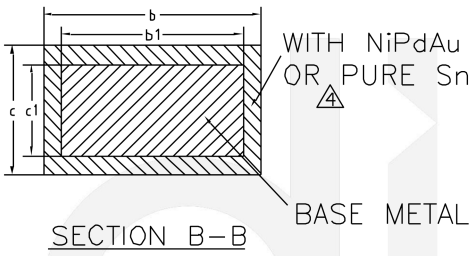

Common Dimensions (Units of measure = Millimeter)			
Symbol	**Min**	**Nom**	**Max**
A	0.85	-	1.05
A1	0	-	0.10
A2	0.80	0.90	1.00
A3	0.47	0.52	0.57
b	0.23	-	0.33
b1	0.22	0.25	0.28
c	0.12	-	0.18
c1	0.115	0.13	0.14
D	2.02	2.07	2.12
E	2.20	2.30	2.40
E1	1.25	1.30	1.35
e		0.65 BSC	
e1		1.30 BSC	
L	0.28	0.33	0.38
L1		0.50 REF	
L2		0.15 BSC	
R	0.10	-	-
R1	0.10	-	0.25
θ	0°	-	8°
θ1	6°	9°	12°
θ2	6°	9°	12°

© 2023 DIOO MICROCIRCUITS CO., LTD.

8.2. SOT23-5

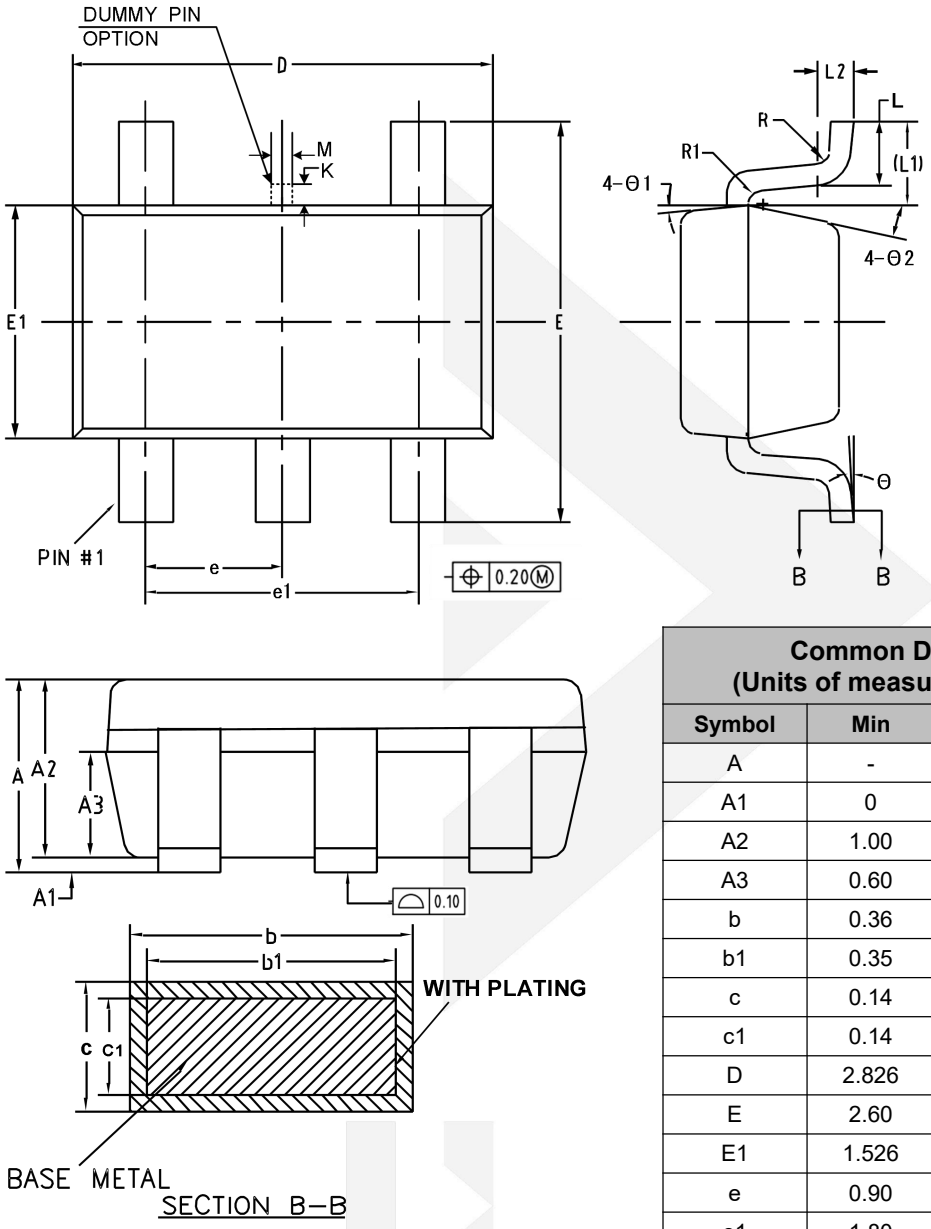

Common Dimensions (Units of measure = Millimeter)			
Symbol	**Min**	**Nom**	**Max**
A	-	-	1.25
A1	0	-	0.15
A2	1.00	1.10	1.20
A3	0.60	0.65	0.70
b	0.36	-	0.45
b1	0.35	0.38	0.41
c	0.14	-	0.20
c1	0.14	0.15	0.16
D	2.826	2.926	3.026
E	2.60	2.80	3.00
E1	1.526	1.626	1.726
e	0.90	0.95	1.00
e1	1.80	1.90	2.00
K	0	-	0.25
L	0.30	0.40	0.60
L1	0.59 REF		
L2	0.25 BSC		
M	0.10	0.15	0.25
R	0.05	-	0.20
R1	0.05	-	0.20
θ	0°	-	8°
θ1	8°	10°	12°
θ2	10°	12°	14°

 © 2023 DIOO MICROCIRCUITS CO., LTD.

8.3. DFN2*2-8

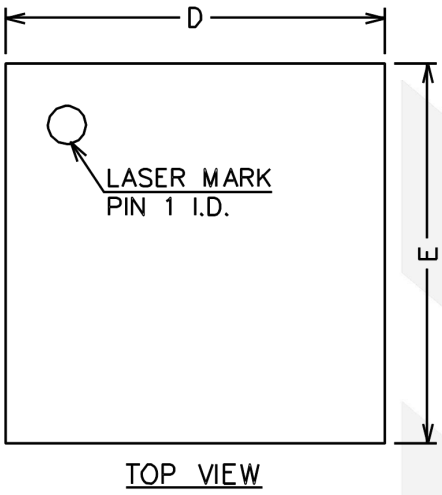

TOP VIEW

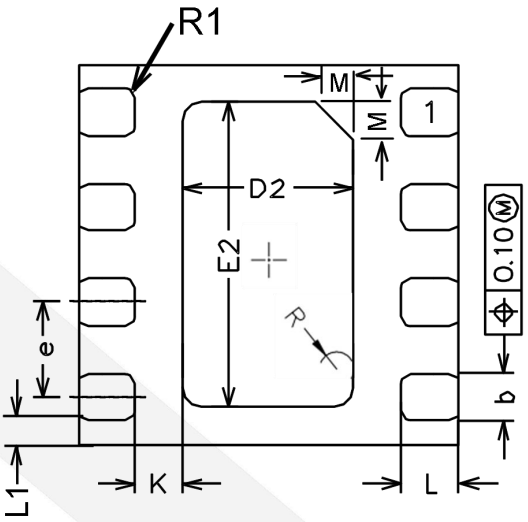

BOTTOM VIEW

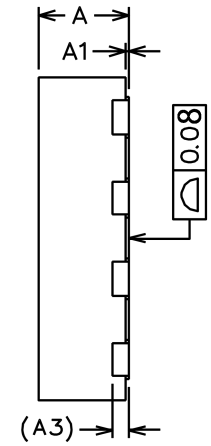

SIDE VIEW



SIDE VIEW

Common Dimensions (Units of measure = Millimeter)			
Symbol	**Min**	**Nom**	**Max**
A	0.50	0.55	0.60
A1	0.00	0.02	0.05
A3		0.127 REF	
b	0.20	0.25	0.30
D	1.95	2.00	2.05
E	1.95	2.00	2.05
D2	0.80	0.90	1.00
E2	1.50	1.60	1.70
e	0.45	0.50	0.55
K	0.15	0.25	0.35
L	0.25	0.30	0.35
L1	0.075	0.125	0.175
M		0.20 REF	
R		0.10 REF	
R1		0.05 REF	

 © 2023 DIOO MICROCIRCUITS CO., LTD.

8.4. DFN3*3-8

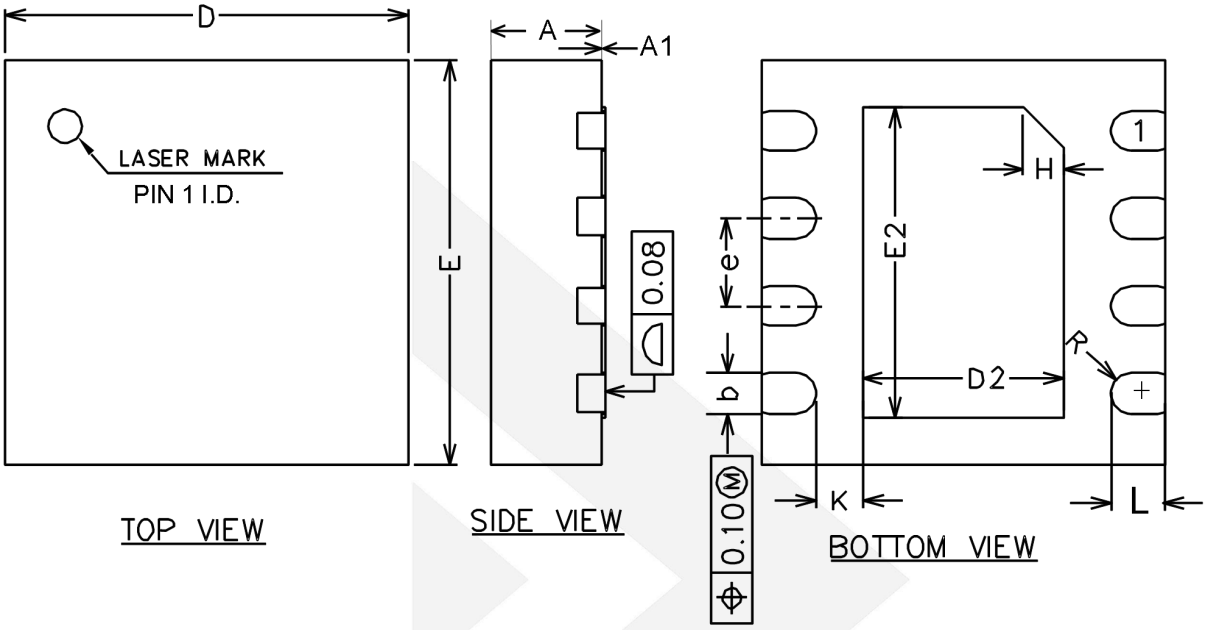



SIDE VIEW

Common Dimensions (Units of measure = Millimeter)			
Symbol	**Min**	**Nom**	**Max**
A	0.70	0.75	0.80
A1	0.00	0.02	0.05
A3		0.20 REF	
b	0.30	0.35	0.40
D	2.90	3.00	3.10
E	2.90	3.00	3.10
D2	1.50	1.60	1.70
E2	2.30	2.40	2.50
e	0.55	0.65	0.75
H		0.30 REF	
K	0.20	0.30	0.40
L	0.30	0.40	0.50
R	0.16	-	-

© 2023 DIOO MICROCIRCUITS CO., LTD.

8.5. SOP-8

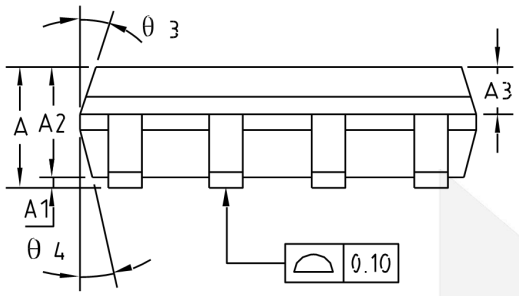

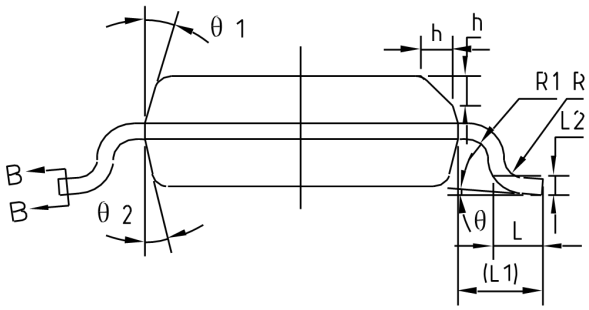

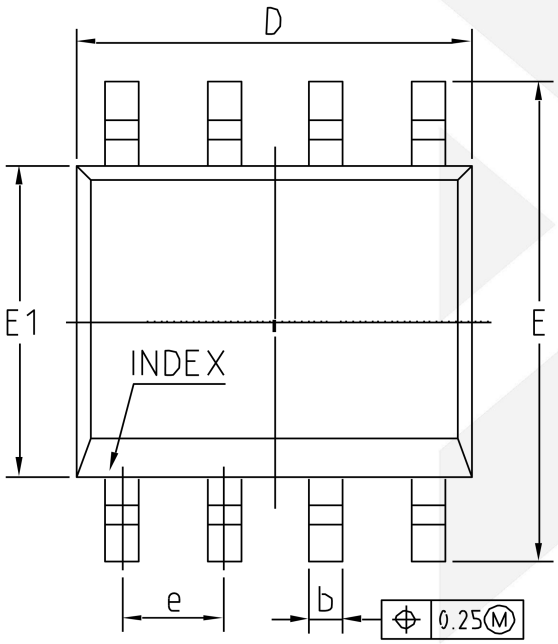

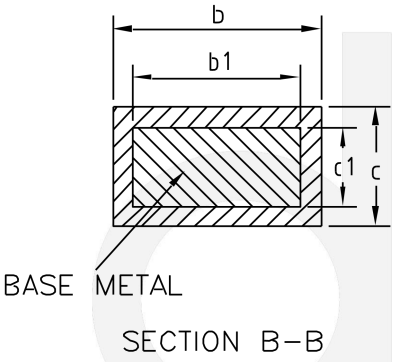

SECTION B–B

Common Dimensions (Units of measure = Millimeter)			
Symbol	**Min**	**Nom**	**Max**
A	1.35	1.55	1.75
A1	0.10	0.15	0.25
A2	1.25	1.40	1.65
A3	0.50	0.60	0.70
b	0.38	-	0.51
b1	0.37	0.42	0.47
c	0.17	-	0.25
c1	0.17	0.20	0.23
D	4.80	4.90	5.00
E	5.80	6.00	6.20
E1	3.80	3.90	4.00
e	1.27 BSC		
L	0.45	0.60	0.80
L1	1.04 REF		
L2	0.25 BSC		
R	0.07	-	-
R1	0.07	-	-
h	0.30	0.40	0.50
θ	0°	-	8°
θ1	15°	17°	19°
θ2	11°	13°	15°
θ3	15°	17°	19°
θ4	11°	13°	15°

 © 2023 DIOO MICROCIRCUITS CO., LTD.

8.6. MSOP-8

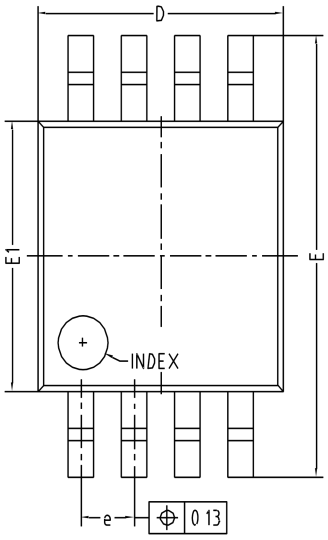

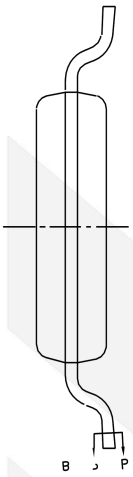

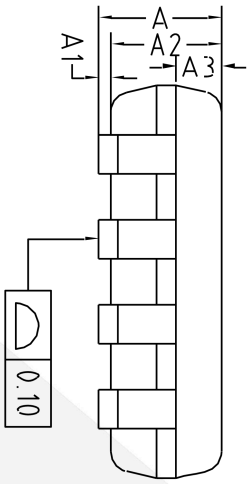

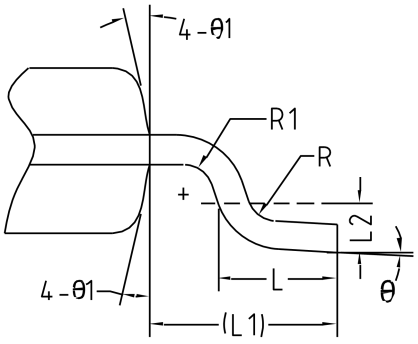

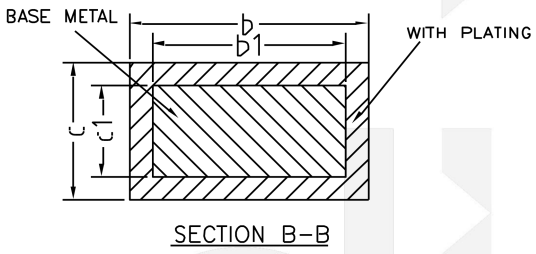

Common Dimensions (Units of measure = Millimeter)			
Symbol	**Min**	**Nom**	**Max**
A	-	-	1.10
A1	0	-	0.15
A2	0.75	0.85	0.95
A3	0.25	0.35	0.39
b	0.28	-	0.37
b1	0.27	0.30	0.33
c	0.15	-	0.20
c1	0.14	0.15	0.16
D	2.90	3.00	3.10
E	4.70	4.90	5.10
E1	2.90	3.00	3.10
e	0.55	0.65	0.75
L	0.40	0.60	0.80
L1	0.95 REF		
L2	0.25 BSC		
R	0.07	-	-
R1	0.07	-	-
θ	0°	-	8°
θ1	9°	12°	15°

 © 2023 DIOO MICROCIRCUITS CO., LTD.

8.7. TSSOP-14

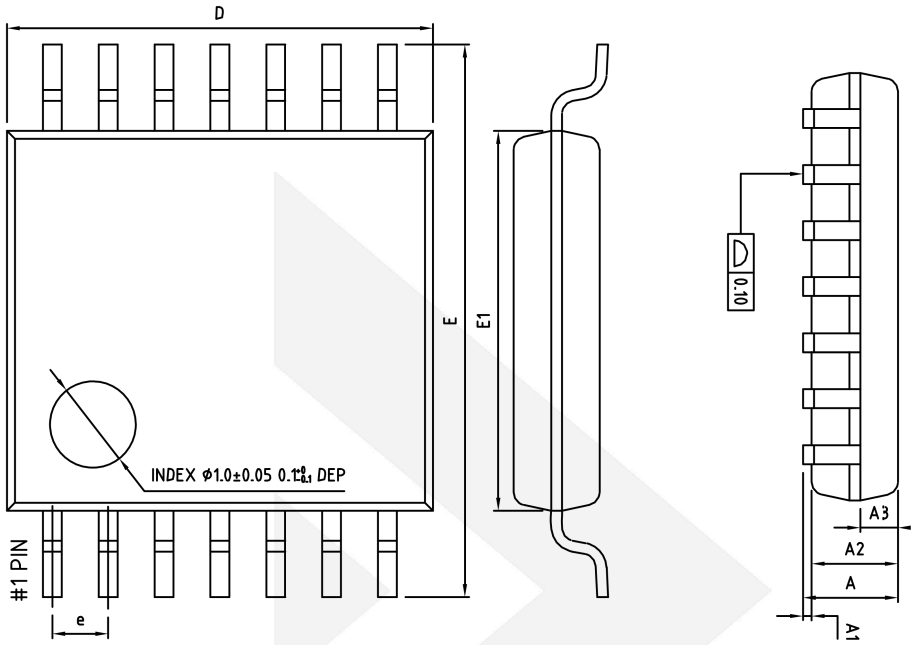

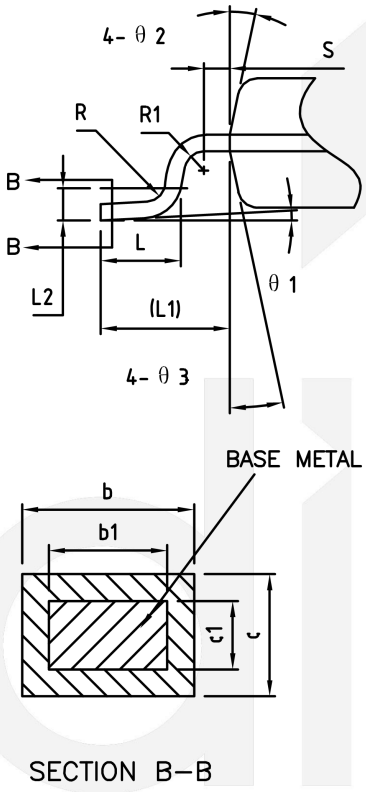

Common Dimensions (Units of measure = Millimeter)			
Symbol	**Min**	**Nom**	**Max**
A	-	-	1.20
A1	0.05	-	0.15
A2	0.90	1.00	1.05
A3	0.34	0.44	0.54
b	0.20	-	0.28
b1	0.20	0.22	0.24
c	0.10	-	0.19
c1	0.10	0.13	0.15
D	4.86	4.96	5.06
E	6.20	6.40	6.60
E1	4.30	4.40	4.50
e	0.65 BSC		
L	0.45	0.60	0.75
L1	1.00 REF		
L2	0.25 BSC		
R	0.09	-	-
R1	0.09	-	-
S	0.20	-	-
θ1	0°	-	8°
θ2	10°	12°	14°
θ3	10°	12°	14°

 © 2023 DIOO MICROCIRCUITS CO., LTD.

8.8. SOP-14

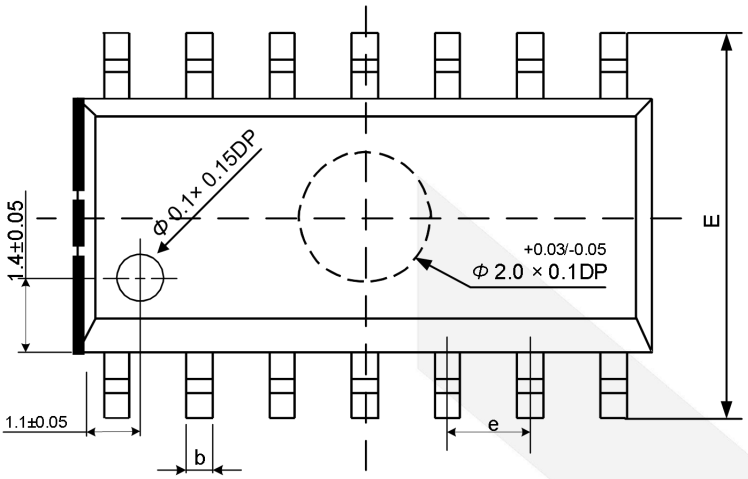

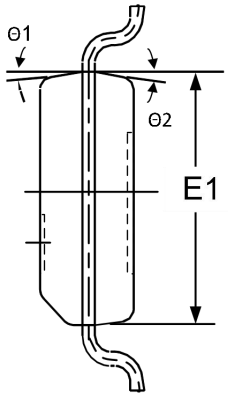

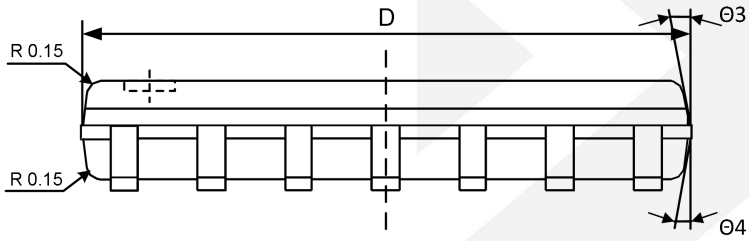

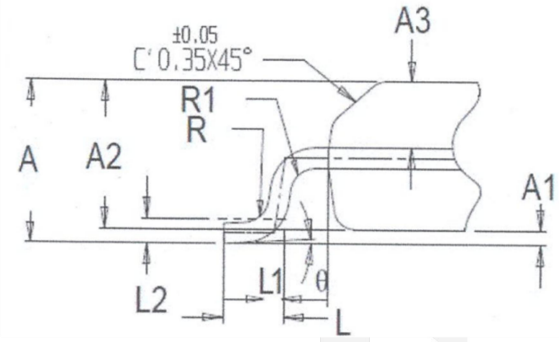

Common Dimensions Units of measure = Millimeter			
Symbol	**Min**	**Nom**	**Max**
A	-	-	1.70
A1	0.10	0.15	0.20
A2	1.40	1.45	1.50
A3	0.62	0.65	0.68
b	0.375	0.400	0.425
D	8.53	8.63	8.73
E	5.90	6. 00	6.10
E1	3.80	3. 90	3.95
e	1.245	1.270	1.295
L	0.50	0.60	0.70
L1	-	1.05 REF	-
L2	-	0.25 BSC	-
θ	0°	-	8°
θ1	11°	12°	13°
θ2	11°	12°	13'
θ3	11°	12°	13°
θ4	11°	12°	13°

© 2023 DIOO MICROCIRCUITS CO., LTD.

Disclaimer

This specification and information contained herein are provided on an “AS IS” basis and WITH ALL FAULTS. All product specifications, statements, information, and data (collectively, the“Information”) in this datasheet or made available on the website of www.dioo.com are subject to change without notice. The customer is responsible for checking and verifying the extent to which the Information contained in this publication is applicable to his/her application. All Information given herein is believed to be accurate and reliable, but it is presented without guarantee, warranty, or responsibility of any kind, express or implied.

 © 2023 DIOO MICROCIRCUITS CO., LTD.