DIO5840X

1 A, Single-Input, Single Cell Li-Ion and Li-Pol Battery Charger with Auto Start

Features

- Input rating of 3.5 V to 32 V
- Input overvoltage protection with 6.5 V
- Input voltage dynamic power management
- 10% charge current accuracy
- 1% charge voltage accuracy
- Pin ISET2 can select 100 mA or 500 mA maximum input current limit
- Programmable termination and trickle threshold
- Fixed 10 hour safety timer
- Status indication – charging/done
- Integrated auto start function for production
- 125°C thermal regulation
- 155°C thermal shutdown protection
- BAT short-circuit protection
- Charge solutions for JEITA
  (DIO5840A):
  1. No charge at temp > 50°C and temp < 0°C;
  2. 0.2*CC (Constant-current) temp at 0 ~ 10°C;
  3. Constant-current temp at 10 ~ 45°C;
  4. 0.5*CC & BAT voltage = V_{BAT} ~ 0.1 V temp at 45 ~ 50°C.

  (DIO5840B, DIO5840D):
  1. No charge at temp > 45°C and temp < 0°C;
  2. 0.2*CC (Constant-current) temp at 0 ~ 10°C;
  3. Constant-current temp at 10 ~ 45°C.
  4. DIO5840D has dedicated BAT_V pin for battery voltage sense.
- Automatic termination and timer disable mode (TTDM) for absent battery pack with thermistor
- Package: DFN2*2-10

Descriptions

The DIO5840X is a highly integrated lithium ion and lithium polymer linear charger, suitable for portable applications with limited space. The device is powered by a USB port or AC adapter. The high input voltage range with input overvoltage protection supports low-cost, unregulated adapters.

The DIO5840X has a single power output and can charge batteries. If the average system load fails to charge the battery during the 10 hour safety timer, the system load can be connected in parallel with the battery.

The device has three stages for charging a Li-Ion battery: regulation, constant current and constant voltage. In all charging stages, IC junction temperature is monitored by the internal control loop. When the charging current exceeds the internal temperature threshold, the internal control loop will reduce the charging current.

The charger power level and charging current induction function are fully integrated. The charger has high precision current and voltage regulation circuit function, charging status display, charging termination function. trickle-charge current and terminal current threshold can be programmed by external resistance on the DIO5840X. The value of constant current can also be programmed by an external resistance.

Applications

- Low-power handheld devices
- Smart phones
- MP3 players
- PDAs

© 2023 DIOO MICROCIRCUITS CO., LTD

Ordering Information

Order Part Number	Top Marking	RoHS	T_A	Package	
DIO5840ACN10	EV4A	Green	-40 to 85°C	DFN2*2-10	Tape & Reel, 3000
DIO5840BCN10	EV4B	Green	-40 to 85°C	DFN2*2-10	Tape & Reel, 3000
DIO5840DCN10	EV4D	Green	-40 to 85°C	DFN2*2-10	Tape & Reel, 3000

© 2023 DIOO MICROCIRCUITS CO., LTD

Pin Assignment

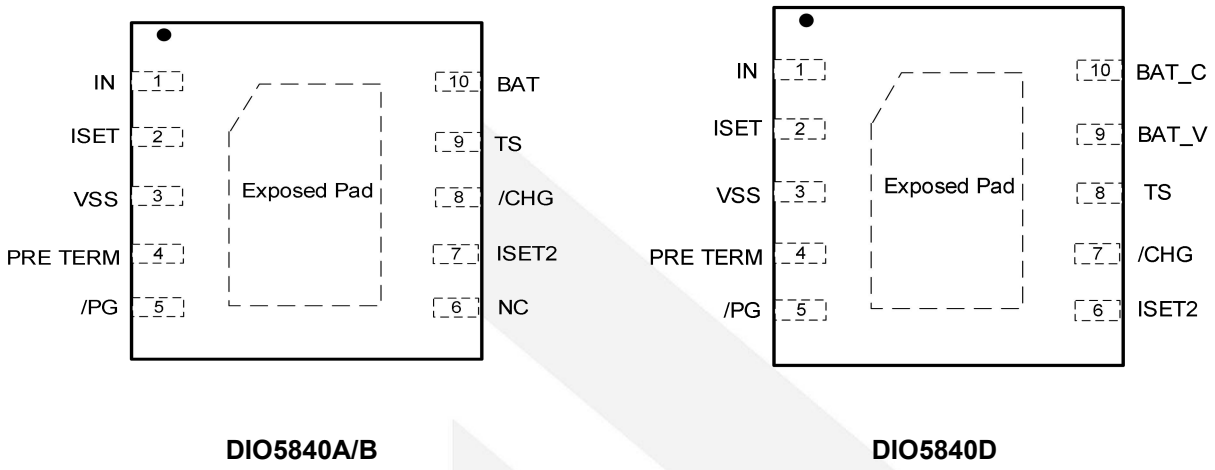

DIO5840A/B **DIO5840D**

Figure 1. DFN2*2-10 (Top view)

Pin Descriptions

Name	Description
IN	Input power, connected to external DC supply (AC adapter or USB port). Expected range of bypass capacitors 1 μF to 10 μF, connect from IN to VSS.
ISET	Programs the constant charge current setting. External resistor from ISET to VSS defines constant charge current value. Range is 9 kΩ (50 mA) to 0.45 kΩ (1000 mA).
ISET2	Programming the Input / Output current limit for the USB or Adaptor source: High = 500 mA max, Low = ISET, FLOAT = 100 mA max.
VSS	Ground.
PRE TERM	Programs the current termination threshold (10 to 40% of IBAT which is set by ISET) and Sets the Trickle Current to twice the Termination Current Level. Expected range of programming resistor is 1 k to 5.1 kΩ (2k: 0.12*CC for term; 0.24*CC for trickle current)
/PG	Low (FET on) indicates the input voltage is above UVLO and the BAT (battery) voltage.
NC	No connect.
/CHG	Low (FET on) indicates charging and open drain (FET off) indicates no Charging or Charge complete.
TS	Temperature sense terminal connected to DIO5840X -10k at 25°C NTC thermistor, in the battery pack. Floating terminal or pulling High puts part in TTDM “Charger” Mode and disable TS monitoring, Timers and Termination. Pulling terminal Low disables the IC. If NTC sensing is not needed, connect this terminal to VSS through an external 10 kΩ resistor. A 250 kΩ from TS to ground will prevent IC entering TTDM mode when battery with thermistor is removed.

© 2023 DIOO MICROCIRCUITS CO., LTD

BAT	Battery Connection. System Load may be connected. Expected range of bypass capacitors 1 μF to 10 μF.
BAT_V	BAT voltage connection. (Only for DIO5840D)
BAT_C	BAT current connection. System load may be connected. Expected range of bypass capacitors 1 μF to 10 μF. (Only for DIO5840D)
Exposed Pad	There is an internal electrical connection between the exposed thermal pad and the VSS terminal of the device. The thermal pad must be connected to the same potential as the VSS terminal on the printed circuit board. Do not use the thermal pad as the primary ground input for the device. VSS terminal must be connected to ground at all times.

© 2023 DIOO MICROCIRCUITS CO., LTD

Absolute Maximum Ratings

Stresses beyond those listed under the Absolute Maximum Rating table may cause permanent damage to the device. These are stress ratings only and functional operation of the device at these or any other condition beyond those indicated in the operational sections of the specifications is not implied. Exposure to absolute maximum rating conditions for extended periods may affect device reliability.

Parameter		Rating	Unit
Input voltage	IN (with respect to VSS)	-0.3 to 36	V
	BAT (with respect to VSS)	-0.3 to 7	
	PRE TERM, ISET, ISET2, TS, /CHG, /PG (with respect to VSS)	-0.3 to 7	
Input current	IN	1.25	A
Output current (Continuous)	BAT	1.25	A
Output sink current	/CHG	15	mA
Junction temperature		-40 to 150	°C
Storage temperature		-65 to 150	°C
Package thermal resistance	θ_{JA}	63.5	°C/W
ESD	Human-body model (HBM)	±6000	V

Recommend Operating Conditions

The Recommended Operating Conditions table defines the conditions for actual device operation. Recommended operating conditions are specified to ensure optimal performance to the datasheet specifications. DIOO does not recommend exceeding them or designing to absolute maximum ratings.

Symbol	Parameter	Min	Max	Unit
V_{IN}	IN voltage range	3.5	24	V
	IN operating voltage range, Restricted by V_{DPM} and V_{OVP}	4.45	6.3	V
I_{IN}	Input current, IN terminal		1	A
I_{BAT}	Current, BAT terminal		1	A
T_J	Junction temperature	0	125	°C
T_A	Operating temperature range	-40	85	°C
$R_{PRE\ TERM}$	Programs trickle charge and termination current thresholds	1	10	kΩ
R_{ISET}	Constant charge current programming resistor	0.5	20	kΩ
R_{TS}	10k NTC thermistor range without entering TTDM	1.66	500	kΩ

© 2023 DIOO MICROCIRCUITS CO., LTD

Electrical Characteristics

Over junction temperature range 0°C ≤ T_J ≤ 125°C and recommended supply voltage (unless otherwise noted).

Symbol	Parameter	Conditions	Min	Typ	Max	Unit
Input						
UVLO	Under voltage lock-out exit	V_{IN}: From low to high	3.05	3.2	3.35	V
V_{HYS_UVLO}	Hysteresis			180		mV
V_{IN_DT}	Input power good detection threshold is V_{BAT} + V_{IN_DT}	(Input power good if V_{IN} > V_{BAT} + V_{IN-DT}); V_{BAT} = 3.6 V, V_{IN}: 3.5 V → 4 V		120		mV
$V_{HYS-INDT}$	Hysteresis on V_{IN-DT} falling			80		mV
V_{OVP}	Input over-voltage protection threshold	V_{IN}: 5 V → 12 V	6.3	6.5	6.9	V
$V_{HYS-OVP}$	Hysteresis on OVP	V_{IN}: 12 V → 5 V		200		mV
V_{IN-DPM}	USB/Adaptor low input voltage protection. Restricts I_{BAT} at V_{IN_DPM}	Limit input source current to 50 mA; V_{BAT} = 3.5 V; R_{ISET} =2 KΩ		4.4		V
$I_{IN-USB-CL}$	USB input I-limit 100mA	ISET2 = Float; R_{ISET} = 1 KΩ	75	90	105	mA
	USB input I-limit 500mA	ISET2 = High; R_{ISET} =1 KΩ	400	445	490	
Battery short protection						
$V_{BAT(SC)}$	BAT terminal short-circuit detection threshold/trickle charge threshold	V_{BAT}: 3 V → 0.5 V, no deglitch	0.75	0.8	0.85	V
$V_{BAT(SC-HYS)}$	BAT terminal short hysteresis	Recovery ≥ $V_{BAT(SC)}$ + $V_{BAT(SC-HYS)}$; Rising, no deglitch		20		mV
$I_{BAT(SC)}$	Source current to BAT terminal during short-circuit detection			10		mA
Quiescent current						
$I_{BAT(PDWN)}$	Battery current into BAT terminal	V_{IN} = 0 V			1	μA
$I_{BAT(DONE)}$	BAT terminal current, charging terminated	V_{IN} = 6 V, V_{BAT} > $V_{BAT(REG)}$			1	
$I_{IN(STDBY)}$	Standby current into IN terminal	TS = low, V_{IN} ≤ 6 V			125	μA
I_{CC}	Active supply current, IN terminal	TS = open, V_{IN} = 6 V, T_{TDM} – no load on BAT terminal,		0.4	1	mA

© 2023 DIOO MICROCIRCUITS CO., LTD

		$V_{BAT} > V_{BAT(REG)}$, IC enabled				
Battery charger constant-charge						
$V_{BAT(REG)}$	Battery regulation voltage	V_{IN} = 5 V, ($V_{TS-45°C} \le V_{TS} \le V_{TS-0°C}$)	4.16	4.2	4.23	V
$V_{O_HT(REG)}$	Battery hot regulation voltage	V_{IN} = 5 V, ($V_{TS-50°C} \le V_{TS} \le V_{TS-45°C}$)		4.1		V
$I_{BAT_(RANGE)}$	Programmed output “constant charge” current	$V_{BAT(REG)} > V_{BAT} > V_{LOWV}$; V_{IN} = 5 V, ISET2 = low, R_{ISET} = 9 KΩ to 0.45 KΩ	50		1000	mA
$V_{DO(IN-BAT)}$	Drop-out, $V_{IN} – V_{BAT}$	Adjust V_{IN} down until I_{BAT} = 0.5 A, V_{BAT} = 4.15 V, R_{ISET} = 1 KΩ , ISET2 = low; $T_J \le 100°C$	325		500	mV
I_{BAT}	Output “constant current” formula	$V_{BAT(REG)} > V_{BAT} > V_{LOWV}$; V_{IN} = 5 V, ISET2 = low	$(1V/R_{ISET})*450$			A
Trickle current - set by PRE-TERM terminal						
V_{LOWV}	Trickle current to constant current charge transition threshold		2.4	2.5	2.6	V
$I_{Trickle}$	Trickle current, default setting	$V_{BAT} < V_{LOWV}$; R_{ISET} = 1 kΩ; $R_{PRE-TERM}$ = High Z	18	24	28	$\%I_{BAT-CC}$
	Trickle current, formula		$I_{BAT}*100u*R_{PRE-TERM} / 1$			mA
Termination – set by PRE-TERM terminal						
Terminal	Termination threshold current, default setting	$V_{BAT} > V_{RCH}$; R_{ISET} = 1 kΩ; $R_{PRE-TERM}$ = high Z	9	12	14	$\%I_{BAT-CC}$
	Termination current threshold formula		$(I_{BAT}*50u*R_{PRE-TERM} / 1)+10$			mA
$I_{PRE-TERM}$	Current for programming the term. and trickle with resistor. $I_{Term-Start}$ is the initial PRE-TERM current.	$R_{PRE-TERM}$ = 2 kΩ, V_{BAT} = 4.15 V	45	50	55	µA
Recharge or refresh						
V_{RCH}	Recharge detection threshold – normal temp	V_{IN} = 5 V, V_{TS} = 0.5 V, V_{BAT}: 4.25 V → V_{RCH}	$V_{O(REG)}$ -0.2	$V_{O(REG)}$ -0.15	$V_{O(REG)}$ -0.1	V
	Recharge detection threshold – hot temp	V_{IN} = 5 V, 45°C < Temp < 50°C,	$V_{O_HT(REG)}$ -0.2	$V_{O_HT(REG)}$ -0.15	$V_{O_HT(REG)}$ -0.1	V

© 2023 DIOO MICROCIRCUITS CO., LTD

		V_{BAT}: 4.15 V → V_{RCH}				
Battery-pack NTC monitor, TS terminal						
$I_{NTC-10k}$	NTC bias current	V_{TS} = 0.3 V	48	50	52	µA
$V_{TTDM(TS)}$	Termination and timer disable mode threshold – enter	V_{TS}: 1.5 V → 4 V; timer held in reset	3.6	3.7	3.8	V
$V_{HYS-TTDM(TS)}$	Hysteresis			100		mV
$V_{CLAMP(TS)}$	TS maximum voltage clamp	V_{TS} = open (float)		V_{IN}		V
$V_{TS-0°C}$	Low temperature CHG pending	Low temp charging to pending; V_{TS}: 1 V → 1.5 V	1.384			V
$V_{HYS-0°C}$	Hysteresis at 0°C	Charge pending to low temp charging; V_{TS}: 1.5 V → 1 V		60		mV
$V_{TS-10°C}$	Low temperature, half charge	Normal charging to low temp charging; V_{TS}: 0.5 V → 1 V		920		mV
$V_{HYS-10°C}$	Hysteresis at 10°C	Low temp charging to normal CHG; V_{TS}: 1 V → 0.5 V		20		mV
$V_{TS-45°C}$	High temperature at 4.1 V	Normal charging to high temp CHG; V_{TS}: 0.5 V → 0.2 V			246.8	mV
$V_{HYS-45°C}$	Hysteresis at 45°C	High temp charging to normal CHG; V_{TS}: 0.2 V → 0.5 V		10		mV
$V_{TS-50°C}$	High temperature disable	High temp charge to pending; V_{TS}: 0.2 V → 0.1 V			209	mV
$V_{HYS-50°C}$	Hysteresis at 50°C	Charge pending to high temp CHG; V_{TS}: 0.1 V → 0.2 V		10		mV
$V_{TS-EN-10k}$	Charge enable threshold, (10k NTC)	V_{TS}: 0 V → 0.175 V;		100		mV
$V_{TS-DIS_HYS-10k}$	HYS below $V_{TS-EN-10k}$ to disable, (10k NTC)	V_{TS}: 0.125 V → 0 V;		12		mV
Thermal regulation						
$T_{J(REG)}$	Temperature regulation limit			125		°C
$T_{J(OFF)}$	Thermal shutdown temperature			155		°C
$T_{J(OFF-HYS)}$	Thermal shutdown hysteresis			20		°C
Logic levels ON ISET2						
V_{IL}	Logic LOW input voltage	Sink 0.5 µA			0.5	V

© 2023 DIOO MICROCIRCUITS CO., LTD

V_{IH}	Logic HIGH input voltage	Source 0.9 µA	2.5			V
I_{IL}	Sink current required for LO	V_{ISET2} = 0.5 V		0.5		µA
I_{IH}	Source current required for HI	V_{ISET2} = 2.5 V		0.9		µA
V_{FLT}	ISET2 float voltage		1.1	1.5	1.9	V
Logic levels ON /CHG AND /PG						
V_{OL}	Output LOW voltage	I_{SINK} = 5 mA			0.4	V
I_{LEAK}	Leakage current into IC	$V_{/CHG}$ = 5 V, $V_{/PG}$ = 5 V			1	µA
Input						
$t_{DGL(PG_PWR)}$	Deglitch time on exiting sleep	Time measured from V_{IN}: 0 V → 5 V 1 µs rise-time to /PG = Low, V_{BAT} = 3.6 V		1.8		ms
$t_{DGL(OVP-SET)}$	Input over-voltage blanking time	V_{IN}: 5 V → 12 V		5		µs
$t_{DGL(OVP-REC)}$	Deglitch time exiting OVP	Time measured from V_{IN}: 12 V → 5 V 1 µs fall-time to /PG = Low		100		µs
Trickle charge - set by PRE-TERM pin						
$t_{DGL1(LOWV)}$	Deglitch time on trickle current to constant current transition			70		µs
$t_{DGL2(LOWV)}$	Deglitch time on constant current to trickle current transition			32		ms
$t_{DGL(TERM)}$	Deglitch time, termination detected			30		
Recharge or refresh						
$t_{DGL1(RCH)}$	Deglitch time, recharge threshold detected	V_{IN} = 5 V, V_{TS} = 0.5 V, V_{BAT}: 4.25 V → 3.5 V in 1 µs; $t_{DGL(RCH)}$ is time to ISET ramp		29		ms
$t_{DGL2(RCH)}$	Deglitch time, recharge threshold detected in BAT-detect mode	V_{IN} = 5 V, V_{TS} = 0.5 V, V_{BAT} = 3.5 V inserted; $t_{DGL(RCH)}$ is time to ISET ramp		150		µs
Battery charging timers and fault timers						
$T_{TRICKLE-CHG}$	Trickle safety timer value	Restarts when entering trickle charge; Always enabled when in trickle charge.	1700	1940	2250	s
t_{MAXCH}	Charge safety timer value	Clears fault or resets at UVLO, TS disable, BAT	34000	38800	45000	s

© 2023 DIOO MICROCIRCUITS CO., LTD

		short, exiting LOWV and refresh				
Battery-pack NTC monitor; TS terminal						
$t_{DGL(TTDM)}$	Deglitch exit TTDM between states			57		ms
	Deglitch enter TTDM between states			400		μs
$t_{DGL(TS_10°C)}$	Deglitch for TS thresholds: 10°C	Normal to cold operation; V_{TS}: 0.6 V → 1 V		50		ms
		Cold to normal operation; V_{TS}: 1 V → 0.6 V		20		ms
$t_{DGL(TS)}$	Deglitch for TS thresholds: 0/45/50°C	Battery charging		30		ms

Note:

(1) Specifications subject to change without notice.

© 2023 DIOO MICROCIRCUITS CO., LTD

Detailed Description

Overview

The DIO5840X is an integrated 1 A linear charger for 1-cell Li-Ion, Li-Polymer, targeted at space-limited portable applications. The device is powered by a USB port or AC adapter. High input voltage range with input overvoltage protection. The charger is designed for a single power path from the input to the output to charge a single cell Li-Ion or Li-Pol battery pack. Upon application of a 5V DC power source, the ISET and BAT short checks are performed to assure a proper charge cycle.

The charger has three phases of charging: shifting the charging mode between the regulation, constant current charging and constant voltage charging mode. The charger also comes with a full set of safety features: JEITA temperature standard, over-voltage protection, and safety timers. All of these features and more are described in detail below.

If the battery voltage is below the LOWV threshold, the battery is considered discharged and a preconditioning cycle begins. The amount of trickle current can be programmed using the PRE-TERM terminal which programs a percent of constant charge current (5 to 40%) as the trickle current. This feature is useful when the system load is connected across the battery “stealing” the battery current. The trickle current can be set higher to account for the system loading while allowing the battery to be properly conditioned. The PRE-TERM terminal is a dual function terminal which sets the trickle current level and the termination threshold level. The termination "current threshold" is always half of the trickle programmed current level.

Once the battery voltage has charged to the V_{LOWV} threshold, constant current charge is applied. The constant current is programmed using the ISET terminal. The constant current provides the bulk of the charge. Power dissipation in the IC is greatest in constant charge with a lower battery voltage. If the IC reaches 125°C the IC enters thermal regulation, slows the timer clock by half and reduces the charge current as needed to keep the temperature from rising any further.

Once the cell has charged to the regulation voltage the voltage loop takes control and holds the battery at the regulation voltage until the current tapers to the termination threshold. The termination can be disabled if desired. The /CHG terminal is low during the charge cycle only and turns off once the termination threshold is reached, regardless if termination, for charge current, is enabled or disabled.

Power-down or under voltage lockout (UVLO)

An internal under-voltage lockout circuit monitors the input voltage and keeps the charger in shutdown mode until VCC rises above the under-voltage lockout threshold. The UVLO circuit has a built-in hysteresis of 180 mV. The DIO5840X is in power down mode if the IN terminal voltage is less than UVLO. The part is considered “dead” and all the terminals are high impedance.

Overvoltage-protection (OVP) – continuously monitored

Additionally, an overvoltage protection (OVP) circuit is implemented that shuts off the internal LDO and discontinues charging when $V_{IN} > V_{OVP}$ for a period long than $t_{DGL(OVP)}$. Once the OVP condition is removed, a new power on sequence starts. The safety timers are reset and a new charge cycle will be indicated by the /CHG output.

© 2023 DIOO MICROCIRCUITS CO., LTD

Power-up

When the input voltage at IN is within the valid range: V_{IN} > UVLO, and all internal timers and other circuit blocks are reset. The device then checks for short-circuits at the ISET pin. If no short conditions exists, the device starts charging properly. Users can set the input current limit threshold base on the ISET2 terminal, start the safety timer and enable the /CHG terminal.

Sleep mode

If the IN terminal voltage is between than V_{BAT} + V_{DT} and UVLO, the charge current is disabled, the safety timer counting stops (not reset) and the /PG and /CHG terminals are high impedance. As the input voltage rises and the charger exits sleep mode, the /PG terminal goes low, the safety timer continues to count, charge is enabled and the /CHG terminal returns to its previous state.

Power good indication (/PG)

PG pin is an internal open drain FET output that becomes highly resistant when UVLO or OVP occurs in VIN and TS is disabled. The rest are low-resistivity output path to ground.

/CHG terminal indication

The charge terminal has an internal open-drain FET which is on (pulls down to VSS) during the charge only (independent of TTDM) and is turned off once the battery reaches voltage regulation and the charge current tapers to the termination threshold set by the PRE-TERM resistor. The charge terminal is high impedance in sleep mode.

Cycling input power, pulling the TS terminal low and releasing or entering trickle-charge mode causes the /CHG terminal to go reset (go low if power is good and a discharged battery is attached) and is considered the start of charge.

/CHG and /PG LED pull-up source

For host monitoring, a pull-up resistor is used between the "STATUS" terminal and the VCC of the host and for a visual indication a resistor in series with an LED is connected between the "STATUS" terminal and a power source. The /CHG or /PG source is capable of exceeding 8 V. If the source is the BAT terminal, note that as the battery changes voltage, and the brightness of the LEDs vary.

Charging state	/CHG FET/LED
Charge after VIN applied	ON
Refresh charge	
OVP	OFF
SLEEP	

V_{IN} power good state	/PG FET/LED
UVLO	OFF
SLEEP mode	
OVP mode	
TS_disable	
Normal input (V_{BAT} + V_{DT} < V_{IN} < V_{OUP})	ON

© 2023 DIOO MICROCIRCUITS CO., LTD

New charge cycle

A new charge cycle is started when a good power source is applied, performing a chip disable/enable (TS terminal), exiting termination and Timer Disable Mode (TTDM), detecting a battery insertion or the BAT voltage drop terminal goes below the V_{RCH} threshold. The /CHG terminal is active low only during the charge cycle.

IN-DPM (VIN-DPM or IN-DPM)

The IN-DPM feature is used to detect an input source voltage that is folding back (voltage drop terminal), reaching its current limit due to excessive load. When the input voltage drops to the V_{IN-DPM} threshold the internal pass FET starts to reduce the current until there is no further drop in voltage at the input. This would prevent a source with voltage less than V_{IN-DPM} to power the BAT terminal. This works well with current limited adaptors and USB ports as long as the nominal voltage is 4.4 V. This is an added safety feature that helps protect the source from excessive loads.

BAT

The Charger's BAT terminal provides current to the battery and to the system, if present. This IC can be used to charge the battery plus power the system, charge just the battery or just power the system (TTDM) assuming the loads do not exceed the available current. The BAT terminal is a current limited source and is inherently protected against shorts. If the system load ever exceeds the output programmed current threshold, the output will be discharged unless there is sufficient capacitance or a charged battery present to supplement the excessive load.

ISET

An external resistor is used to program the output current (50 to 1000 mA) and can be used as a current monitor.

$$I_{BAT} = (1V / R_{ISET})*450 \quad (1)$$

Where:

• I_{BAT} is the desired constant charge current;

ISET2

ISET2 is a 3-state input and programs the input current limit /regulation threshold. A low will program a regulated constant charge current via the ISET resistor and is the maximum allowed input/output current for any ISET2 setting, FLOAT will program a 100 mA current limit and High will program a 500 mA current limit.

PRE_TERM – Trickle-charge and termination programmable threshold

Pre-Term is used to program both the trickle-charge current and the termination current threshold. The trickle-charge current level is a factor of two higher than the termination current level. The termination can be set between 5 and 50% of the programmed output current level set by ISET. If left floating, the termination and trickle are set internally at 10/20% respectively. The trickle-charge-to-constant-charge, V_{LOWV} threshold is set to 2.5 V.

$$I_{Trickle} = (100\ uA*R_{PRE_TERM}/1)*I_{BAT} \quad (2)$$

$$I_{TERM} = (50\ uA*R_{PRE_TERM}/1)*I_{BAT} + 10\ mA \quad (3)$$

© 2023 DIOO MICROCIRCUITS CO., LTD

Where:

• I_{TERM} is the termination current;

• $I_{Trickle}$ is the trickle current;

• R_{PRE_TERM} is trickle & terminal resistor.

TS

The TS function is designed to follow the new JEITA temperature standard for Li-Ion and Li-Pol batteries. There are now four thresholds: 50°C, 45°C, 10°C, and 0°C.

For the DIO5840A: Normal operation occurs between 10°C and 45°C. If between 0°C and 10°C the charge current level is 0.2*I_{BAT} and if between 45°C and 50°C the regulation voltage is reduced to V_{BAT} - 0.1 V and the charge current level is cut in half. If less than 0°C or more than 50°C, the charging is disable.

For the DIO5840B, D: Normal operation occurs between 10°C and 45°C. If between 0°C and 10°C the charge current level is 0.2*I_{BAT} and if less than 0°C or more than 45°C, the charging is disable.

The TS feature is implemented using an internal 50 μA current source to bias the thermistor designed for use with a 10k NTC connected from the TS terminal to VSS. If this feature is not needed, a fixed 10 kΩ can be placed between TS and VSS to allow normal operation. This may be done if the host is monitoring the thermistor and then the host would determine when to pull the TS terminal low to disable charge.

The TS terminal has two additional features, when the TS terminal is pulled low or floated/driven high. A low disables charge and a high puts the charger in TTDM.

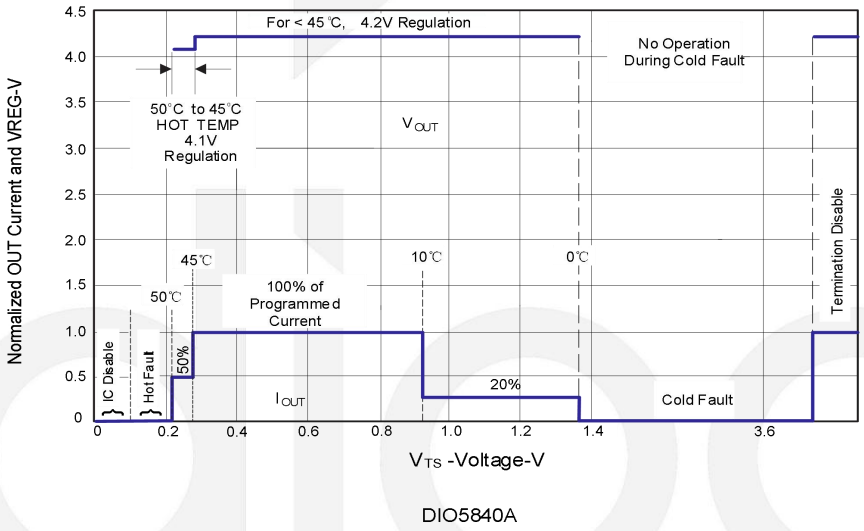

DIO5840A

© 2023 DIOO MICROCIRCUITS CO., LTD

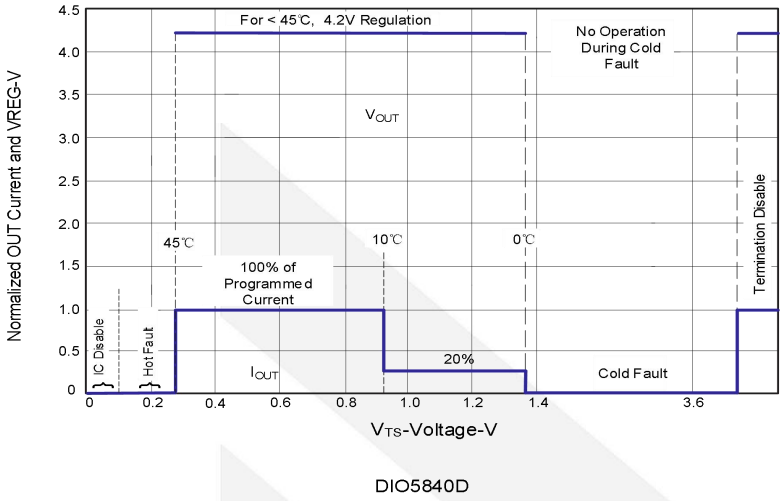

Figure 2. Operation over TS bias voltage

Termination and Timer Disable Mode (TTDM) - TS terminal high

The battery charger is in TTDM when the TS terminal goes high from removing the thermistor (removing battery pack/ floating the TS terminal) or by pulling the TS terminal up to the TTDM threshold. When entering TTDM, the 10 hour safety timer is held in reset and termination is disabled. The charging profile does not change (still has trickle-charge, constant current charge and constant voltage modes). This implies the battery is still charged safely and the current is allowed to taper to zero.

Termination

Once the BAT terminal goes above V_{RCH}, (reaches voltage regulation) and the current tapers down to the termination threshold, the /CHG terminal goes high impedance. If the battery is present, the charge current will terminate. If the battery was removed along with the thermistor, then the TS terminal is driven high and the charge enters TTDM.

Refresh threshold

After termination, if the BAT terminal voltage drops to V_{RCH} (150 mV below regulation) then a new charge is initiated, but the /CHG terminal remains at a high impedance (off).

Timers

The trickle-charge timer is set to 30 minutes. The trickle-charge current, can be programmed to off-set any system load, making sure that the 30 minutes is adequate.

The constant charge timer is fixed at 10 hours and can be increased real time by going into thermal regulation, IN- DPM or if in USB current limit. The timer clock slows by a factor of 2, resulting in a clock than counts half as fast when in these modes. If either the 30 minute or ten hour timer times out, the charging is terminated and the /CHG terminal goes high impedance if not already in that state. The timer is reset by disabling the IC, cycling power or going into and out of TTDM.

© 2023 DIOO MICROCIRCUITS CO., LTD

Typical Applications

$I_{BAT_CONSTANT_CHG}$ = 500 mA; $I_{BAT_TRICKLE_CHG}$ = 100 mA; I_{BAT_TERM} = 50 mA

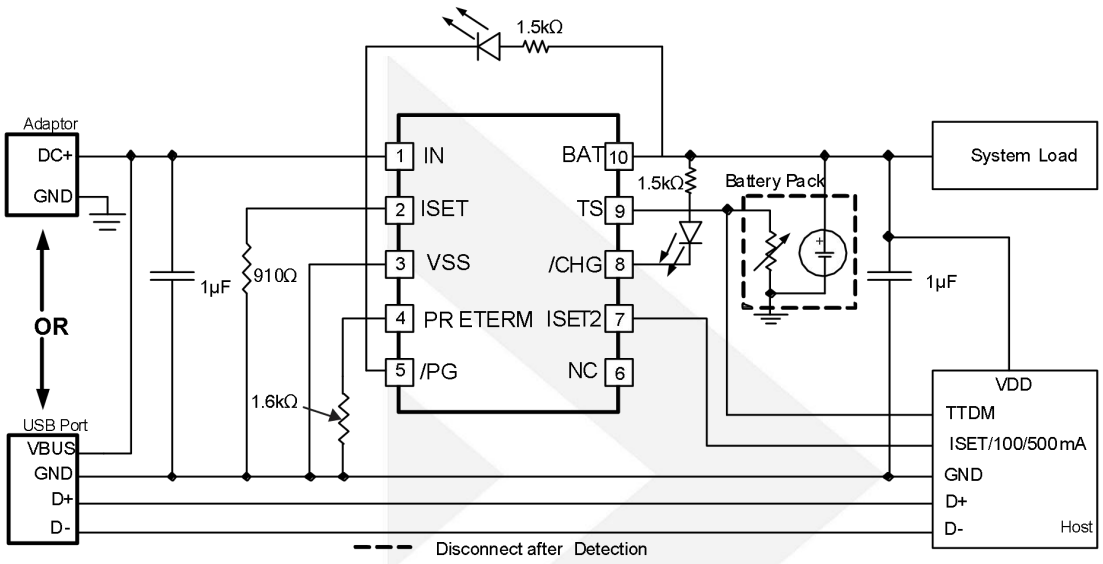

Figure 3. Typical applications for DIO5840A/B

Design requirements

• Supply voltage = 5 V

• Constant charge current: I_{BAT} = 500 mA; I_{SET} ≈ 910 Ω

• Termination current threshold: I_{TERM} = 50 mA; $R_{PRE\text{-}TERM}$ = 1.6 KΩ

• Trickle-charge current by default is twice the termination current or ~100 mA

• TS – Battery temperature sense = 10k NTC (β = 3435)

• Program the constant charge current, ISET :

$$R_{ISET} = [450*1V / I_{BAT}] \quad (4)$$

• Program the termination current threshold, ITERM :

$$R_{PRE_TERM} = (I_{Trickle} / I_{BAT}) *(1V/100uA) \quad (5)$$

$$R_{PRE_TERM} = (I_{TERM}\text{-}10mA) / (I_{BAT} *50uA) \quad (6)$$

TS Function

Use a 10k NTC thermistor in the battery pack.

To disable the temperature sense function, use a fixed 10k resistor between the TS (terminal 1) and Vss.

/CHG and /PG

LED Status: connect a 1.5K resistor in series with a LED between the BAT terminal and the /CHG terminal. Connect a 1.5K resistor in series with a LED between the BAT terminal and the /PG terminal.

Processor monitoring: Connect a pull-up resistor between the processor's power rail and the /CHG terminal. Connect a pull-up resistor between the processor's power rail and the /PG terminal.

© 2023 DIOO MICROCIRCUITS CO., LTD

Selecting in and BAT terminal capacitors

In most applications, all that is needed is a high-frequency decoupling capacitor (ceramic) on the power terminal, input and output terminals. Using the values shown on the application diagram is recommended. After evaluation of these voltage signals with real system operational conditions, one can determine if capacitance values can be adjusted toward the minimum recommended values (DC load application) or higher values for fast high amplitude pulsed load applications. Note if designed for high input voltage sources (bad adaptors or wrong adaptors), the capacitor needs to be rated appropriately. Ceramic capacitors are tested to 2x their rated values so a 16 V capacitor may be adequate for a 30 V transient (verify tested rating with capacitor manufacturer).

Thermal Package

The DIO5840X family is packaged in a thermally enhanced DFN2*2-10 package. The package includes a thermal pad to provide an effective thermal contact between the IC and the printed circuit board (PCB). The power pad should be directly connected to the VSS terminal. The most common measure of package thermal performance is thermal impedance (θ_{JA}) measured (or modeled) from the chip junction to the air surrounding the package surface (ambient). The mathematical expression for θ_{JA} is:

$$\theta_{JA} = (T_J - T) / P \quad (7)$$

Where:

• T_J = chip junction temperature

• T = ambient temperature

• P = device power dissipation

Factors that can influence the measurement and calculation of θ_{JA} include:

1. Whether or not the device is board mounted
2. Trace size, composition, thickness, and geometry
3. Orientation of the device (horizontal or vertical)
4. Volume of the ambient air surrounding the device under test and airflow
5. Whether other surfaces are in close proximity to the device being tested

Due to the charge profile of Li-Ion and Li-Pol batteries the maximum power dissipation is typically seen at the beginning of the charge cycle when the battery voltage is at its lowest. Typically after constant charge begins the pack voltage increases to ≈3.4 V within the first 2 minutes. The thermal time constant of the assembly typically takes a few minutes to heat up so when doing maximum power dissipation calculations, 3.4 V is a good minimum voltage to use. This is verified, with the system and a fully discharged battery, by plotting temperature on the bottom of the PCB under the IC (pad should have multiple vias), the charge current and the battery voltage as a function of time. The constant charge current will start to taper off if the part goes into thermal regulation.

© 2023 DIOO MICROCIRCUITS CO., LTD

Layout

To obtain optimal performance, the decoupling capacitor from IN to VSS (thermal pad) and the output filter capacitors from BAT to VSS (thermal pad) should be placed as close as possible to the DIO5840X, with short trace runs to both IN, BAT and VSS (thermal pad).

All low-current VSS connections should be kept separate from the high-current charge or discharge paths from the battery. Use a single-point ground technique incorporating both the small signal ground path and the power ground path.

The high current charge paths into IN terminal and from the BAT terminal must be sized appropriately for the maximum charge current in order to avoid voltage drops in these traces.

The DIO5840X family is packaged in a thermally enhanced DFN2*2-10 package. The package includes a thermal pad to provide an effective thermal contact between the IC and the printed circuit board (PCB); this thermal pad is also the main ground connection for the device. Connect the thermal pad to the PCB ground connection. It is best to use multiple 10 mil vias in the power pad of the IC and close enough to conduct the heat to the bottom ground plane. The bottom ground place should avoid traces that “cut off” the thermal path. The thinner the PCB the less temperature rise.

© 2023 DIOO MICROCIRCUITS CO., LTD

Typical Performance Characteristics

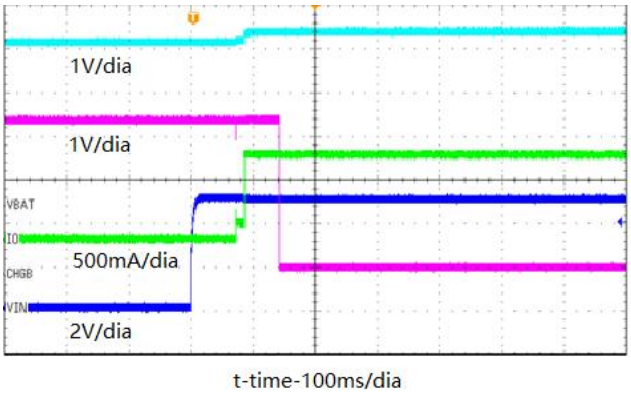

Figure 4. Power up

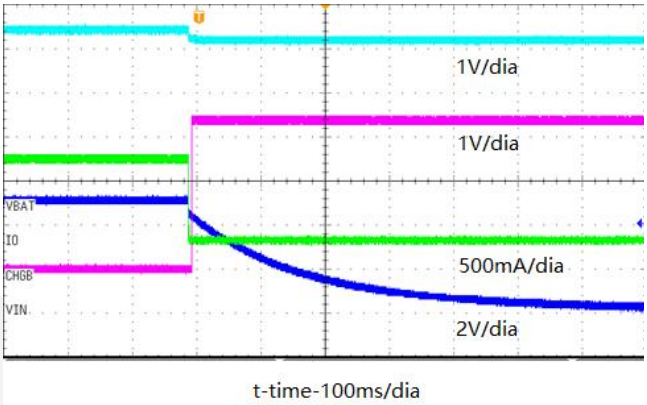

Figure 5. Power down

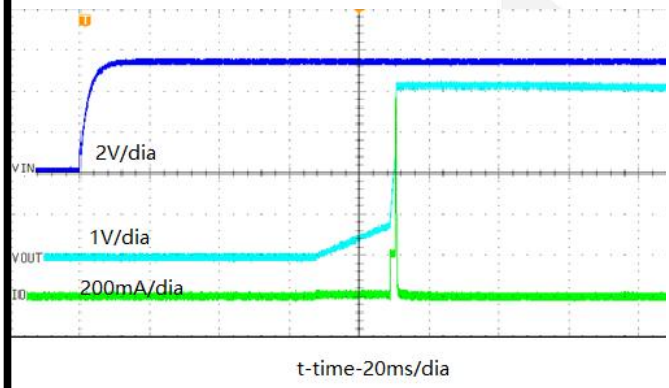

Figure 6. AC charging

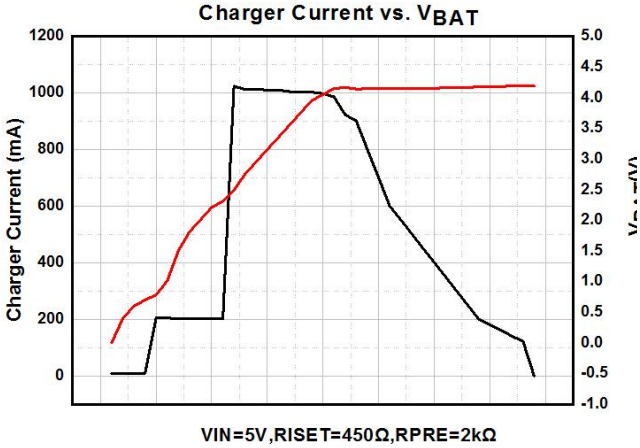

Figure 7. Charger current vs. V_{BAT}

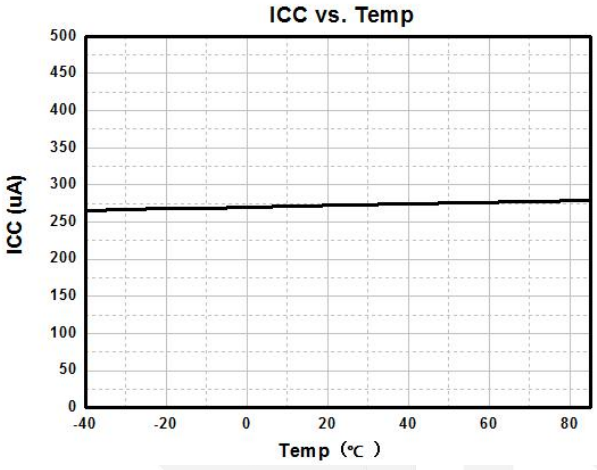

V_{IN} = 5 V, ISET = 1 kΩ, ISET2 = L, V_{BAT} > $V_{BAT(REG)}$

Figure 8. I_{CC} vs. Temp

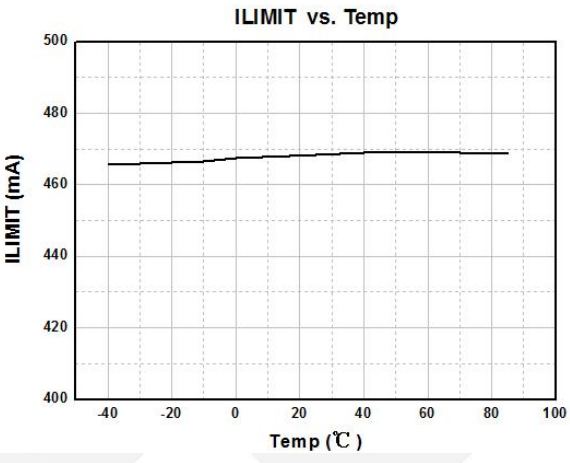

V_{IN} = 5 V, ISET = 1 kΩ, ISET2 = L, V_{BAT} = 3.6 V

Figure 9. I_{LIMIT} vs. Temp

© 2023 DIOO MICROCIRCUITS CO., LTD

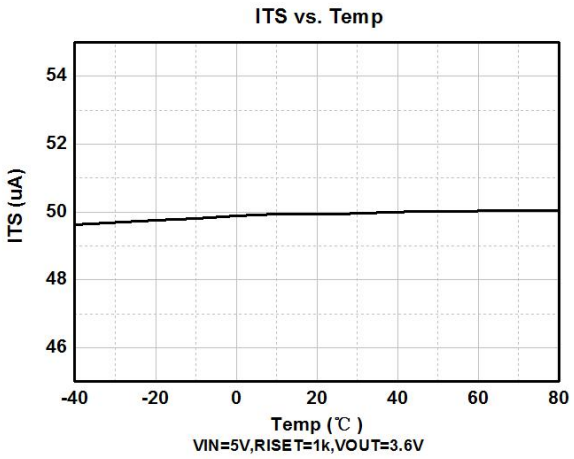

V_{IN} = 5 V, ISET = 1 kΩ, V_{OUT} = 3.6 V

Figure 10. I_{TS} vs. Temp

© 2023 DIOO MICROCIRCUITS CO., LTD

Physical Dimensions: DFN2*2-10

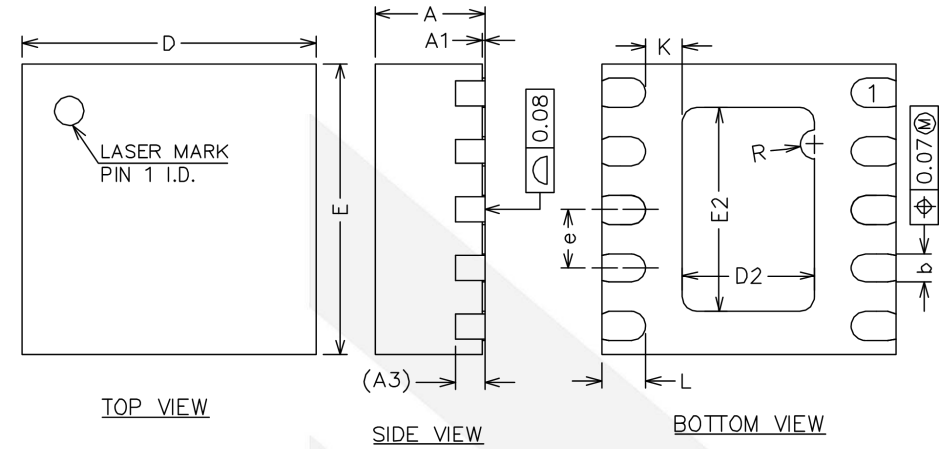

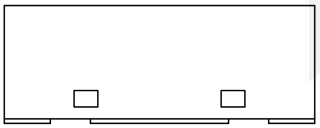

COMMON DIMENSIONS (Units of measure = Millimeter)			
Symbol	**MIN**	**NOM**	**MAX**
A	0.70	0.75	0.80
A1	0.00	0.02	0.05
A3		0.20 REF	
b	0.15	0.20	0.25
D	1.90	2.00	2.10
E	1.90	2.00	2.10
D2	0.80	0.90	1.00
E2	1.30	1.40	1.50
e	0.30	0.40	0.50
K	0.15	0.25	0.35
L	0.25	0.30	0.35
R		0.10 REF	

© 2023 DIOO MICROCIRCUITS CO., LTD

1A, Single-Input, Single Cell Li-Ion and Li-Pol Battery Charger With Auto Start

CONTACT US

Dioo is a professional design and sales corporation for high-quality and performance analog semiconductors. The company focuses on industry markets, such as cell phones, handheld products, laptops, medical equipment, and so on. Dioo's product families include analog signal processing and amplifying, LED drivers, and charger ICs. Go to http://www.dioo.com for a complete list of Dioo product families.

For additional product information or full datasheet, please contact our sales department or representatives.

© 2023 DIOO MICROCIRCUITS CO., LTD