DIO7291

Ultra-Small, Low-Input Voltage, Low R_{ON} Load Switch

Features

- Low-Input Voltage: 1.2 V to 5.5 V
- Ultra-Low ON-State Resistance
  - R_{ON} = 46 mΩ at V_{IN} = 5.0 V
  - R_{ON} = 49 mΩ at V_{IN} = 4.2 V
  - R_{ON} = 52 mΩ at V_{IN} = 3.6 V
  - R_{ON} = 63 mΩ at V_{IN} = 2.5 V
  - R_{ON} = 81 mΩ at V_{IN} = 1.8 V
  - R_{ON} = 155 mΩ at V_{IN} = 1.2 V
- DC Current Up to 1.5 A
- Ultra-Low Quiescent Current: 57 nA at 1.8V
- Low Control Input Thresholds Enable Use of 1.2V/1.8V/3.6V/4.2V/5.0V Logic
- Controlled Slew Rate to Avoid Inrush Current
- Package: WLCSP-4 (0.4mm Pitch)

Descriptions

DIO7291 device is low R_{ON} MOSEFT controlled by external logic pin, allowing optimization of battery life, and portable device autonomy. It includes a P-channel MOSFET that operates over an input voltage range of 1.2 V to 5.5 V. An on/off input (ON) controls the switch that can interface with low voltage control signals. The DIO7291 is packaged in WLCSP-4 with 0.4 mm pitch. It is characterized for operation over the free-air temperature range of -40°C to 85°C.

Applications

- Cellular Phones
- GPS Devices
- Digital Cameras
- Peripheral Ports
- Portable Instrumentation
- RF Modules
- Personal Digital Assistants (PDAs)
- MP3 Players

Typical Applications

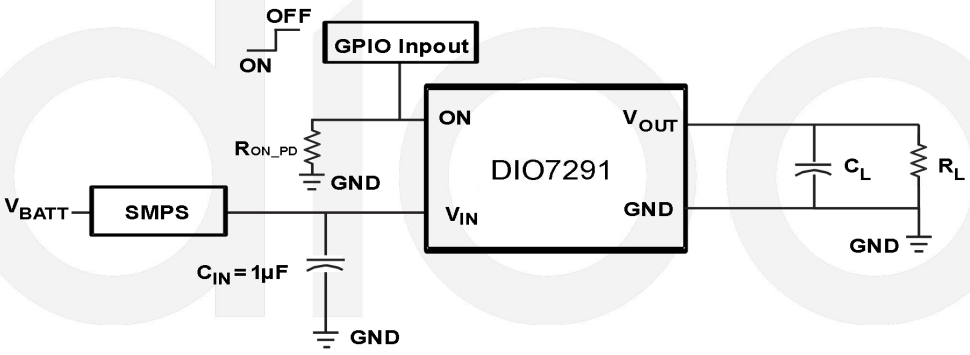

© 2023 DIOO MICROCIRCUITS CO., LTD

Ordering Information

Order Part Number	Top Marking		T_A	Package	
DIO7291WL4	YWC	Green	-40 to 85°C	WLCSP-4	Tape & Reel, 3000

Pin Assignment

WLCSP-4

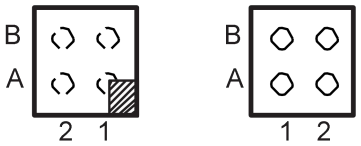

Figure 1. Top View & Bottom View

Pin Descriptions

Name	NO.	Description
V_{OUT}	A1	Switch output
V_{IN}	A2	Switch input, bypass this input with a ceramic capacitor to ground
GND	B1	Ground
ON	B2	Switch control input, active low

© 2023 DIOO MICROCIRCUITS CO., LTD

Absolute Maximum Ratings

Stresses beyond those listed under “Absolute Maximum Rating” may cause permanent damage to the device. These are stress ratings only and functional operation of the device at these or any other condition beyond those indicated in the operational sections of the specifications is not implied. Exposure to absolute maximum rating conditions for extended periods may affect device reliability. DIOO does not Recommend exceeding them or designing to Absolute Maximum Ratings.

Symbol	Parameter	Rating	Unit
V_{IN}	Input voltage	-0.3 to 6	V
V_{OUT}	Output voltage	V_{IN}+0.3	V
V_{ON}	Input voltage	-0.3 to 6	V
P_D	Power dissipation at T_A = 25°C	0.48	W
I_{MAX}	Maximum continuous switch current	2	A
T_A	Operating free air temperature range	-40 to 85	°C
T_{lead}	Maximum lead temperature (10 s soldering time)	300	°C
T_{stg}	Storage temperature	-45 to 145	°C
θ_{JA}	Thermal Resistance	189.1	°C/W
ESD	HBM: All Pins	±4000	V
	CDM	±2000	
	MM	±200	
Latch up		±400	mA

Recommend Operating Conditions

The Recommended Operating Conditions table defines the conditions for actual device operation. Recommended Operating conditions are specified to ensure optimal performance to the datasheet specifications.

Symbol	Parameter	Rating	Unit
V_{IN}	Input voltage range	1.2 to 5.5	V
V_{OUT}	Output voltage range	V_{IN}	V
C_{IN}	Input capacitor	1	μF

© 2023 DIOO MICROCIRCUITS CO., LTD

Electrical Characteristics

V_{IN} = 1.2 V to 5.5 V, T_A = -40°C to 85°C, unless otherwise specified.

Symbol	Parameter	Conditions		T_A	Min.	Typ	Max	Unit
I_{IN}	Quiescent current	I_{OUT} = 0, V_{ON} = GND	V_{IN} = 1.2V	25°C		25		nA
				Full			50	
			V_{IN} = 1.8V	25°C		57		
				Full			100	
			V_{IN} = 3.6V	25°C		158		
				Full			200	
			V_{IN} = 4.2V	25°C		191		
				Full			250	
			V_{IN} = 5.0V	25°C		235		
				Full			300	
$I_{IN(OFF)}$	OFF-state supply current	V_{ON} = V_{CC}, OUT = Open	V_{IN} = 1.2V	25°C		17		nA
				Full			50	
			V_{IN} = 1.8V	25°C		34		
				Full			100	
			V_{IN} = 3.6V	25°C		80		
				Full			200	
			V_{IN} = 4.2V	25°C		97		
				Full			250	
			V_{IN} = 5.0V	25°C		120		
				Full			300	
$I_{IN(LEAKAGE)}$	OFF-state switch current	V_{ON} = V_{CC}, V_{OUT} = 0	V_{IN} = 1.2V	25°C		17		nA
				Full			50	
			V_{IN} = 1.8V	25°C		31		
				Full			100	
			V_{IN} = 3.6V	25°C		80		
				Full			200	
			V_{IN} = 4.2V	25°C		97		
				Full			250	
			V_{IN} = 5.0V	25°C		120		
				Full			300	
R_{ON}	ON-state resistance	I_{OUT} = -200mA	V_{IN} = 5.0V	25°C		46		mΩ
				Full			55	
			V_{IN} = 4.2V	25°C		49		
				Full			58	
			V_{IN} = 3.6V	25°C		52		
				Full			62	
			V_{IN} = 2.5V	25°C		63		
				Full			74	

© 2023 DIOO MICROCIRCUITS CO., LTD

			V_{IN} = 1.8V	25°C		81		
				Full			95	
			V_{IN} = 1.2V	25°C		155		
				Full			166	
R_{ON_PD}	ON pull down resistance	V_{ON} = 1.2V to 3.6V or GND				8.5		MΩ
V_{IH}	High level input voltage, ON	V_{IN} = 1.2V to 5.5V			1.0			V
V_{IL}	Low level input voltage, ON	V_{IN} = 1.2V to 5.5V					0.5	V

Specifications subject to change without notice.

Switching Characteristics

T_A = 25°C, unless otherwise specified.

Symbol	Parameter	Conditions		Min.	Typ.	Max.	Unit
V_{IN} = 1.2 V							
t_{ON}	Turn on time	R_L = 100 Ω	C_L = 0.1 μF		640		μs
			C_L = 1 μF		688		
			C_L = 3.3 μF		690		
t_{OFF}	Turnoff time	R_L = 100 Ω	C_L = 0.1 μF		8		μs
			C_L = 1 μF		34		
			C_L = 3.3 μF		240		
t_r	V_{OUT} rise time	R_L = 100 Ω	C_L = 0.1 μF		440		μs
			C_L = 1 μF		480		
			C_L = 3.3 μF		488		
t_f	V_{OUT} fall time	R_L = 100 Ω	C_L = 0.1 μF		22		μs
			C_L = 1 μF		112		
			C_L = 3.3 μF		770		
V_{IN} = 1.8 V							
t_{ON}	Turn on time	R_L = 100 Ω	C_L = 0.1 μF		376		μs
			C_L = 1 μF		396		
			C_L = 3.3 μF		412		
t_{OFF}	Turnoff time	R_L = 100 Ω	C_L = 0.1 μF		7		μs
			C_L = 1 μF		32		
			C_L = 3.3 μF		228		
t_r	V_{OUT} rise time	R_L = 100 Ω	C_L = 0.1 μF		288		μs
			C_L = 1 μF		288		

© 2023 DIOO MICROCIRCUITS CO., LTD

			C_L = 3.3 μF		296		
t_f	V_{OUT} fall time	R_L = 100Ω	C_L = 0.1 μF		23		μs
			C_L = 1 μF		126		
			C_L = 3.3 μF		800		
V_{IN} = 2.5 V							
t_{ON}	Turn on time	R_L = 100Ω	C_L = 0.1 μF		376		μs
			C_L = 1 μF		396		
			C_L = 3.3 μF		400		
t_{OFF}	Turnoff time	R_L = 100Ω	C_L = 0.1 μF		7		μs
			C_L = 1 μF		32		
			C_L = 3.3 μF		228		
t_r	V_{OUT} rise time	R_L = 100Ω	C_L = 0.1 μF		288		μs
			C_L = 1 μF		288		
			C_L = 3.3 μF		288		
t_f	V_{OUT} fall time	R_L = 100Ω	C_L = 0.1 μF		23		μs
			C_L = 1 μF		128		
			C_L = 3.3 μF		790		
V_{IN} = 3.0 V							
t_{ON}	Turn on time	R_L = 100Ω	C_L = 0.1 μF		228		μs
			C_L = 1 μF		248		
			C_L = 3.3 μF		252		
t_{OFF}	Turnoff time	R_L = 100Ω	C_L = 0.1 μF		7		μs
			C_L = 1 μF		32		
			C_L = 3.3 μF		224		
t_r	V_{OUT} rise time	R_L = 100Ω	C_L = 0.1 μF		220		μs
			C_L = 1 μF		226		
			C_L = 3.3 μF		228		
t_f	V_{OUT} fall time	R_L = 100Ω	C_L = 0.1 μF		23		μs
			C_L = 1 μF		136		
			C_L = 3.3 μF		815		
V_{IN} = 3.6 V							
t_{ON}	Turn on time	R_L = 100Ω	C_L = 0.1 μF		202		μs
			C_L = 1 μF		215		
			C_L = 3.3 μF		220		
t_{OFF}	Turn off time	R_L = 100Ω	C_L = 0.1 μF		8		μs
			C_L = 1 μF		32		

© 2023 DIOO MICROCIRCUITS CO., LTD

			C_L = 3.3 μF		224		
t_r	V_{OUT} rise time	R_L = 100Ω	C_L = 0.1 μF		180		μs
			C_L = 1 μF		184		
			C_L = 3.3 μF		192		
t_f	V_{OUT} fall time	R_L = 100Ω	C_L = 0.1 μF		23		μs
			C_L = 1 μF		132		
			C_L = 3.3 μF		788		
V_{IN} = 4.2 V							
t_{ON}	Turn on time	R_L = 100Ω	C_L = 0.1 μF		180		μs
			C_L = 1 μF		194		
			C_L = 3.3 μF		200		
t_{OFF}	Turn off time	R_L = 100Ω	C_L = 0.1 μF		7		μs
			C_L = 1 μF		34		
			C_L = 3.3 μF		230		
t_r	V_{OUT} rise time	R_L = 100Ω	C_L = 0.1 μF		172		μs
			C_L = 1 μF		176		
			C_L = 3.3 μF		180		
t_f	V_{OUT} fall time	R_L = 100Ω	C_L = 0.1 μF		24		μs
			C_L = 1 μF		132		
			C_L = 3.3 μF		800		
V_{IN} = 5.0V							
t_{ON}	Turn on time	R_L = 100Ω	C_L = 0.1 μF		162		μs
			C_L = 1 μF		170		
			C_L = 3.3 μF		175		
t_{OFF}	Turn off time	R_L = 100Ω	C_L = 0.1 μF		8		μs
			C_L = 1 μF		30		
			C_L = 3.3 μF		228		
t_r	V_{OUT} rise time	R_L = 100Ω	C_L = 0.1 μF		165		μs
			C_L = 1 μF		168		
			C_L = 3.3 μF		168		
t_f	V_{OUT} fall time	R_L = 100Ω	C_L = 0.1 μF		24		μs
			C_L = 1 μF		130		
			C_L = 3.3 μF		816		

Specifications subject to change without notice.

© 2023 DIOO MICROCIRCUITS CO., LTD

Typical Performance Characteristics

Ion vs.Vin
（Vin non-capacitive）

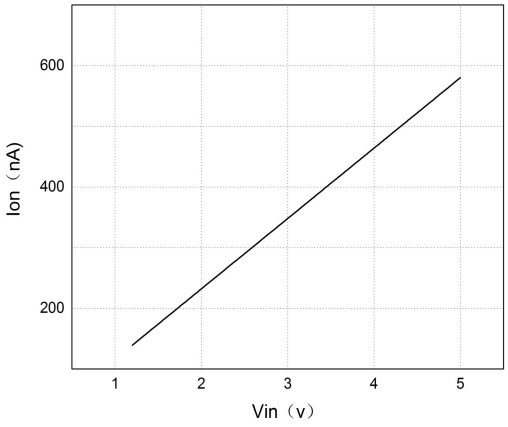

Iin(leakage) vs.Vin
（Vin = Von，Vout）

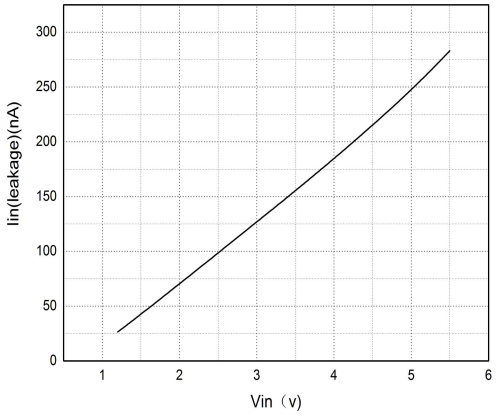

Iin(ON)vs.Vin
(Von=GND，Iout=0)

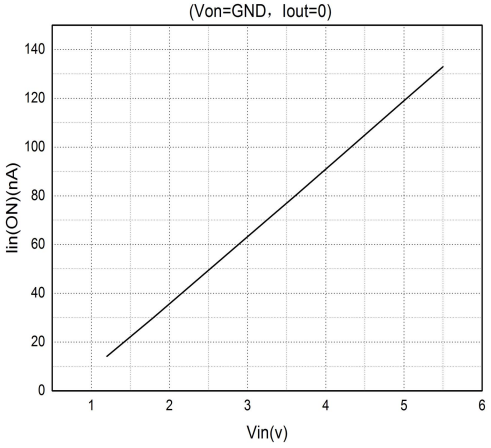

Iin(OFF)vs.Vin
(Vin = Von，OUT=Open)

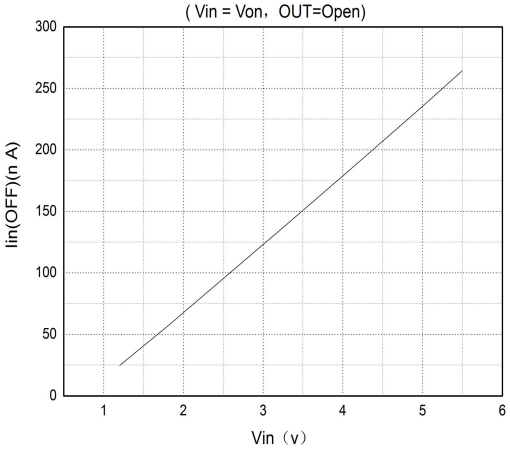

Ron vs.Vin
(Iload=200mA)

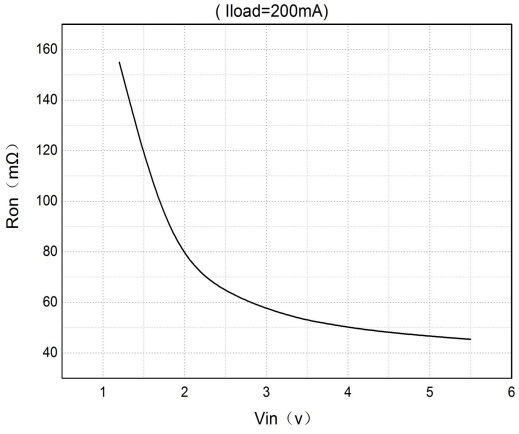

Ron vs.Temperature
（Iload=200mA）

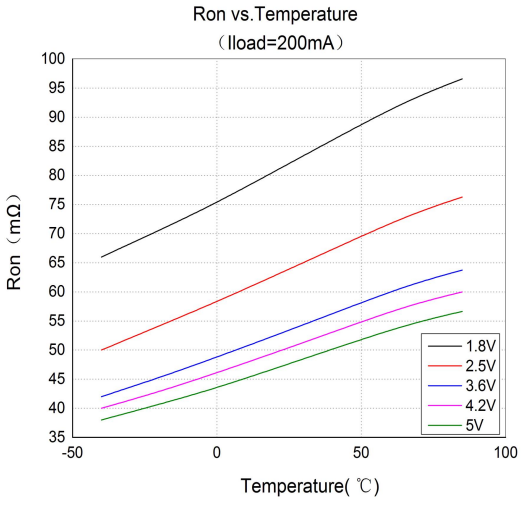

© 2023 DIOO MICROCIRCUITS CO., LTD

Detailed Description

Overview

The DIO7291 is a low ON-state resistance (R_{ON}) load switch with controlled turn on. It contains a P-channel MOSFET and can be turned on with a range of battery from 1.2 V to 5.5 V. An on/off input (ON) controls the switch, which can interface with low-voltage control signals.

Functional Block Diagram

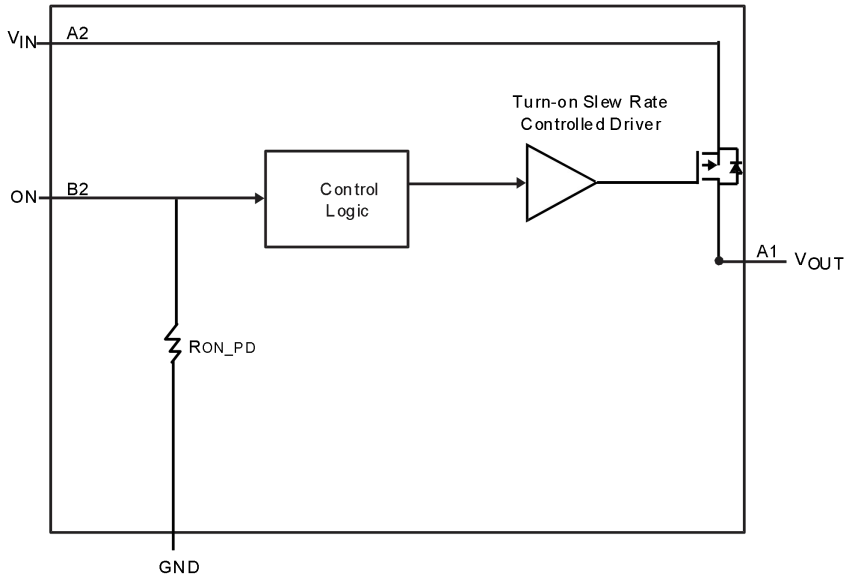

Figure 2. Block Diagram

Feature Description

ON/OFF Control

The state of the switch is controlled by the ON pin. When there is no fault, activating ON can let the switch to be in the on state. ON is active low and has a low threshold making it capable of interfacing with low-voltage signals. The ON pin is compatible with standard GPIO logic threshold. It can be used with any microcontroller with 1.2 V, 1.8 V, 2.5 V, 3.3 V GPIOs.

Device Functional Modes

Table 1 lists the functional modes of the DIO7291.

Table 1. Function Table

ON (Control Input)	V_{IN} to V_{OUT}
H	OFF
L	ON

© 2023 DIOO MICROCIRCUITS CO., LTD

Application and Implementation

Application Information

Input Capacitor

When the switch turns on into a discharged load capacitor or short-circuit, a capacitor needs to be placed between V_{IN} and GND to limit the voltage drop on the input supply caused by transient in-rush currents. A 1 μF ceramic capacitor, C_{IN}, place close to the pins is usually sufficient. C_{IN}'s higher values can be used to further reduce the voltage drop during high current application. It is recommended to have an input capacitor approximately 10 times higher than the output capacitor to avoid excessive voltage drop when switching heavy loads.

Output Capacitor

A C_{IN} greater than C_L is highly recommended when the integral body diode in the PMOS switch. When the system supply is removed, a C_L greater than C_{IN} can cause V_{OUT} to exceed V_{IN}. This could result in current flow through the body diode from V_{OUT} to V_{IN}.

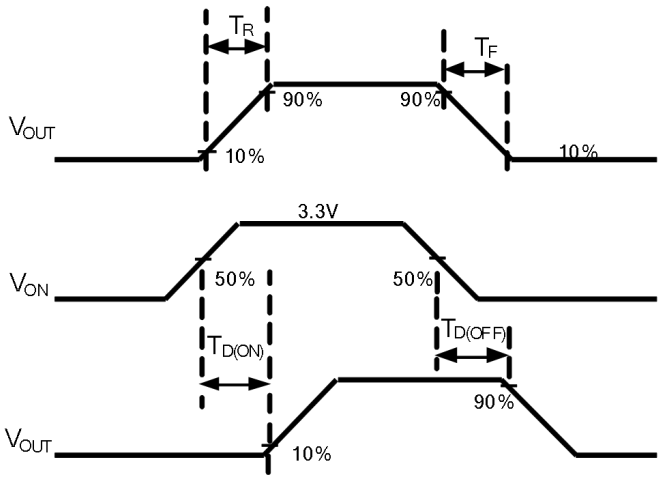

Figure 3. Timing Diagram

Typical Application

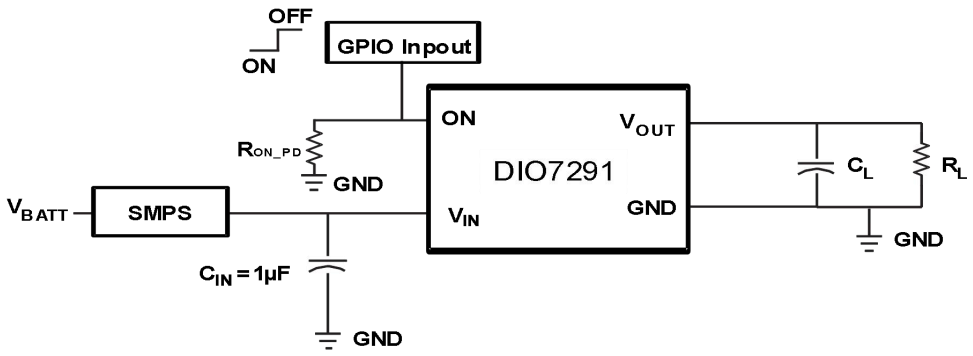

Note: SMPS: Switched mode power supply

Figure 4. Powering a Downstream Module

© 2023 DIOO MICROCIRCUITS CO., LTD

Design Requirements

Table 2 lists the design parameters for the DIO7291 device.

Table 2. Design Parameters

Design Parameter	Example Value
V_{IN}	1.8V
Load Current	0.3A
Ambient Temperature	25°C

Detailed Design Procedure

V_{IN} to V_{OUT} Voltage Drop

The voltage drop from V_{IN} to V_{OUT} is determined by the ON-resistance of the device and the load current. The R_{ON} can be found in Electrical Characteristics and is dependent on temperature. When the value of R_{ON} is found, Equation 1 can be used to calculate the voltage drop across the device:

$$\Delta V = I_{LOAD} \times r_{ON} \quad (1)$$

Where

- △V = Voltage drop across the device
- I_{LOAD} = Load current
- R_{ON} = ON-resistance of the device

At V_{IN} = 1.8 V, the DIO7291 has a R_{ON} value of 81 mΩ. Using this value and the defined load current, the above equation can be evaluated:

$$\triangle V = 0.30\ A \times 81\ m\Omega \quad (2)$$

Where,

$$\triangle V = 24.3\ mV$$

Therefore, the voltage drop across the device will be 24.3 mV.

Power Supply Recommendations

The DIO7291 is designed to operate with a V_{IN} range of 1.2 V to 5.5 V. This supply must be well regulated and placed as close to the device terminals as possible. It must also be able to withstand all transient and load currents, using a recommended input capacitance of 1 µF if necessary. If the supply is more than a few inches from the device terminals, additional bulk capacitance may be required in addition to the ceramic bypass capacitors. If additional bulk capacitance is required, an electrolytic, tantalum, or ceramic capacitor of 10 µF may be sufficient.

© 2023 DIOO MICROCIRCUITS CO., LTD

Layout

Layout Guidelines

All traces should be as short as possible for best performance. To be most effective, the input and output capacitors should be placed close to the DIO7291 to minimize the effects that parasitic trace inductances may have on normal and short circuit operation. Using wide traces for V_{IN}, V_{OUT}, and GND helps minimize the parasitic electrical effects along with minimizing the case to ambient thermal impedance.

Layout Example

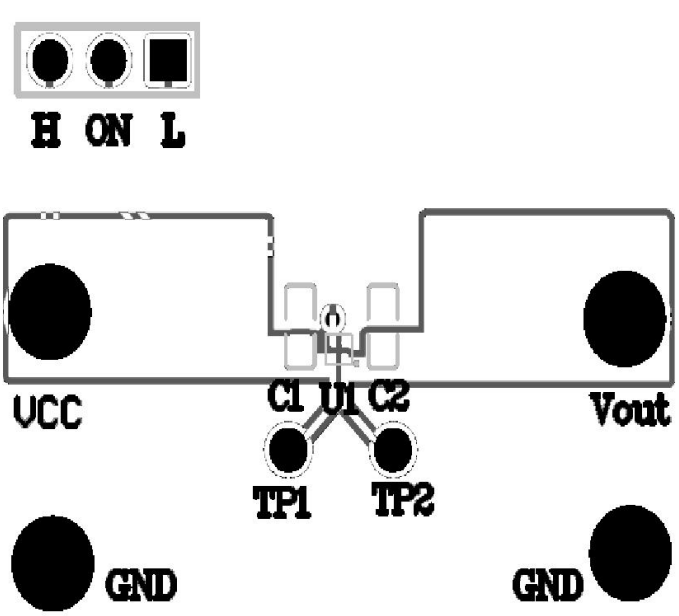

Figure 5. Recommended Board Layout

© 2023 DIOO MICROCIRCUITS CO., LTD

Physical Dimensions: WLCSP-4

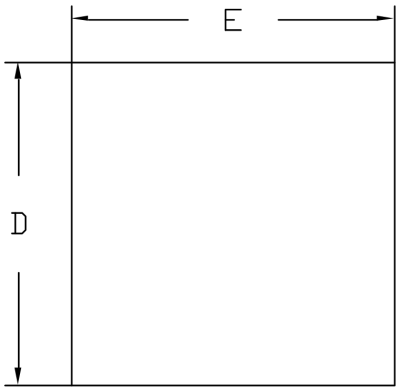

TOP VIEW
(MARK SIDE)

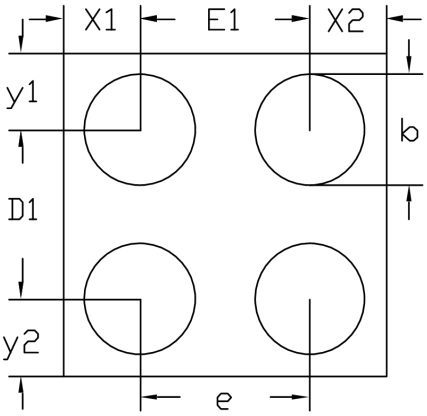

BOTTOM VIEW
(BALL SIDE)

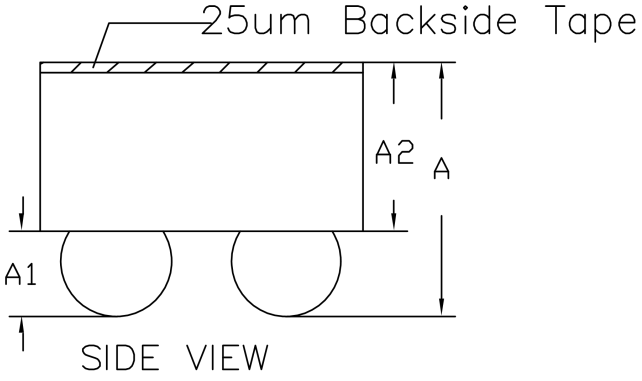

SIDE VIEW

COMMON DIMENSIONS (UNITS OF MEASURE = MILLIMETER)			
Symbol	**MIN**	**NOM**	**MAX**
A	0.475	0.500	0.525
A1	0.180	0.200	0.220
A2	0.275	0.300	0.325
D	0.730	0.760	0.790
D1		0.400 BSC	
E	0.730	0.760	0.790
E1		0.400 BSC	
b	0.240	0.260	0.280
e		0.400 BSC	
x1		0.180 REF	
x2		0.180 REF	
y1		0.180 REF	
y2		0.180 REF	

© 2023 DIOO MICROCIRCUITS CO., LTD

CONTACT US

Dioo is a professional design and sales corporation for high-quality and performance analog semiconductors. The company focuses on industry markets, such as, cell phone, handheld products, laptop, and medical equipment and so on. Dioo's product families include analog signal processing and amplifying, LED drivers and charger IC. Go to http://www.dioo.com for a complete list of Dioo product families.

For additional product information, or full datasheet, please contact with our Sales Department or Representatives.

© 2023 DIOO MICROCIRCUITS CO., LTD