DIO7297

Ultra-Small, Low-Input Voltage, Low r_{ON} Load Switch

Features

- Low-Input Voltage: 1.2V to 5.5V
- Ultra-Low ON-State Resistance
  - r_{ON}=47mΩ at V_{IN}=5.0V
  - r_{ON}=50mΩ at V_{IN}=4.2V
  - r_{ON}=54mΩ at V_{IN}=3.6V
  - r_{ON}=67mΩ at V_{IN}=2.5V
  - r_{ON}=88mΩ at V_{IN}=1.8V
  - r_{ON}=177mΩ at V_{IN}=1.2V
- Continuous Switch Current: 500mA (Max.)
- Ultra-Low Quiescent Current: 67nA at 1.8V
- Ultra-Low Shutdown Current: 35nA at 1.8V
- Low Control Input Thresholds Enable Use of 1.2V/1.8V/3.6V/4.2V/5.0V Logic
- Controlled Slew Rate to Avoid Inrush Current
- Package: WLCSP-4(0.9mm x 0.9mm, 0.5mm Pitch, 0.5mm Height)

Descriptions

DIO7297 device is low R_{ON} MOSEFT controlled by external logic pin, allowing optimization of battery life, and portable device autonomy. It includes a P-channel MOSFET that operates over an input voltage range of 1.2V to 5.5V. An on/off input (ON) controls the switch that can interface with low voltage control signals. A 120Ω on chip load resistor is added for output quick discharge when the switch is turned off. DIO7297 is housed in WLCSP-4 with 0.5mm pitch. It operates over the free-air temperature range of -40°C to 85°C.

Applications

- Cellular Phones
- GPS Devices
- Digital Cameras
- Peripheral Ports
- RF Modules
- MP3 Players
- Personal Digital Assistants (PDAs)
- Portable Instrumentation

Applications

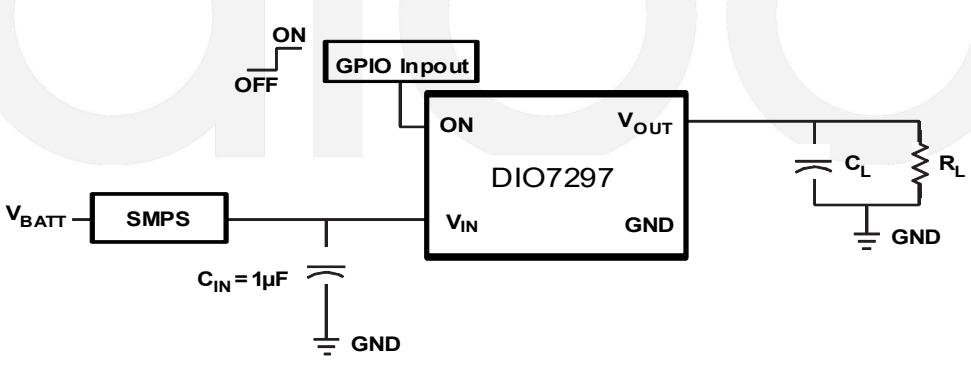

© 2020 DIOO MICROCIRCUITS CO., LTD

Ordering Information

Order Part Number	Top Marking		T_A	Package	
DIO7297WL4	W7G	Green	-40 to 85°C	WLCSP-4	Tape & Reel, 3000

Pin Assignment

4 Pins WLCSP



Figure 1 Top View & Bottom View

Pin Descriptions

Name	NO.	Description
V_{OUT}	A1	Switch output
V_{IN}	A2	Switch input, bypass this input with a ceramic capacitor to ground
GND	B1	Ground
ON	B2	Switch control input, active high

© 2020 DIOO MICROCIRCUITS CO., LTD

Absolute Maximum Ratings

Stresses beyond those listed under “Absolute Maximum Rating” may cause permanent damage to the device. These are stress ratings only and functional operation of the device at these or any other condition beyond those indicated in the operational sections of the specifications is not implied. Exposure to absolute maximum rating conditions for extended periods may affect device reliability.

Symbol	Parameter	Rating	Unit
V_{IN}	Input voltage	-0.3 to 6	V
V_{OUT}	Output voltage	V_{IN}+0.3	V
V_{ON}	Input voltage	-0.3 to 6	V
P_D	Power dissipation at T_A=25°C	0.48	W
I_{MAX}	Maximum continuous switch current	500	mA
T_A	Operating free air temperature range	-40 to 85	°C
T_{lead}	Maximum lead temperature (10s soldering time)	300	°C
T_{stg}	Storage temperature	-45 to 145	°C
θ_{JA}	Thermal Resistance	189.1	°C/W
ESD	HBM: All Pins	±4000	V
Latch up		±400	mA

Recommend Operating Conditions

The Recommended Operating Conditions table defines the conditions for actual device operation. Recommended Operating conditions are specified to ensure optimal performance to the datasheet specifications. DIOO does not Recommend exceeding them or designing to Absolute Maximum Ratings.

Symbol	Parameter	Rating	Unit
V_{IN}	Input voltage range	1 to 5.5	V
V_{OUT}	Output voltage range	V_{IN}	V
V_{IH}	High level input voltage, ON	0.95 to 5.5	V
V_{IL}	Low level input voltage, ON	0.4	V
C_{IN}	Input capacitor	1	μF

© 2020 DIOO MICROCIRCUITS CO., LTD

Electrical Characteristics

V_{IN}=1.0V to 5.5V, T_A = -40°C to 85°C, unless otherwise specified.

Symbol	Parameter	Conditions		T_A	Min.	Typ.	Max.	Unit
I_{IN}	Quiescent current	I_{OUT}=0, V_{IN}=V_{ON}	V_{IN}=1.2V	25°C		30		nA
				Full			44	
			V_{IN}=1.8V	25°C		67		
				Full			87	
			V_{IN}=3.6V	25°C		182		
				Full			220	
			V_{IN}=4.2V	25°C		221		
				Full			262	
			V_{IN}=5.0V	25°C		272		
				Full			325	
$I_{IN(OFF)}$	OFF-state supply current	V_{ON}=GND, OUT=Open	V_{IN}=1.2V	25°C		16		nA
				Full			180	
			V_{IN}=1.8V	25°C		35		
				Full			261	
			V_{IN}=3.6V	25°C		93		
				Full			629	
			V_{IN}=4.2V	25°C		115		
				Full			898	
			V_{IN}=5.0V	25°C		146		
				Full			1161	
$I_{IN(LEAKAGE)}$	OFF-state switch current	V_{ON}=GND, V_{OUT}=0	V_{IN}=1.2V	25°C		16		nA
				Full			180	
			V_{IN}=1.8V	25°C		35		
				Full			261	
			V_{IN}=3.6V	25°C		93		
				Full			629	
			V_{IN}=4.2V	25°C		115		
				Full			898	
			V_{IN}=5.0V	25°C		146		
				Full			1161	
R_{ON}	ON-state resistance	I_{OUT}=-200mA	V_{IN}=5.0V	25°C		47		mΩ
				Full			62	
			V_{IN}=4.2V	25°C		50		
				Full			66	
			V_{IN}=3.6V	25°C		54		
				Full			70	
			V_{IN}=2.5V	25°C		67		

© 2020 DIOO MICROCIRCUITS CO., LTD

				Full			86	
			V_{IN}=1.8V	25°C		88		
				Full			111	
			V_{IN}=1.2V	25°C		177		
				Full			195	
R_{PD}	Output pulldown resistance	V_{IN}=3.3V, V_{ON}=0, I_{OUT}=30mA		25°C		92	120	Ω
I_{ON}	ON input leakage current	V_{ON}=1.1V to 5.5V or GND		Full			48	nA

Specifications subject to change without notice.

Switching Characteristics

R_{L_CHIP}=120Ω, T_A = 25°C, unless otherwise specified.

Symbol	Parameter	Conditions		Min.	Typ.	Max.	Unit
V_{IN}=1.2V							
t_{ON}	Turnon time	R_L=500Ω	C_L=0.1μF		827		μs
			C_L=1μF		908		
			C_L=3.3μF		993		
t_{OFF}	Turnoff time	R_L=500Ω	C_L=0.1μF		16		μs
			C_L=1μF		103		
			C_L=3.3μF		271		
t_r	V_{OUT} rise time	R_L=500Ω	C_L=0.1μF		371		μs
			C_L=1μF		359		
			C_L=3.3μF		389		
t_f	V_{OUT} fall time	R_L=500Ω	C_L=0.1μF		28		μs
			C_L=1μF		276		
			C_L=3.3μF		875		
V_{IN}=1.8V							
t_{ON}	Turnon time	R_L=500Ω	C_L=0.1μF		524		μs
			C_L=1μF		577		
			C_L=3.3μF		633		
t_{OFF}	Turnoff time	R_L=500Ω	C_L=0.1μF		10		μs
			C_L=1μF		72		
			C_L=3.3μF		164		
t_r	V_{OUT} rise time	R_L=500Ω	C_L=0.1μF		241		μs
			C_L=1μF		234		
			C_L=3.3μF		247		

© 2020 DIOO MICROCIRCUITS CO., LTD

t_f	V_{OUT} fall time	R_L=500Ω	C_L=0.1μF		23		μs
			C_L=1μF		240		
			C_L=3.3μF		696		
V_{IN}=2.5V							
t_{ON}	Turnon time	R_L=500Ω	C_L=0.1μF		376		μs
			C_L=1μF		417		
			C_L=3.3μF		453		
t_{OFF}	Turnoff time	R_L=500Ω	C_L=0.1μF		9		μs
			C_L=1μF		65		
			C_L=3.3μF		143		
t_r	V_{OUT} rise time	R_L=500Ω	C_L=0.1μF		189		μs
			C_L=1μF		182		
			C_L=3.3μF		185		
t_f	V_{OUT} fall time	R_L=500Ω	C_L=0.1μF		22		μs
			C_L=1μF		238		
			C_L=3.3μF		640		
V_{IN}=3.0V							
t_{ON}	Turnon time	R_L=500Ω	C_L=0.1μF		314		μs
			C_L=1μF		350		
			C_L=3.3μF		384		
t_{OFF}	Turnoff time	R_L=500Ω	C_L=0.1μF		9		μs
			C_L=1μF		62		
			C_L=3.3μF		126		
t_r	V_{OUT} rise time	R_L=500Ω	C_L=0.1μF		169		μs
			C_L=1μF		167		
			C_L=3.3μF		161		
t_f	V_{OUT} fall time	R_L=500Ω	C_L=0.1μF		22		μs
			C_L=1μF		239		
			C_L=3.3μF		613		
V_{IN}=3.6V							
t_{ON}	Turnon time	R_L=500Ω	C_L=0.1μF		268		μs
			C_L=1μF		297		
			C_L=3.3μF		319		
t_{OFF}	Turnoff time	R_L=500Ω	C_L=0.1μF		8		μs
			C_L=1μF		61		
			C_L=3.3μF		107		

© 2020 DIOO MICROCIRCUITS CO., LTD

t_r	V_{OUT} rise time	R_L=500Ω	C_L=0.1μF		157		μs
			C_L=1μF		149		
			C_L=3.3μF		145		
t_f	V_{OUT} fall time	R_L=500Ω	C_L=0.1μF		22		μs
			C_L=1μF		228		
			C_L=3.3μF		571		
V_{IN}=4.2V							
t_{ON}	Turn on time	R_L=500Ω	C_L=0.1μF		236		μs
			C_L=1μF		263		
			C_L=3.3μF		282		
t_{OFF}	Turn off time	R_L=500Ω	C_L=0.1μF		8		μs
			C_L=1μF		56		
			C_L=3.3μF		87		
t_r	V_{OUT} rise time	R_L=500Ω	C_L=0.1μF		145		μs
			C_L=1μF		141		
			C_L=3.3μF		130		
t_f	V_{OUT} fall time	R_L=500Ω	C_L=0.1μF		21		μs
			C_L=1μF		225		
			C_L=3.3μF		528		
V_{IN}=5.0V							
t_{ON}	Turn on time	R_L=500Ω	C_L=0.1μF		202		μs
			C_L=1μF		226		
			C_L=3.3μF		240		
t_{OFF}	Turn off time	R_L=500Ω	C_L=0.1μF		8		μs
			C_L=1μF		55		
			C_L=3.3μF		81		
t_r	V_{OUT} rise time	R_L=500Ω	C_L=0.1μF		136		μs
			C_L=1μF		130		
			C_L=3.3μF		123		
t_f	V_{OUT} fall time	R_L=500Ω	C_L=0.1μF		21		μs
			C_L=1μF		222		
			C_L=3.3μF		484		

Specifications subject to change without notice.

© 2020 DIOO MICROCIRCUITS CO., LTD

Typical Performance Characteristics

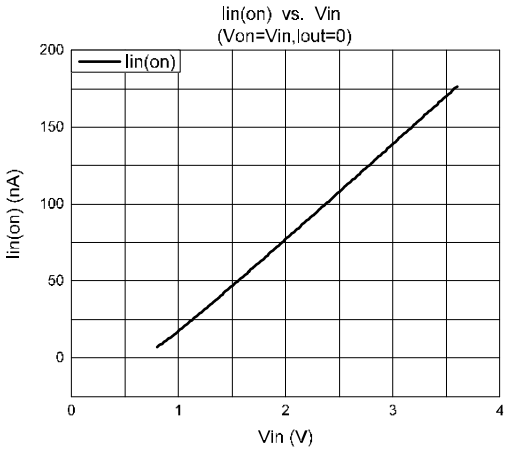

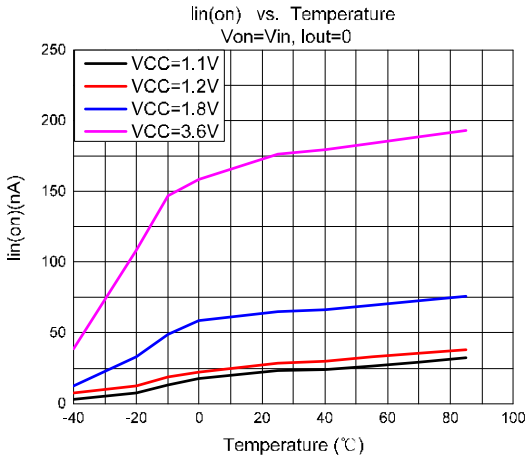

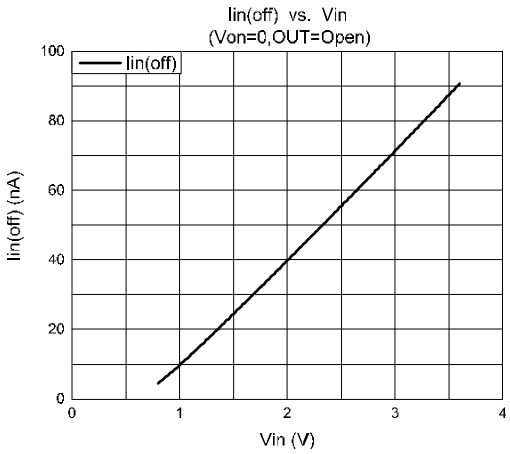

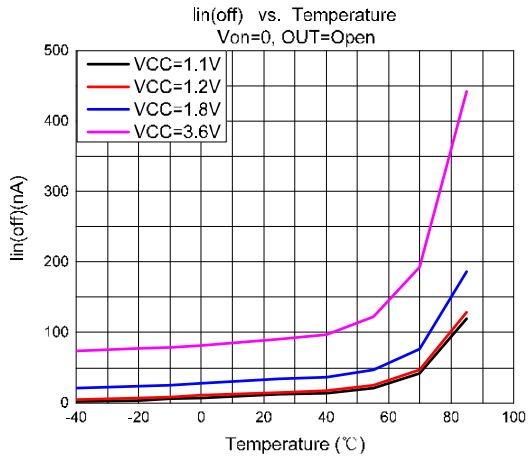

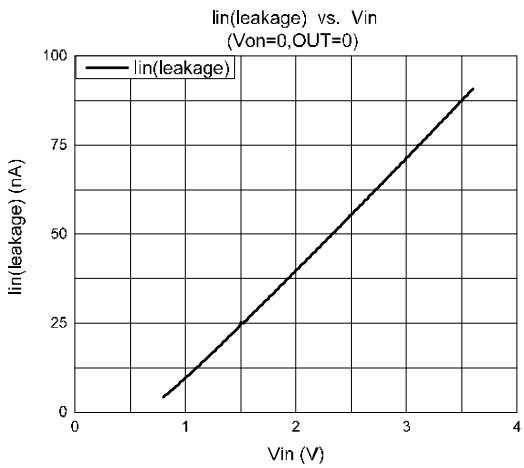

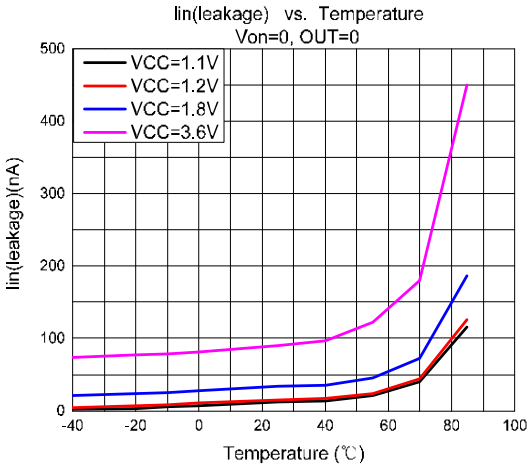

© 2020 DIOO MICROCIRCUITS CO., LTD

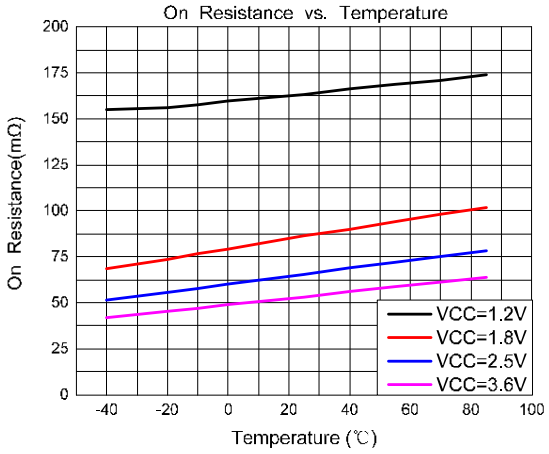

Detailed Description

Overview

DIO7297 is a low ON-state resistance (r_{ON}) load switch with controlled turn on. It contains a P-channel MOSFET and can be turned on with a range of battery from 1.0V to 5.5V. An on/off input (ON) controls the switch, which can interface with low-voltage control signals. A 120Ω on-chip load resistor is added for output quick discharge when the switch is turned off.

Functional Block Diagram

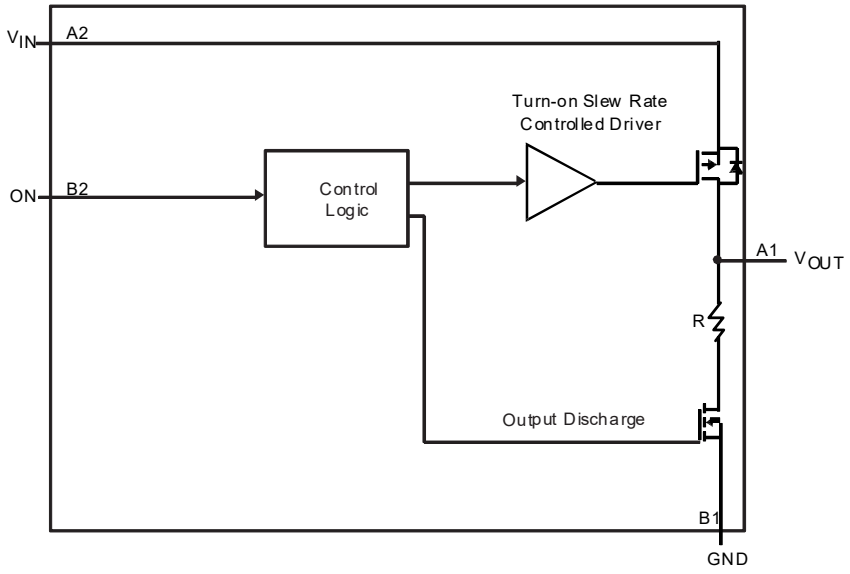

Figure 2. Block Diagram

© 2020 DIOO MICROCIRCUITS CO., LTD

Feature Description

ON/OFF Control

The state of the switch is controlled by the ON pin. When there is no fault, activating ON can let the switch to be in the on state. ON is active HI and has a low threshold making it capable of interfacing with low-voltage signals. The ON pin is compatible with standard GPIO logic threshold. It can be used with any microcontroller with 1.2V, 1.8V, 2.5V, 3.3V or 5.0V GPIOs.

Device Functional Modes

Table 1 lists the functional modes of the DIO7297.

Table 1. Function Table

ON (Control Input)	V_{IN} to V_{OUT}	V_{OUT} to GND
L	OFF	ON
H	ON	OFF

Application and Implementation

Application Information

Input Capacitor

When the switch turns on into a discharged load capacitor or short-circuit, a capacitor needs to be placed between V_{IN} and GND to limit the voltage drop on the input supply caused by transient in-rush currents. A 1μF ceramic capacitor, C_{IN}, place close to the pins is usually sufficient. C_{IN}'s higher values can be used to further reduce the voltage drop during high current application. It is recommended to have an input capacitor approximately 10 times higher than the output capacitor to avoid excessive voltage drop when switching heavy loads.

Output Capacitor

A C_{IN} greater than C_L is highly recommended when the integral body diode in the PMOS switch. When the system supply is removed, a C_L greater than C_{IN} can cause V_{OUT} to exceed V_{IN}. This could result in current flow through the body diode from V_{OUT} to V_{IN}.

Typical Application

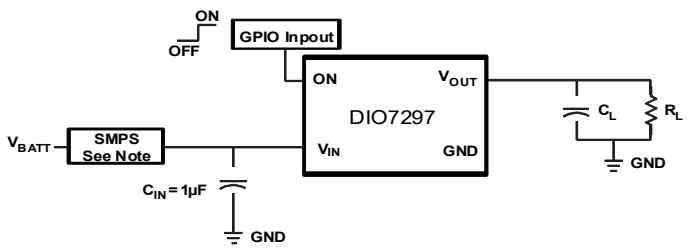

Note: Switched mode power supply

Figure 3. Powering a Downstream Module

© 2020 DIOO MICROCIRCUITS CO., LTD

Design Requirements

Table 2 lists the design parameters for the DIO7297 device.

Table 2. Design Parameters

Design Parameter	Example Value
V_{IN}	1.8V
Load Current	0.3A
Ambient Temperature	25°C

Detailed Design Procedure

V_{IN} to V_{OUT} Voltage Drop

The voltage drop from V_{IN} to V_{OUT} is determined by the ON-resistance of the device and the load current. The r_{ON} can be found in Electrical Characteristics and is dependent on temperature. When the value of r_{ON} is found, Equation 1 can be used to calculate the voltage drop across the device:

$$\Delta V = I_{LOAD} \times r_{ON} \quad (1)$$

Where

- △V= Voltage drop across the device
- I_{LOAD}= Load current
- r_{ON}= ON-resistance of the device

At VIN=1.8V, the DIO7297 has a r_{ON} value of 88mΩ. Using this value and the defined load current, the above equation can be evaluated:

$$\triangle V = 0.30A \times 88m\Omega \quad (2)$$

Where

- △V= 26.4mV

Therefore, the voltage drop across the device will be 24.9mV.

Power Supply Recommendations

The DIO7297 is designed to operate with a V_{IN} range of 1V to 5.5V. This supply must be well regulated and placed as close to the device terminals as possible. It must also be able to withstand all transient and load currents, using a recommended input capacitance of 1μF if necessary. If the supply is more than a few inches from the device terminals, additional bulk capacitance may be required in addition to the ceramic bypass capacitors. If additional bulk capacitance is required, an electrolytic, tantalum, or ceramic capacitor of 10μF may be sufficient.

© 2020 DIOO MICROCIRCUITS CO., LTD

Layout

Layout Guidelines

All traces should be as short as possible for best performance. To be most effective, the input and output capacitors should be placed close to the DIO7297 to minimize the effects that parasitic trace inductances may have on normal and short circuit operation. Using wide traces for V_{IN}, V_{OUT}, and GND helps minimize the parasitic electrical effects along with minimizing the case to ambient thermal impedance.

Layout Example

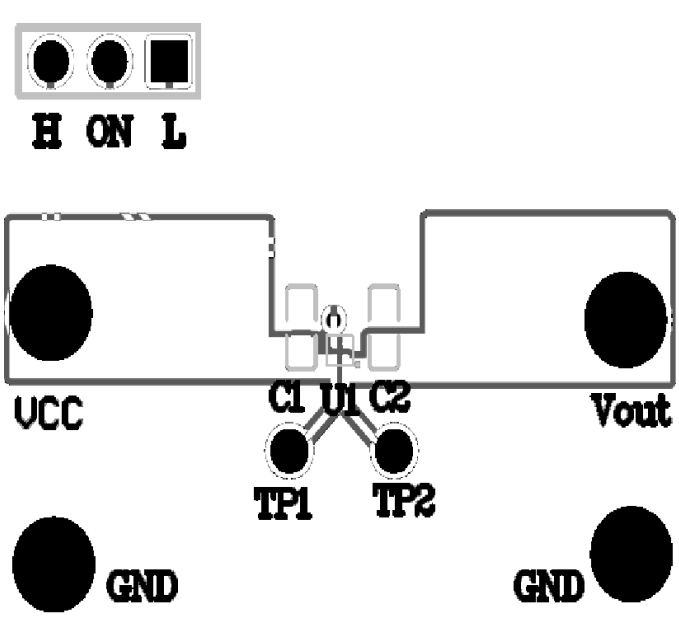

Figure 4. Recommended Board Layout

© 2020 DIOO MICROCIRCUITS CO., LTD

Physical Dimensions: WLCSP-4

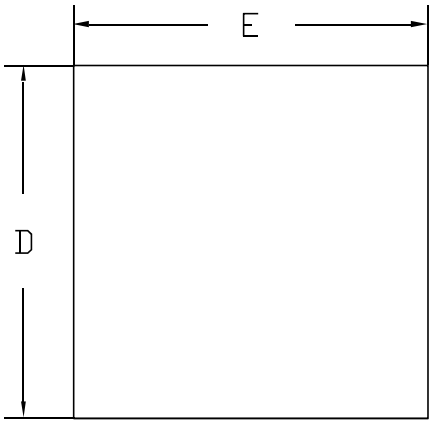

TOP VIEW
(MARK SIDE)

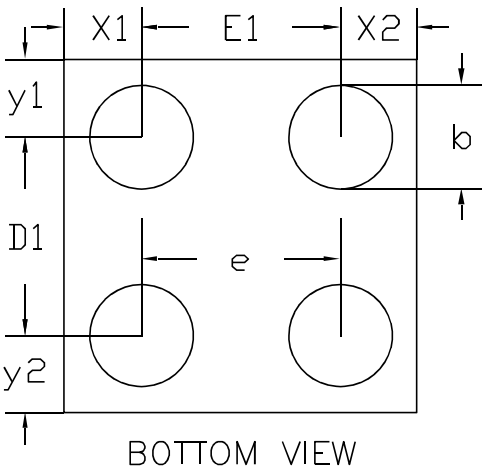

BOTTOM VIEW
(BALL SIDE)

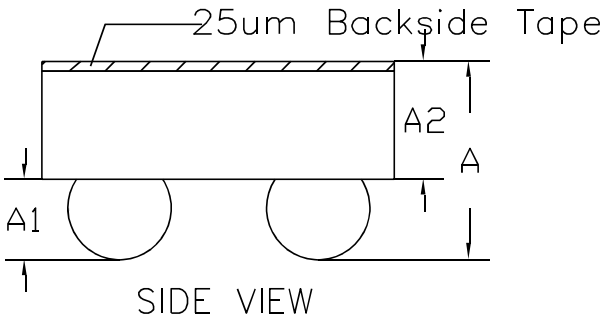

SIDE VIEW

COMMON DIMENSIONS (UNITS OF MEASURE=MILLIMETER)			
Symbol	**MIN**	**NOM**	**MAX**
A	0.460	0.500	0.540
A1	0.182	0.202	0.222
A2	0.278	0.298	0.318
D	0.868	0.888	0.908
D1		0.500BSC	
E	0.868	0.888	0.908
E1		0.500BSC	
b	0.230	0.260	0.290
e		0.500BSC	
x1		0.194 REF	
x2		0.194 REF	
y1		0.194 REF	
y2		0.194REF	

© 2020 DIOO MICROCIRCUITS CO., LTD

CONTACT US

Dioo is a professional design and sales corporation for high-quality and performance analog semiconductors. The company focuses on industry markets, such as, cell phone, handheld products, laptop, and medical equipment and so on. Dioo's product families include analog signal processing and amplifying, LED drivers and charger IC. Go to http://www.dioo.com for a complete list of Dioo product families.

For additional product information, or full datasheet, please contact with our Sales Department or Representatives.

© 2020 DIOO MICROCIRCUITS CO., LTD