DIO7298

Ultra-Small, Low-Input Voltage, Low r_{ON} Load Switch

Features

- Low-Input Voltage: 1.0V to 3.6V
- Ultra-Low ON-State Resistance
  - r_{ON}=40mΩ at V_{IN}=3.6V
  - r_{ON}=45mΩ at V_{IN}=2.5V
  - r_{ON}=56mΩ at V_{IN}=1.8V
  - r_{ON}=90mΩ at V_{IN}=1.2V
  - r_{ON}=106mΩ at V_{IN}=1.1V
- 2A Maximum Continuous Switch Current
- Ultra-Low Quiescent Current: 80nA at 1.8V
- Ultra-Low Shutdown Current: 50nA at 1.8V
- Low Control Input Thresholds Enable Use of 1.2V/1.8V/2.5V/3.3V Logic
- Controlled Slew Rate to Avoid Inrush Current: 276μs t_r
- Four-Terminal Wafer-Chip-Scale Package (WLCSP-4)
  - 0.9mm x 0.9mm, 0.5mm Pitch, 0.5mm Height

Descriptions

DIO7298 device is an ultra-small, low ON-state resistance (Ron) load switch with controlled turn on. The device contains a P-channel MOSFET that operates over an input voltage range of 1.0V to 3.6V. The switch is controlled by an on/off input (ON), which is capable of interfacing directly with low voltage control signals. A 120Ω on chip load resistor is added for output quick discharge when the switch is turned off. DIO7298 is available in a space saving 4 terminal WLCSP-4 with 0.5mm pitch (YZV). The device is characterized for operation over the free-air temperature range of -40°C to 85°C.

Applications

- Personal Digital Assistants (PDAs)
- Cellular Phones
- GPS Devices
- MP3 Players
- Digital Cameras
- Peripheral Ports
- Portable Instrumentation
- RF Modules

Typical Application

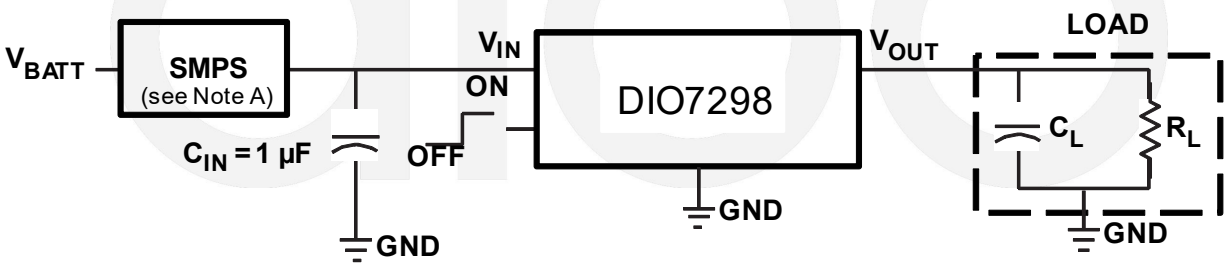

© 2020 DIOO MICROCIRCUITS CO., LTD

Ordering Information

Order Part Number	Top Marking		T_A	Package	
DIO7298WL4	W7B	Green	-40 to 85°C	WLCSP-4	Tape & Reel, 3000

Pin Assignment

WLCSP-4

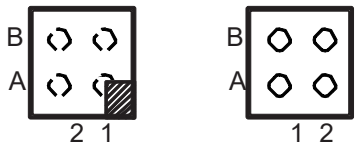

Figure 1. Top View & Bottom View

Pin Descriptions

Name	NO.	Description
V_{OUT}	A1	Switch output
V_{IN}	A2	Switch input, bypass this input with a ceramic capacitor to ground
GND	B1	Ground
ON	B2	Switch control input, active high

© 2020 DIOO MICROCIRCUITS CO., LTD

Absolute Maximum Ratings

Stresses beyond those listed under “Absolute Maximum Rating” may cause permanent damage to the device. These are stress ratings only and functional operation of the device at these or any other condition beyond those indicated in the operational sections of the specifications is not implied. Exposure to absolute maximum rating conditions for extended periods may affect device reliability.

Parameter		Rating	Unit
V_{IN}	Input voltage	-0.3 to 3.6	V
V_{OUT}	Output voltage	V_{IN}+0.3	V
V_{ON}	Input voltage	-0.3 to 3.6	V
P_D	Power dissipation at T_A=25°C	0.48	W
I_{MAX}	Maximum continuous switch current	2	A
T_A	Operating free air temperature range	-40 to 85	°C
T_{lead}	Maximum lead temperature (10s soldering time)	300	°C
T_{stg}	Storage temperature	-45 to 145	°C
θ_{JA}	Thermal Resistance	189.1	°C/W
ESD	HBM: All Pins	±4000	V
Latch up		±400	mA

Recommend Operating Conditions

The Recommended Operating Conditions table defines the conditions for actual device operation. Recommended Operating conditions are specified to ensure optimal performance to the datasheet specifications. DIOO does not Recommend exceeding them or designing to Absolute Maximum Ratings.

Parameter		Rating	Unit
V_{IN}	Input voltage range	1.0 to 3.6	V
V_{OUT}	Output voltage range	V_{IN}	V
V_{IH}	High level input voltage, ON	0.85 to 3.6	V
V_{IL}	Low level input voltage, ON	0.4	V
C_{IN}	Input capacitor	1	μF

© 2020 DIOO MICROCIRCUITS CO., LTD

Electrical Characteristics

V_{IN}=1.0V to 3.6V, T_A = -40°C to 85°C, unless otherwise specified.

Symbol	Parameter	Conditions		T_A	Min.	Typ.	Max.	Unit
I_{IN}	Quiescent current	I_{OUT}=0, V_{IN}=V_{ON}	V_{IN}=1.1V	Full		40		nA
			V_{IN}=1.2V	Full		50		
			V_{IN}=1.8V	Full		80		
			V_{IN}=3.6V	Full		180		
$I_{IN(OFF)}$	OFF-state supply current	V_{ON}=GND, OUT=Open	V_{IN}=1.1V	Full		30		nA
			V_{IN}=1.2V	Full		33		
			V_{IN}=1.8V	Full		50		
			V_{IN}=3.6V	Full		125		
$I_{IN(LEAKAGE)}$	OFF-state switch current	V_{ON}=GND, V_{OUT}=0	V_{IN}=1.1V	Full		30		nA
			V_{IN}=1.2V	Full		33		
			V_{IN}=1.8V	Full		50		
			V_{IN}=3.6V	Full		125		
R_{ON}	ON-state resistance	I_{OUT}=-200mA	V_{IN}=3.6V	25°C		40		mΩ
				Full			70	
			V_{IN}=2.5V	25°C		45		
				Full			80	
			V_{IN}=1.8V	25°C		56		
				Full			90	
			V_{IN}=1.2V	25°C		90		
				Full			120	
			V_{IN}=1.1V	25°C		106		
				Full			140	
R_{PD}	Output pull down resistance	V_{IN}=3.3V, V_{ON}=0, I_{OUT}=30mA		25°C		92	120	Ω
I_{ON}	ON input leakage current	V_{ON}=1.0V to 3.6V or GND		Full			48	nA

Specifications subject to change without notice.

© 2020 DIOO MICROCIRCUITS CO., LTD

Switching Characteristics

R_{L_CHIP}=120Ω, T_A = 25°C, unless otherwise specified.

Symbol	Parameter	Conditions		Min.	Typ.	Max.	Unit
V_{IN}=1.1V							
t_{ON}	Turn on time	R_L=500Ω	C_L=0.1μF		632		μs
			C_L=1μF		688		
			C_L=3.3μF		752		
t_{OFF}	Turn off time	R_L=500Ω	C_L=0.1μF		20		μs
			C_L=1μF		120		
			C_L=3.3μF		376		
t_r	V_{OUT} rise time	R_L=500Ω	C_L=0.1μF		496		μs
			C_L=1μF		476		
			C_L=3.3μF		512		
t_f	V_{OUT} fall time	R_L=500Ω	C_L=0.1μF		29		μs
			C_L=1μF		296		
			C_L=3.3μF		988		
V_{IN}=1.2V							
t_{ON}	Turn on time	R_L=500Ω	C_L=0.1μF		566		μs
			C_L=1μF		626		
			C_L=3.3μF		680		
t_{OFF}	Turn off time	R_L=500Ω	C_L=0.1μF		16		μs
			C_L=1μF		104		
			C_L=3.3μF		304		
t_r	V_{OUT} rise time	R_L=500Ω	C_L=0.1μF		446		μs
			C_L=1μF		432		
			C_L=3.3μF		452		
t_f	V_{OUT} fall time	R_L=500Ω	C_L=0.1μF		26		μs
			C_L=1μF		256		
			C_L=3.3μF		836		
V_{IN}=1.8V							
t_{ON}	Turn on time	R_L=500Ω	C_L=0.1μF		382		μs
			C_L=1μF		416		
			C_L=3.3μF		452		
t_{OFF}	Turn off time	R_L=500Ω	C_L=0.1μF		11		μs
			C_L=1μF		64		
			C_L=3.3μF		200		

© 2020 DIOO MICROCIRCUITS CO., LTD

t_r	V_{OUT} rise time	R_L=500Ω	C_L=0.1μF		328		μs
			C_L=1μF		320		
			C_L=3.3μF		336		
t_f	V_{OUT} fall time	R_L=500Ω	C_L=0.1μF		20		μs
			C_L=1μF		220		
			C_L=3.3μF		716		
V_{IN}=2.5V							
t_{ON}	Turn on time	R_L=500Ω	C_L=0.1μF		297		μs
			C_L=1μF		318		
			C_L=3.3μF		344		
t_{OFF}	Turn off time	R_L=500Ω	C_L=0.1μF		10		μs
			C_L=1μF		64		
			C_L=3.3μF		196		
t_r	V_{OUT} rise time	R_L=500Ω	C_L=0.1μF		276		μs
			C_L=1μF		268		
			C_L=3.3μF		272		
t_f	V_{OUT} fall time	R_L=500Ω	C_L=0.1μF		19		μs
			C_L=1μF		220		
			C_L=3.3μF		708		
V_{IN}=3.0V							
t_{ON}	Turn on time	R_L=500Ω	C_L=0.1μF		262		μs
			C_L=1μF		280		
			C_L=3.3μF		304		
t_{OFF}	Turn off time	R_L=500Ω	C_L=0.1μF		9		μs
			C_L=1μF		60		
			C_L=3.3μF		176		
t_r	V_{OUT} rise time	R_L=500Ω	C_L=0.1μF		259		μs
			C_L=1μF		252		
			C_L=3.3μF		256		
t_f	V_{OUT} fall time	R_L=500Ω	C_L=0.1μF		19		μs
			C_L=1μF		208		
			C_L=3.3μF		692		
V_{IN}=3.6V							
t_{ON}	Turn on time	R_L=500Ω	C_L=0.1μF		233		μs
			C_L=1μF		250		
			C_L=3.3μF		260		

© 2020 DIOO MICROCIRCUITS CO., LTD

t_{OFF}	Turn off time	R_L=500Ω	C_L=0.1μF		9		μs
			C_L=1μF		60		
			C_L=3.3μF		172		
t_r	V_{OUT} rise time	R_L=500Ω	C_L=0.1μF		242		μs
			C_L=1μF		240		
			C_L=3.3μF		248		
t_f	V_{OUT} fall time	R_L=500Ω	C_L=0.1μF		18		μs
			C_L=1μF		204		
			C_L=3.3μF		648		

Specifications subject to change without notice.

Typical Performance Characteristics

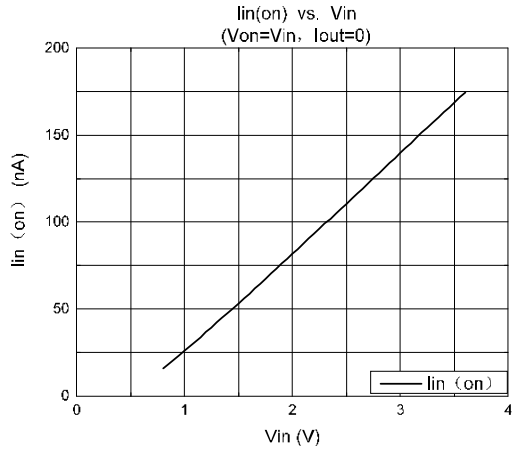

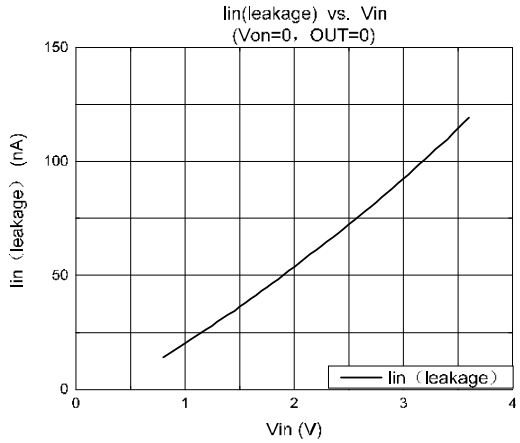

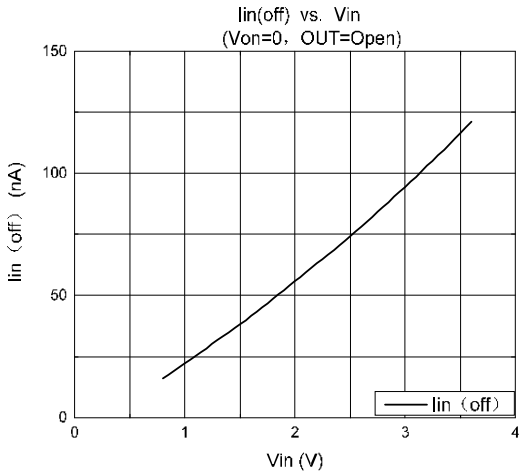

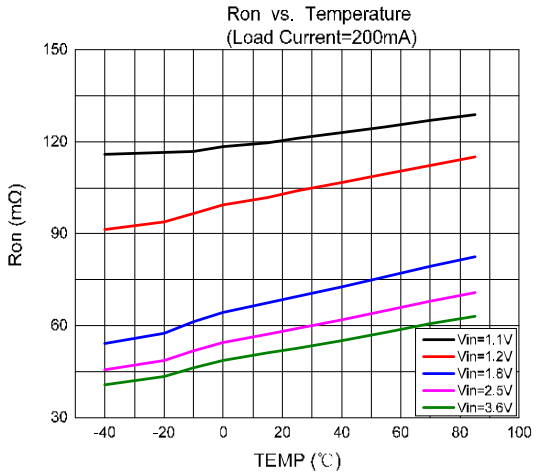

© 2020 DIOO MICROCIRCUITS CO., LTD

Detailed Description

Overview

DIO7298 is a low ON-state resistance (r_{ON}) load switch with controlled turn on. The device contains a P-channel MOSFET that operates over an input voltage range of 1.0V to 3.6V. The switch is controlled by an on/off input (ON), which is capable of interfacing directly with low-voltage control signals. A 120Ω on-chip load resistor is added for output quick discharge when the switch is turned off.

Functional Block Diagram

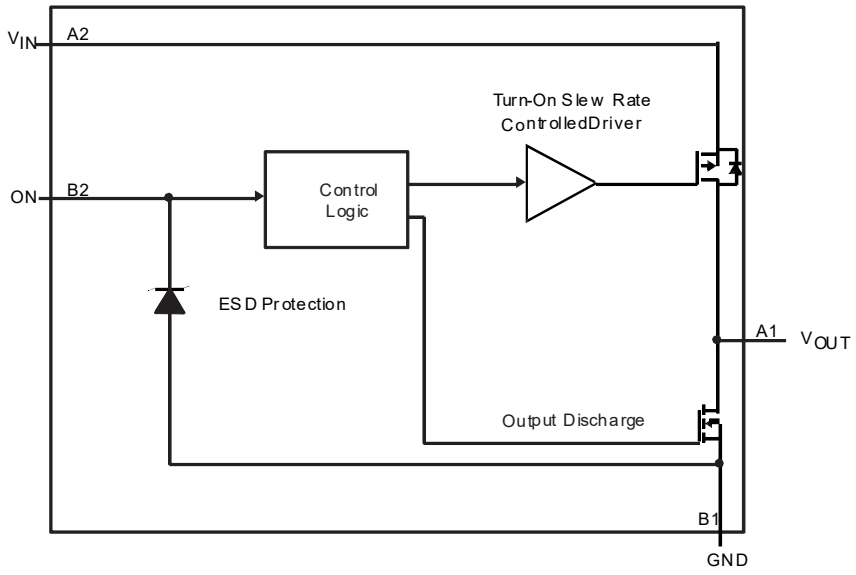

Figure 2. Block Diagram

Feature Description

ON/OFF Control

The ON pin controls the state of the switch. Activating ON continuously holds the switch in the on state so long as there is no fault. ON is active HI and has a low threshold making it capable of interfacing with low-voltage signals. The ON pin is compatible with standard GPIO logic threshold. It can be used with any microcontroller with 1.2V, 1.8V, 2.5V, 3.3V GPIOs.

Device Functional Modes

Table 1 lists the functional modes of the DIO7298.

Table 1. Function Table

ON (Control Input)	V_{IN} to V_{OUT}	V_{OUT} to GND
L	OFF	ON
H	ON	OFF

© 2020 DIOO MICROCIRCUITS CO., LTD

Application and Implementation

Application Information

Input Capacitor

To limit the voltage drop on the input supply caused by transient in-rush currents when the switch turns on into a discharged load capacitor or short-circuit, a capacitor needs to be placed between V_{IN} and GND. A 1μF ceramic capacitor, C_{IN}, place close to the pins is usually sufficient. Higher values of C_{IN} can be use to further reduce the voltage drop during high current application. When switching heavy loads, it is recommended to have an input capacitor approximately 10 times higher than the output capacitor to avoid excessive voltage drop.

Output Capacitor

Due to the integral body diode in the PMOS switch, a C_{IN} greater than C_L is highly recommended. A C_L greater than C_{IN} can cause V_{OUT} to exceed V_{IN} when the system supply is removed. This could result in current flow through the body diode from V_{OUT} to V_{IN}.

Typical Application

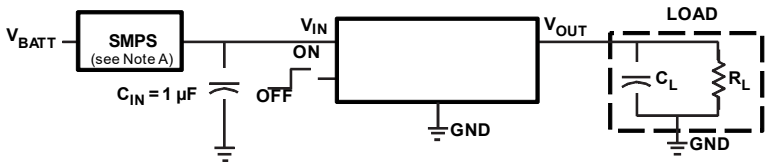

A. Switched mode power supply

Figure 3. Powering a Downstream Module

Design Requirements

Table 2 lists the design parameters for the DIO7298 device.

Table 2. Design Parameters

Design Parameter	Example Value
V_{IN}	1.8V
Load Current	0.3A
Ambient Temperature	25°C

© 2020 DIOO MICROCIRCUITS CO., LTD

Detailed Design Procedure

V_{IN} to V_{OUT} Voltage Drop

The voltage drop from V_{IN} to V_{OUT} is determined by the ON-resistance of the device and the load current. The r_{ON} can be found in Electrical Characteristics and is dependent on temperature. When the value of r_{ON} is found, Equation 1 can be used to calculate the voltage drop across the device:

$$\Delta V = I_{LOAD} \times r_{ON} \quad (1)$$

Where

- △V= Voltage drop across the device
- I_{LOAD}= Load current
- r_{ON}= ON-resistance of the device

At V_{IN}=1.8V, the DIO7298 has a r_{ON} value of 56mΩ. Using this value and the defined load current, the above equation can be evaluated:

$$\Delta V = 0.30A \times 56m\Omega \quad (2)$$

Where,

△V= 16.8mV

Therefore, the voltage drop across the device will be 16.8mV.

Power Supply Recommendations

The device is designed to operate with a V_{IN} range of 1.0V to 3.6V. This supply must be well regulated and placed as close to the device terminals as possible. It must also be able to withstand all transient and load currents, using a recommended input capacitance of 1μF if necessary. If the supply is more than a few inches from the device terminals, additional bulk capacitance may be required in addition to the ceramic bypass capacitors. If additional bulk capacitance is required, an electrolytic, tantalum, or ceramic capacitor of 10μF may be sufficient.

Layout

Layout Guidelines

For best performance, all traces should be as short as possible. To be most effective, the input and output capacitors should be placed close to the device to minimize the effects that parasitic trace inductances may have on normal and short circuit operation. Using wide traces for V_{IN}, V_{OUT}, and GND helps minimize the parasitic electrical effects along with minimizing the case to ambient thermal impedance.

© 2020 DIOO MICROCIRCUITS CO., LTD

Layout Example

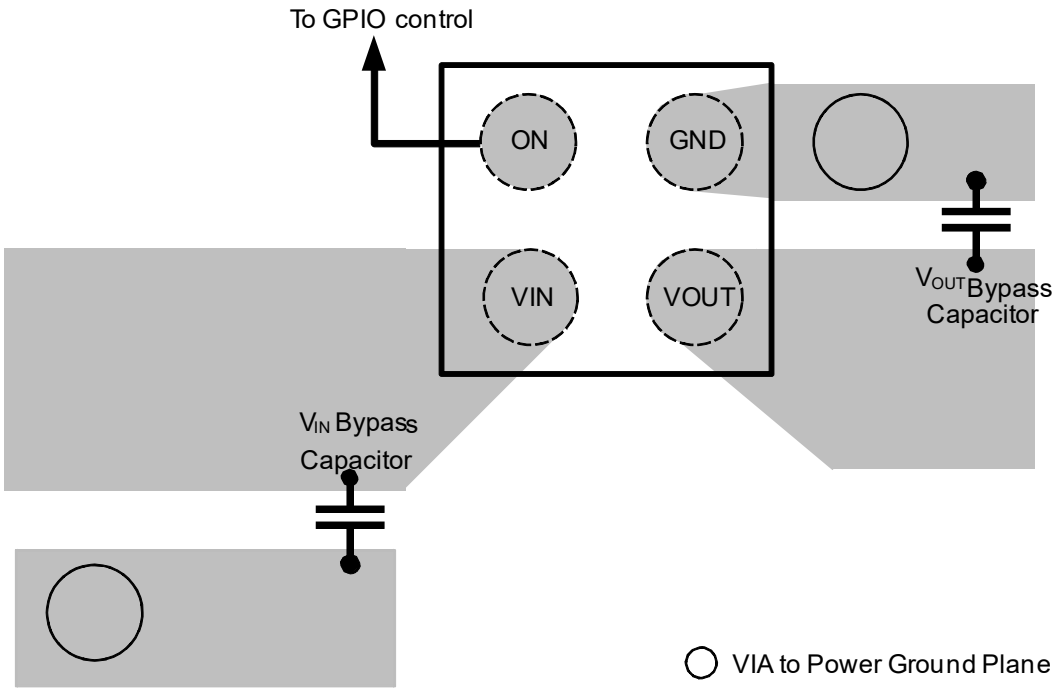

Figure 4. Recommended Board Layout

© 2020 DIOO MICROCIRCUITS CO., LTD

Physical Dimensions: WLCSP-4

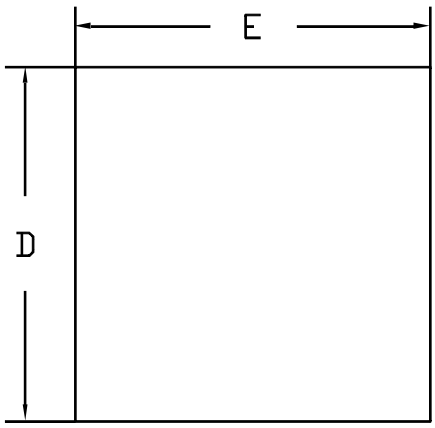

TOP VIEW
(MARK SIDE)

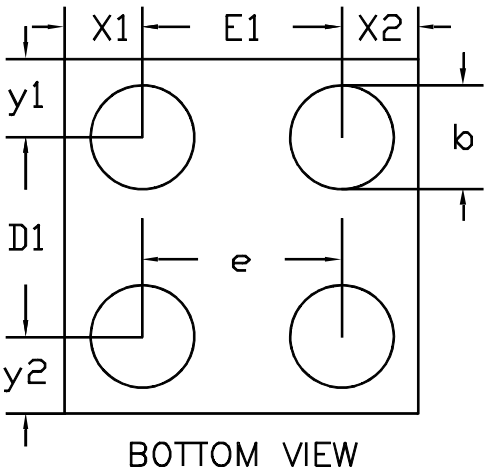

BOTTOM VIEW
(BALL SIDE)

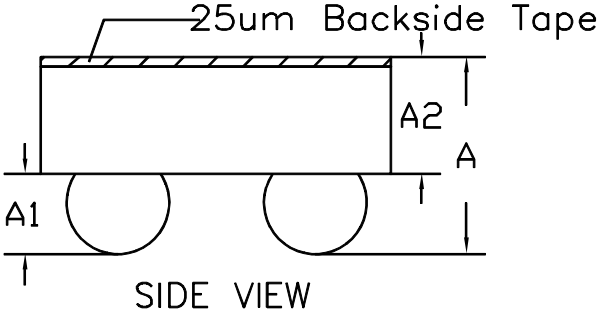

SIDE VIEW

COMMON DIMENSIONS (UNITS OF MEASURE=MILLIMETER)			
Symbol	**MIN**	**NOM**	**MAX**
A	0.460	0.500	0.540
A1	0.182	0.202	0.222
A2	0.278	0.298	0.318
D	0.868	0.888	0.908
D1		0.500 BSC	
E	0.868	0.888	0.908
E1		0.500 BSC	
b	0.230	0.260	0.290
e		0.500 BSC	
x1		0.194 REF	
x2		0.194 REF	
y1		0.194 REF	
y2		0.194 REF	

© 2020 DIOO MICROCIRCUITS CO., LTD

CONTACT US

Dioo is a professional design and sales corporation for high-quality and performance analog semiconductors. The company focuses on industry markets, such as, cell phone, handheld products, laptop, and medical equipment and so on. Dioo's product families include analog signal processing and amplifying, LED drivers and charger IC. Go to http://www.dioo.com for a complete list of Dioo product families.

For additional product information, or full datasheet, please contact with our Sales Department or Representatives.

© 2020 DIOO MICROCIRCUITS CO., LTD