# DIO7301/1B

## 5.5V rated 2A capable slew rate controlled load switch

## Features

- 1.8V to 5.5V operation voltage range
- Low quiescent current <1μA when disabled
- Reverse current blocking when switch is off
- DIO7301B: Built-in 100Ω(typ) output discharge resistor
- 48mΩ(typ) N−MOSFET Resistor:
- DC Current Up to 2A (max.)
- Peak Current Up to 5A (max.)
- Built−in Soft−Start 3ms
- Active High with Integrated Bridge
- Pb−Free Device SOT23-5

## Applications

- Cell Phone and Digital Camera
- PDA and Notebook
- LCD Monitor
- TV and Set-Top Box

## Descriptions

The DIO7301/1B is a Low On-Resistance N−channel MOSFET controlled by a soft−start sequence of 3ms for mobile applications.

The low $R_{DS}$(on) allows system supplying or battery charging up to DC 2A.The device is enable automatically if a power supply is connected on $V_{IN}$ pin (active High) and maintained off if no power input (internal pull down).

Due to the current consumption optimization, the leakage current is drastically decreased from the battery connected to the device, which allows extending the battery life.

## Block Diagram

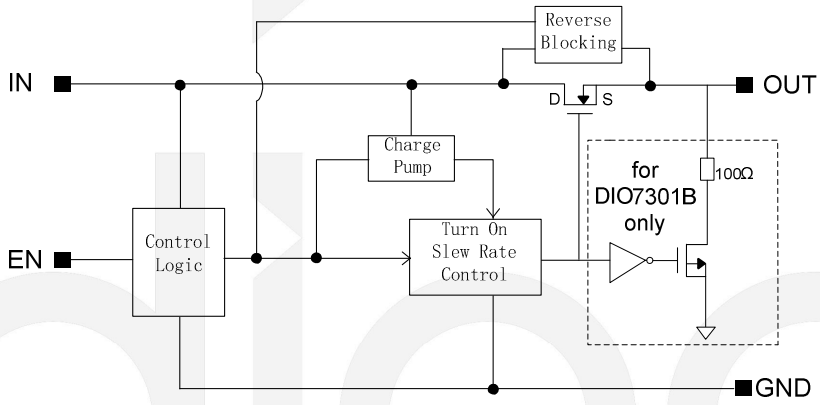


## Typical Application

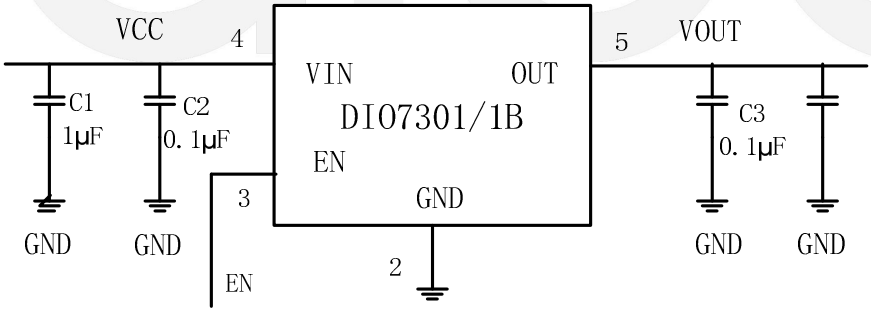



© 2017 DIOO MICROCIRCUITS CO., LTD

## Ordering Information

| Order Part Number | Top Marking | Output Discharge Resistance | | $T_A$ | Package | |
|---|---|---|---|---|---|---|
| DIO7301ST5 | YWXW | NO | Green | -40 to +85°C | SOT23-5 | Tape & Reel, 3000 |
| DIO7301BST5 | YWXV | Yes | Green | -40 to +85°C | SOT23-5 | Tape & Reel, 3000 |

**Marking Definition**

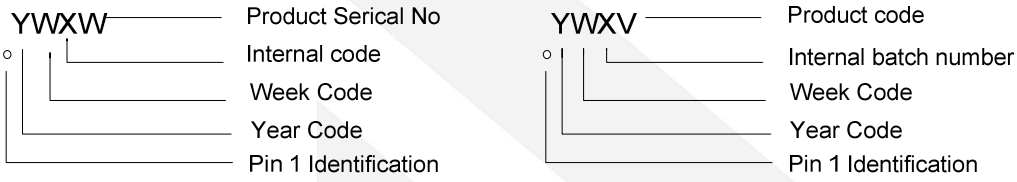


## Pin Assignments

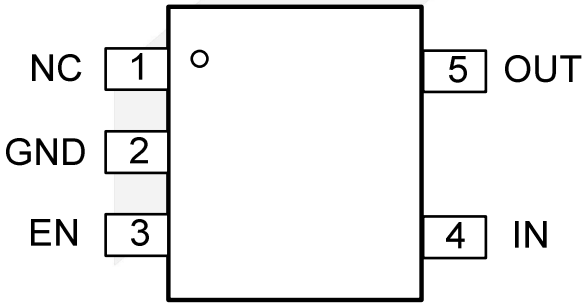


## Pin Description

| Pin | Name | Type | Description |
|---|---|---|---|
| 1 | NC | NC | Not connect. Connect to GND Recommended. |
| 2 | GND | Power | GND |
| 3 | EN | Input | Enable input, logic high active. |
| 4 | IN | Power | Switch Input voltage; connect a 1μF or greater ceramic capacitor from IN to GND as close as possible to the IC. |
| 5 | OUT | Output | Switch Output; connect a 1μF capacitor from OUT to GND as close as possible to the IC. |


© 2017 DIOO MICROCIRCUITS CO., LTD

## Absolute Maximum Ratings

Stresses beyond those listed under “Absolute Maximum Rating” may cause permanent damage to the device. These are stress ratings only and functional operation of the device at these or any other condition beyond those indicated in the operational sections of the specifications is not implied. Exposure to absolute maxim rating conditions for extended periods may affect device reliability.

| Parameter | | Rating | Unit |
|---|---|---|---|
| $V_{IN}$ | | -0.3 to 6 | V |
| $V_{OUT}$,EN | | -0.3 to 6 | V |
| Storage Temperature | | -65 to 150 | °C |
| Maximum Junction Range | | -40 to 145 | °C |
| Thermal Resistance, $\theta_{JA}$ | | 190 | °C/W |
| Power Dissipation, ($T_A$=25°C) | | 526 | mW |
| Latch Up Protection | | 200 | mA |
| ESD | HBM, JEDEC: JESD22-A114 | 6 | kV |
| | CDM, JEDEC : JESD22-C101 | 2 | |

## Recommended Operating Conditions

The Recommended Operating Conditions table defines the conditions for actual device operation to ensure optimal performance to the datasheet specifications. DIOO does not recommend exceeding them or designing to Absolute Maximum Ratings.

| Symbol | Parameter | Conditions | Min. | Typ. | Max. | Unit |
|---|---|---|---|---|---|---|
| $V_{IN}$ | Operational Power Supply | | 1.8 | | 5.5 | V |
| $V_{EN}$ | Enable Voltage | | 0 | | 5.5 | V |
| $C_{IN}$ | Decoupling input capacitor | | 1 | | | μF |
| $C_{OUT}$ | Decoupling output capacitor | USB port per Hub | 1 | | | μF |
| $I_{OUT}$ | Maximum DC Current | $T_A$=25°C | | | 2 | A |
| $I_{PEAK}$ | Maximum Peak Current | 1ms pulse width at 217Hz ,$T_A$=25°C | | | 5 | A |
| $T_A$ | Ambient Temperature Range | | -40 | 25 | 85 | °C |
| $T_J$ | Junction Temperature Range | | -40 | 25 | 125 | °C |


© 2017 DIOO MICROCIRCUITS CO., LTD

# Electrical Characteristics

$T_A$=25°C $V_{IN}$ = 5V, unless otherwise noted.

| Symbol | Parameter | Conditions | | Min. | Typ. | Max. | Unit |
|---|---|---|---|---|---|---|---|
| **POWER SWITCH** | | | | | | | |
| $R_{DS(ON)}$ | Static drain-source on-state resistance | $V_{IN}$=5V,$T_A$ = 25°C | | 40 | 48 | 60 | mΩ |
| | | $I_{OUT}$=200mA,-40°C< $T_A$ <85°C | | | | 85 | mΩ |
| $t_R$ | Switch turn-on edge rising time | $V_{IN}$=4.5V | $C_{LOAD}$=100μF,$R_{LOAD}$=150Ω | 2 | 2.5 | 5 | ms |
| $t_F$ | Switch turn-off edge falling time | $V_{IN}$=4.5V | $C_{LOAD}$=100μF,$R_{LOAD}$=150Ω (DIO7301) | 17 | 35 | 52 | ms |
| | | | $C_{LOAD}$=100μF,$R_{LOAD}$=150Ω (DIO7301B) | 9 | 13 | 17 | ms |
| $t_{DON}$ | Switch turn-on delay | $V_{IN}$=4.5V; $C_{LOAD}$=100μF | 50% of EN pin to $V_{OUT}$=10% of fully on | 0.7 | 1.5 | 2.3 | ms |
| $t_{DOFF}$ | switch turn-off delay | $V_{IN}$=4.5V; $C_{LOAD}$=100μF | 50% of EN pin to $V_{OUT}$=90% of fully on | 7.5 | 15 | 22.5 | μs |
| **ENABLE INPUT EN** | | | | | | | |
| $V_{IH}$ | High-level input voltage | | | 1.45 | | | V |
| $V_{IL}$ | Low-level input voltage | | | | | 0.85 | V |
| $R_{PD}$ | Pull-down resistance at EN pin | $T_A$ = -45°C to +85°C | | | 1 | | MΩ |
| **REVERSE-LEAKAGE PROTECTION** | | | | | | | |
| $I_{REV}$ | Reverse-current protection | $V_{IN}$=0V, $V_{OUT}$=4.2V, -40°C< $T_A$ <85°C, EN="0" | | | 1 | 2 | μA |
| **QUIESCENT CURRENT** | | | | | | | |
| $I_Q$ | Current consumption | $V_{IN}$=5V, $V_{OUT}$ floating, EN =5V | | | 100 | 140 | μA |
| $I_{SDN}$ | shutdown current | $V_{IN}$=5V, En="0", $V_{OUT}$=GND,-40°C< $T_A$ <85°C | | | | 1 | μA |

**Note:** This parameter is guaranteed by design and characterization.



© 2017 DIOO MICROCIRCUITS CO., LTD

# Application information

**Enable**

Enable pin voltage in the active high means on. This part is automatically turned on when the input voltage enables the device. In the other side, this part is turned off when the input voltage is not available, which limits current consumption from battery to $V_{OUT}$ pin.

**Input Capacitor**

To limit the voltage drop on the input supply caused by transient inrush currents, an input capacitor is placed to the $V_{IN}$ and GND as close as possible. The value of the input capacitor is recommended 1μF at least. Higher values capacitor can help to further reduce the voltage drop.

**Output Capacitor**

While the device works, a capacitor from 100nF to 1μFacross $V_{OUT}$ and GND is recommended to accommodate load transient condition. It also helps to prevent parasitic inductance forces $V_{OUT}$ below GND when switching off. Output capacitor has the minimal effect on device's turn on slew rate time.

**Blocking Control**

The blocking control circuitry switches the bulk of the power NMOS. When the part is off (No $V_{IN}$ or EN tied to GND externally), the body diode limits the leakage current $I_{REV}$ from OUT to IN. In this condition, the anode of the body diode is connected to IN pin and the cathode is connected to OUT pin. During the operation, the anode of the body diode is connected to OUT pin and the cathode is connected to IN pin to prevent the discharge of the power supply.


© 2017 DIOO MICROCIRCUITS CO., LTD

## Typical Performance Characteristics

$T_A$=25°C $V_{IN}$ = 5V, unless otherwise noted.

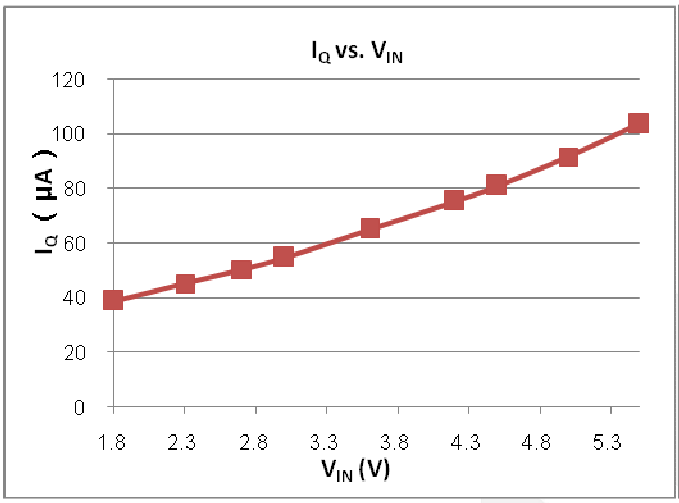


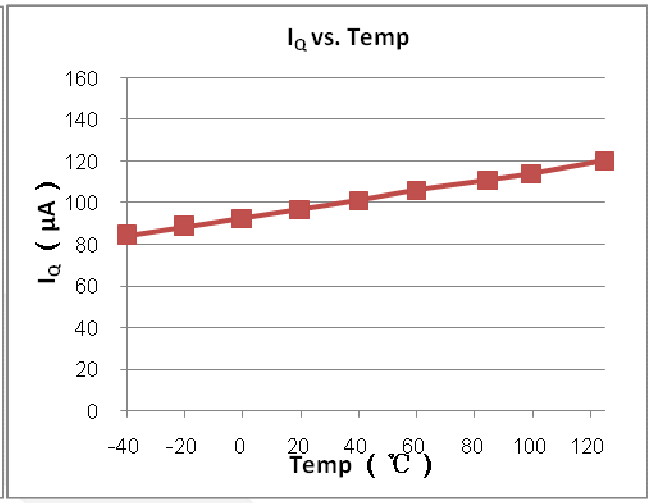


**$V_{IN}$=5V, $R_{OUT}$=5Ω, $C_{OUT}$=100μF, Turn on delay time**

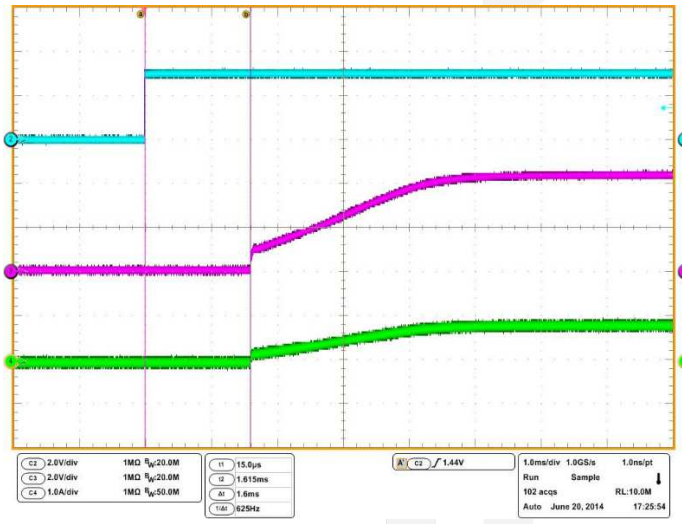

**$V_{IN}$=5V, $R_{OUT}$=5Ω, $C_{OUT}$=100μF, Turn off delay time**

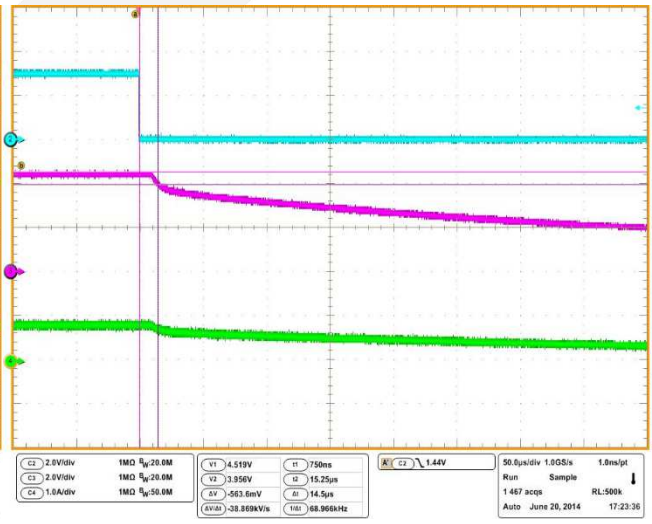

**$V_{IN}$=5V, $R_{OUT}$=5.1Ω, $V_{IN}$ Startup**

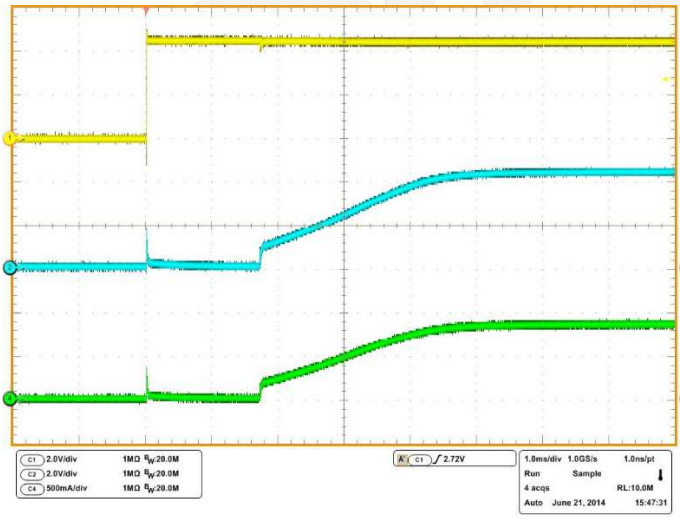

**$V_{IN}$=5V, $R_{OUT}$=5.1Ω, $V_{IN}$ Shutdown**

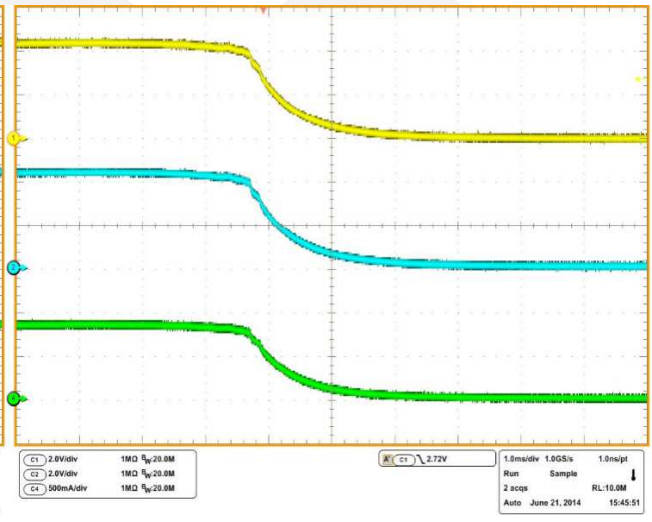



© 2017 DIOO MICROCIRCUITS CO., LTD

$V_{IN}$=5V, $R_{OUT}$=5.1Ω, EN Startup

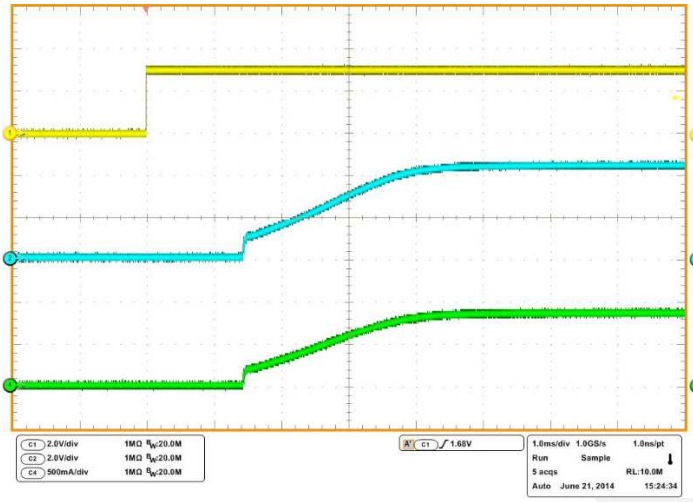

$V_{IN}$=5V, $R_{OUT}$=5.1Ω, EN Shutdown

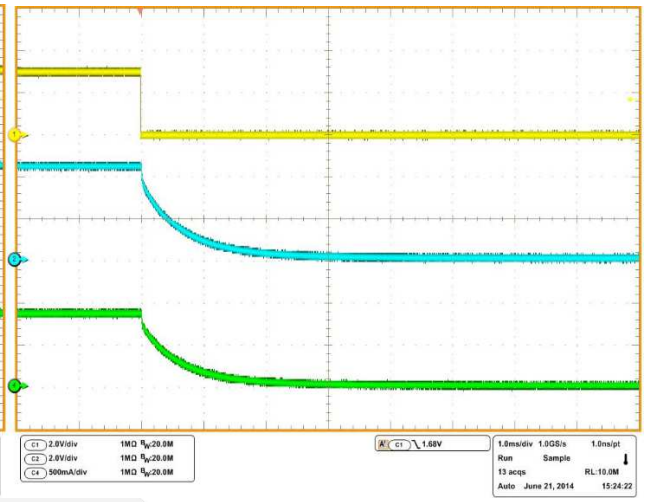



© 2017 DIOO MICROCIRCUITS CO., LTD

## Physical Dimensions: SOT-23-5

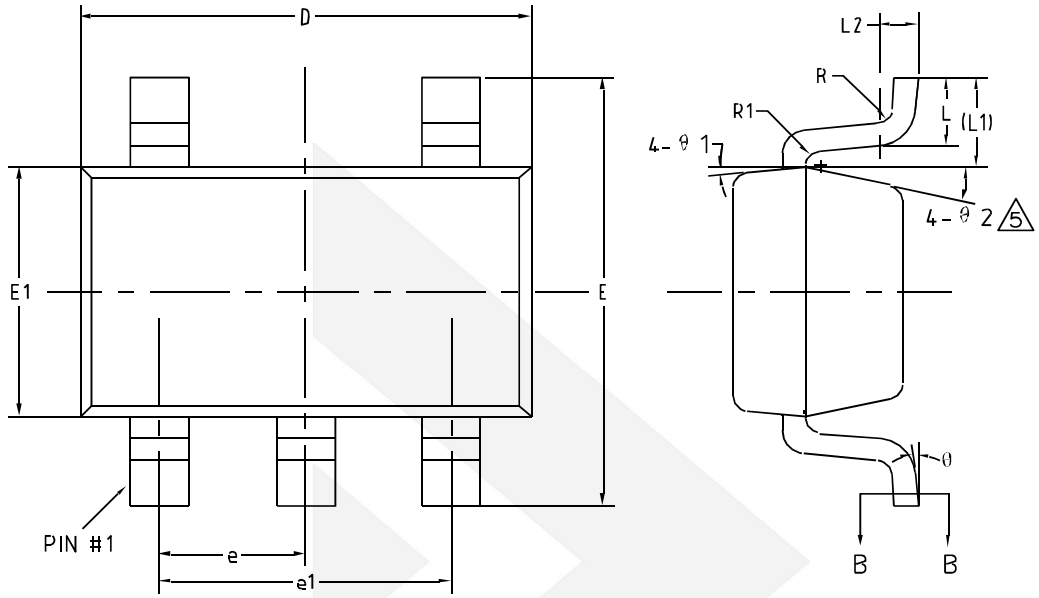


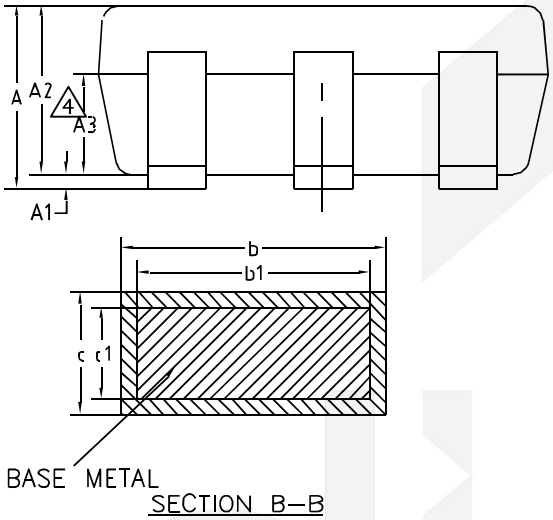


| COMMON DIMENSIONS (UNITS OF MEASURE=MILLIMETER) | | | |
|---|---|---|---|
| **Symbol** | **MIN** | **NOM** | **MAX** |
| A | - | - | 1.25 |
| A1 | 0 | - | 0.15 |
| A2 | 1.00 | 1.10 | 1.20 |
| A3 | 0.60 | 0.65 | 0.70 |
| b | 0.36 | - | 0.50 |
| b1 | 0.36 | 0.38 | 0.45 |
| c | 0.14 | - | 0.20 |
| c1 | 0.14 | 0.15 | 0.16 |
| D | 2.826 | 2.926 | 3.026 |
| E | 2.60 | 2.80 | 3.00 |
| E1 | 1.526 | 1.626 | 1.726 |
| e | 0.90 | 0.95 | 1.00 |
| e1 | 1.80 | 1.90 | 2.00 |
| L | 0.35 | 0.45 | 0.60 |
| L1 | 0.59REF | | |
| L2 | 0.25BSC | | |
| R | 0.10 | - | - |
| R1 | 0.10 | - | 0.25 |
| Θ | 0° | - | 8° |
| Θ1 | 3° | 5° | 7° |
| Θ2 | 6° | - | 14° |



© 2017 DIOO MICROCIRCUITS CO., LTD

## CONTACT US

Dioo is a professional design and sales corporation for high-quality and performance analog semiconductors. The company focuses on industry markets, such as, cell phone, handheld products, laptop, and medical equipment and so on. Dioo's product families include analog signal processing and amplifying, LED drivers and charger IC. Go to http://www.dioo.com for a complete list of Dioo product families.

For additional product information, or full datasheet, please contact with our Sales Department or Representatives.



© 2017 DIOO MICROCIRCUITS CO., LTD