DIO7970S

5.5 V, 4 A, 4.9 mΩ On-Resistance Load Switch

Features

- Input voltage range from 0.75 to 5.5 V
- Maximum continuous switch current (I_{MAX}): 4 A
- Quiescent current: 26 μA (typ.) at V_{IN} > 1.2 V
- Shutdown current: 1 μA (typ.) at V_{IN} > 1.8 V
- Controlled slew rate to avoid inrush current
  - Turn-on time: 2600 μs at 3.6 V
  - Turn-on time: 1500 μs at 0.75 V
- On-resistance
  - R_{ON} = 4.9 mΩ (typ.) at V_{IN} ≥ 1.8 V
  - R_{ON} = 7.7 mΩ (typ.) at V_{IN} = 0.75 V
- Low threshold enable (EN) supports logic as low as 0.9 V (V_{IH})
- Thermal shutdown
- Output pulldown resistance (R_{PD}): 150 Ω (typ.) at V_{IN} = 3.6 V
- Package: WLCSP-8

Applications

- Notebook computers
- Table computers
- Industrial PCs
- Smart phones
- Storage instrument

Descriptions

The DIO7970S is a space-saving load switch with a controlled turn-on to reduce inrush current. Containing an n-channel MOSFET, the device can operate over an input voltage range of 0.75 V to 5.5 V and pulsed switch currents up to 4 A.

To achieve a minimum switch ON resistance (R_{ON}), an integrated charge pump biases the NMOS switch. On and off input (EN) controls the switch, which can interface directly with low-voltage control signals.

The DIO7970S will be turned off by the thermal shutdown when the junction temperature is above the threshold, and be turned back on when the junction temperature stabilizes to a safe range.

A 150 Ω on-chip pulldown resistor is connected between VOUT and GND to prevent the output floating when the switch is disabled. In order to reduce inrush current, the device contains an internally controlled rise time.

The DIO7970S is available in a WLCSP-8 (0.5 mm pitch) package, which is rated over the temperature range of -40°C to 105°C.

Typical Application

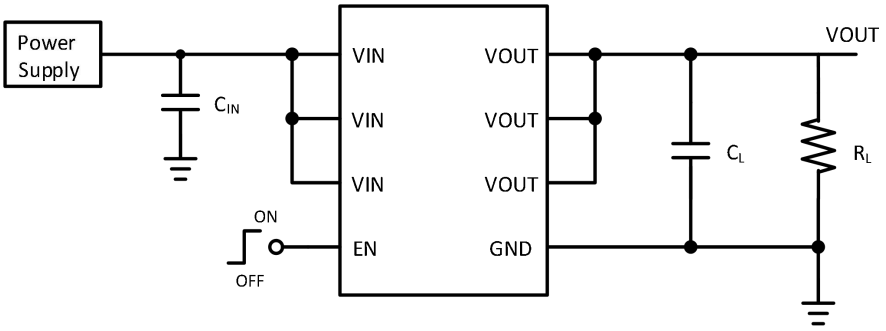

Figure 1. Typical application

© 2024 DIOO MICROCIRCUITS CO., LTD

Ordering Information

Ordering Part No.	Top Marking	MSL	RoHS	T_A	Package	
DIO7970SWL8	GJVS	1	Green	-40 to 105°C	WLCSP-8	Tape & Reel, 5000

Pin Assignments

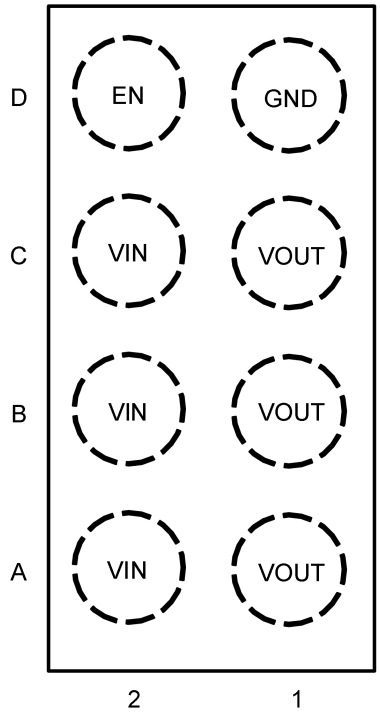

Figure 2. Pin assignment (Top view)

Pin Definitions

Pin Name	NO.	Description
GND	D1	Ground.
EN	D2	Switch control input. Do not leave the pin floating.
VIN	A2/B2/C2	Switch input.
VOUT	A1/B1/C1	Switch output.

© 2024 DIOO MICROCIRCUITS CO., LTD

Absolute Maximum Ratings

Stresses beyond those listed under the Absolute Maximum Rating table may cause permanent damage to the device. These are stress ratings only and functional operation of the device at these or any other condition beyond those indicated in the operational sections of the specifications is not implied. Exposure to absolute maximum rating conditions for extended periods may affect device reliability. DIOO does not recommend exceeding them or designing to absolute maximum ratings.

Symbol	Parameter	Rating	Unit
V_{IN}	Input voltage	-0.3 to 6	V
V_{OUT}	Output voltage	-0.3 to 6	V
V_{EN}	EN voltage	-0.3 to 6	V
I_{MAX}	Maximum continuous switch current	≤ 4	A
I_{PLS}	Maximum pulsed switch current, pulse < 300 μs, 2% duty cycle	≤ 6	A
T_J	Maximum junction temperature	Internally limited	
T_{STG}	Storage temperature	-65 to 150	°C
ESD	Human-body model (HBM) per ESDA/JEDEC JS-001	±4000	V
	Charged-device model (CDM) per ESDA/JEDEC JS -002	±4000	V
$R_{\theta JA}$	Junction-to-ambient thermal resistance	130	°C/W
$R_{\theta JC}$	Junction-to-case thermal resistance	54	°C/W

Recommended Operating Conditions

The Recommended Operating Conditions table defines the conditions for actual device operation. Recommended operating conditions are specified to ensure optimal performance to the datasheet specifications.

Symbol	Parameter	Rating	Unit
V_{IN}	Input voltage	0.75 to 5.5	V
V_{EN}	EN voltage	0 to 5.5	V
V_{OUT}	Output voltage	≤ V_{IN}	V
T_J	Operating temperature	–40 to 125	°C
T_A	Operating free-air temperature	–40 to 105	°C

Note:

(1) Over operating free-air temperature range, unless otherwise noted.

© 2024 DIOO MICROCIRCUITS CO., LTD

Electrical Characteristics

V_{IN} = 0.75 V to 5.5 V, unless otherwise noted.

Symbol	Parameter	Test Conditions		Min	Typ	Max	Unit
V_{IH}	High-level input voltage, EN		–40°C to 105°C	0.9			V
V_{IL}	Low-level input voltage, EN		–40°C to 105°C			0.45	V
I_Q	Quiescent current	V_{OUT} = Open, Switch enabled, V_{IN} > 1.2 V	–40°C to 85°C		26	65	µA
			–40°C to 105°C			75	µA
		V_{OUT} = Open, Switch enabled, V_{IN} ≤ 1.2 V	–40°C to 85°C		16	50	µA
			–40°C to 105°C			55	µA
I_{SD}	Shutdown current	V_{OUT} = GND, Switch disabled V_{IN} = 5 V	–40°C to 85°C		1.3	24	µA
			–40°C to 105°C			58	µA
		V_{OUT} = GND, Switch disabled, V_{IN} > 1.8 V	–40°C to 85°C		1.0	15	µA
			–40°C to 105°C			36	µA
		V_{OUT} = GND, Switch disabled, V_{IN} ≤ 1.8 V	–40°C to 85°C		0.9	7	µA
			–40°C to 105°C			17	µA
R_{ON}	ON-resistance	I_{OUT} = –200 mA V_{IN} ≥ 1.8 V	25°C		4.9	8	mΩ
			–40°C to 85°C			9.5	mΩ
			–40°C to 105°C			11.5	mΩ
		I_{OUT} = –200 mA V_{IN} = 1.2 V	25°C		5.7	9.9	mΩ
			–40°C to 85°C			10.9	mΩ
			–40°C to 105°C			12.9	mΩ
		I_{OUT} = –200 mA V_{IN} = 0.75 V	25°C		7.7	13.5	mΩ
			–40°C to 85°C			14.5	mΩ
			–40°C to 105°C			16.5	mΩ
R_{PD}	Output pulldown	I_{OUT} = 3 mA, Switch disabled, V_{IN} = 3.6 V	–40°C to 105°C		150		Ω
		I_{OUT} = 3 mA, Switch disabled, V_{IN} = 0.75 V	–40°C to 105°C		1.5		kΩ
I_{EN}	EN input leakage	V_{EN} = 0 V to 3.6 V	–40°C to 105°C			0.1	µA
T_{SD}	Thermal shutdown	T_J rising			150		°C
$T_{SD,HYS}$	Thermal shutdown hysteresis	T_J falling			25		°C

Note:

(1) Specifications subject to change without notice.

© 2024 DIOO MICROCIRCUITS CO., LTD

Switching Characteristics

V_{EN} = 3.6 V, T_A = 25°C, unless otherwise noted.

Symbol	Parameter	Test Conditions	Min	Typ	Max	Unit
V_{IN} = 5.5 V						
t_{ON}	Turn-on time	C_L = 0.1 µF, R_L = 10 Ω		2200		µs
t_{OFF}	Turn-off time	C_L = 0.1 µF, R_L = 10 Ω		2.8		
t_R	V_{OUT} rise time	C_L = 0.1 µF, R_L = 10 Ω		1700		
t_F	V_{OUT} fall time	C_L = 0.1 µF, R_L = 10 Ω		2.5		
t_D	EN delay time	C_L = 0.1 µF, R_L = 10 Ω		700		
V_{IN} = 3.6 V						
t_{ON}	Turn-on time	C_L = 0.1 µF, R_L = 10 Ω		2600		µs
t_{OFF}	Turn-off time	C_L = 0.1 µF, R_L = 10 Ω		2.4		
t_R	V_{OUT} rise time	C_L = 0.1 µF, R_L = 10 Ω		1700		
t_F	V_{OUT} fall time	C_L = 0.1 µF, R_L = 10 Ω		2.5		
t_D	EN delay time	C_L = 0.1 µF, R_L = 10 Ω		900		
V_{IN} = 1.8 V						
t_{ON}	Turn-on time	C_L = 0.1 µF, R_L = 10 Ω		2000		µs
t_{OFF}	Turn-off time	C_L = 0.1 µF, R_L = 10 Ω		3		
t_R	V_{OUT} rise time	C_L = 0.1 µF, R_L = 10 Ω		1100		
t_F	V_{OUT} fall time	C_L = 0.1 µF, R_L = 10 Ω		2.5		
t_D	EN delay time	C_L = 0.1 µF R_L = 10 Ω		900		
V_{IN} = 0.75 V						
t_{ON}	Turn-on time	C_L = 0.1 µF, R_L = 10 Ω		1500		µs
t_{OFF}	Turn-off time	C_L = 0.1 µF, R_L = 10 Ω		20		
t_R	V_{OUT} rise Time	C_L = 0.1 µF, R_L = 10 Ω		700		
t_F	V_{OUT} fall time	C_L = 0.1 µF, R_L = 10 Ω		5		
t_D	EN delay time	C_L = 0.1 µF, R_L = 10 Ω		900		

Note:

(1) Specifications subject to change without notice.

© 2024 DIOO MICROCIRCUITS CO., LTD

Typical Performance Application

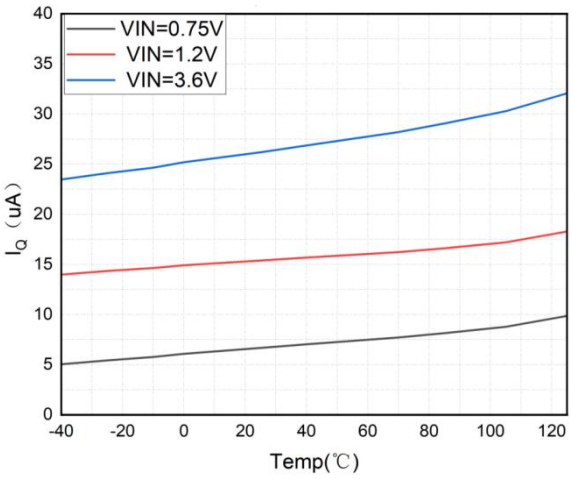

Figure 3. I_Q vs. Temperature

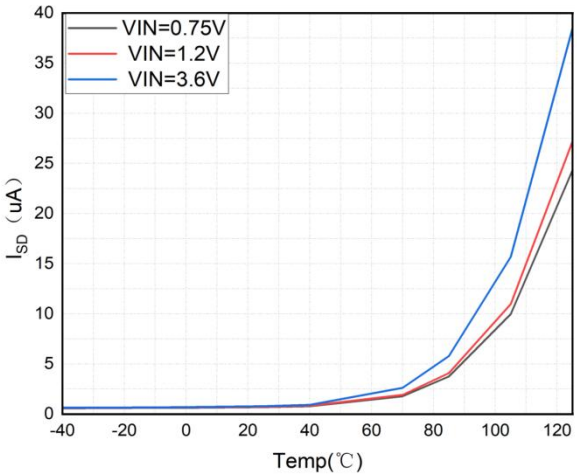

Figure 4. I_{SD} vs. Temperature

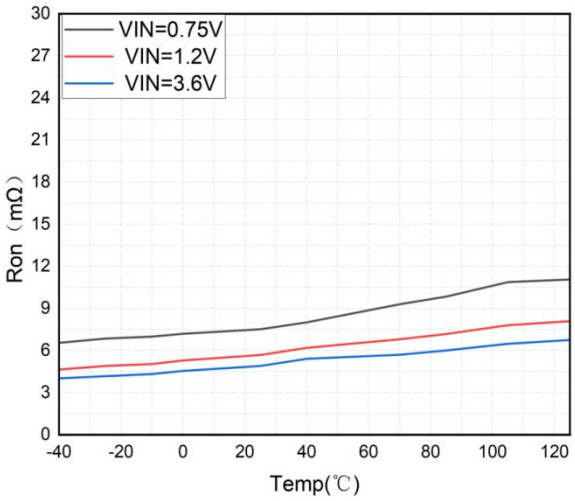

load current = 200 mA

Figure 5. R_{ON} vs. Temperature

© 2024 DIOO MICROCIRCUITS CO., LTD

Block Diagram

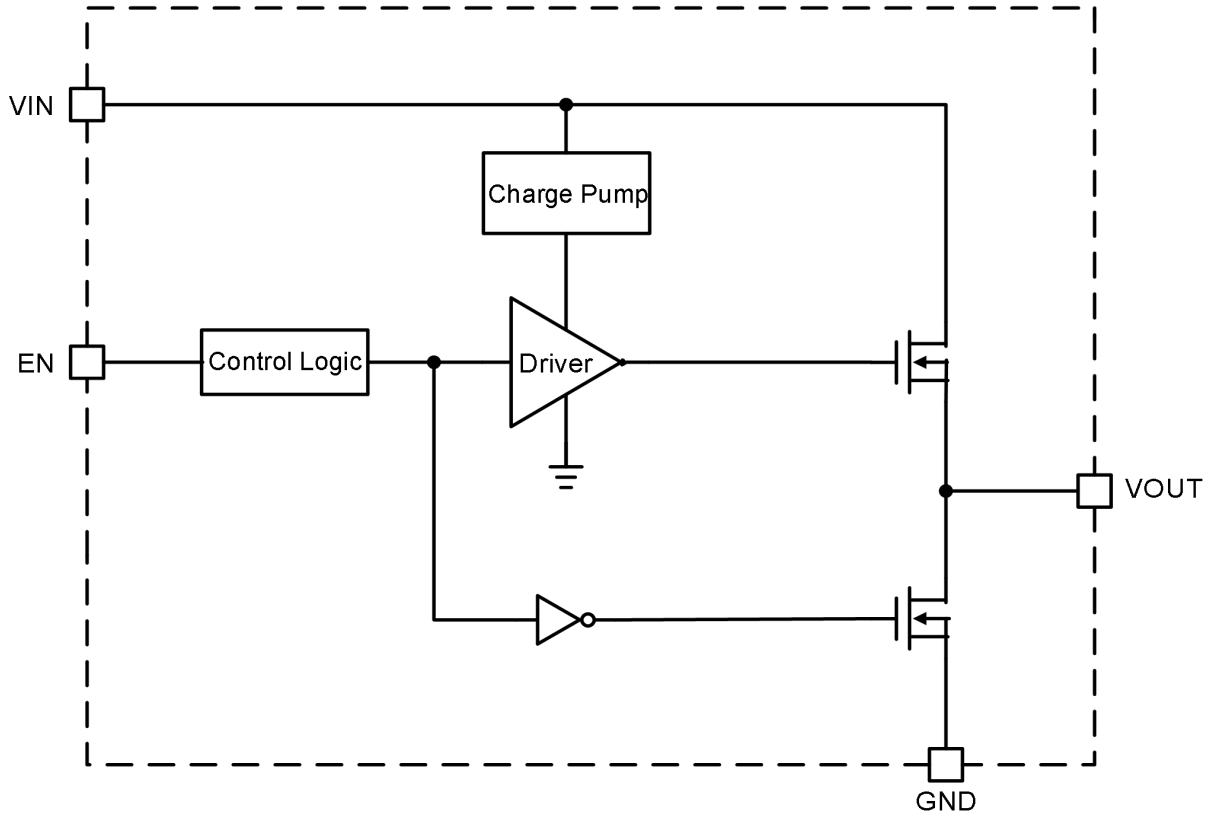

Figure 6. Block diagram

Feature Description

Overview

The DIO7970S is a single channel 4 A load switch in a small, space-saving WLCSP-8 package. This device contains a controlled rise time with a low resistance N-channel MOSFET to limit the inrush current for certain needs.

The DIO7970S is designed to have very low leakage current during OFF state to avoid downstream circuits from pulling high standby current from the supply. The need for additional external components is eliminated by integrated control logic, driver, power supply, and output pulldown FET, which reduces solution size and bill of materials (BOM) count.

On and off control

The state of the switch is controlled by the EN pin, by asserting EN high can enable the switch. EN can interface with low-voltage signals for its low threshold. The EN pin is compatible with any microcontroller with 1.2 V, 1.8 V, 2.5 V, 3.3 V or 5.5 V GPIOs. This pin cannot be left floating for proper functionality for it does not have an internal bias.

Output pulldown resistor (R_{PD})

The DIO7970S has a R_{PD} feature included. An output pulldown resistor is connected between VOUT and GND when the switch is disabled, this resistor prevents the output from floating while the switch is disabled and has a typical value of 150 Ω.

© 2024 DIOO MICROCIRCUITS CO., LTD

Device functional modes

Functional Table lists the functional modes for the DIO7970S.

Functional table

DIO7970S		
EN Pin	**V_{IN} to V_{OUT}**	**V_{OUT} to GND**
Below V_{IL}	OFF	ON
Above V_{IH}	ON	OFF

Parameter measurement information

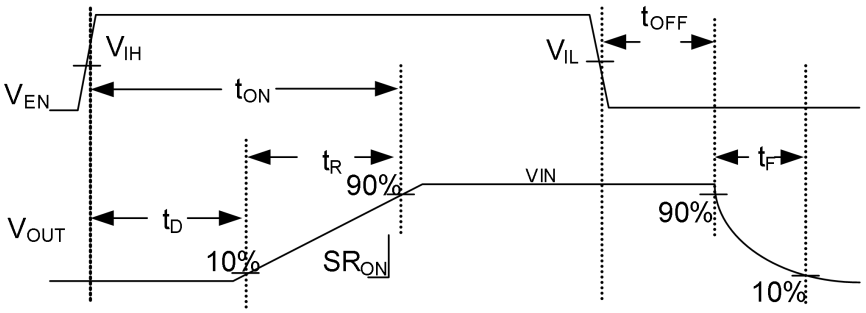

Figure 7. t_{ON} and t_{OFF} waveforms

Applications Information

Typical applications

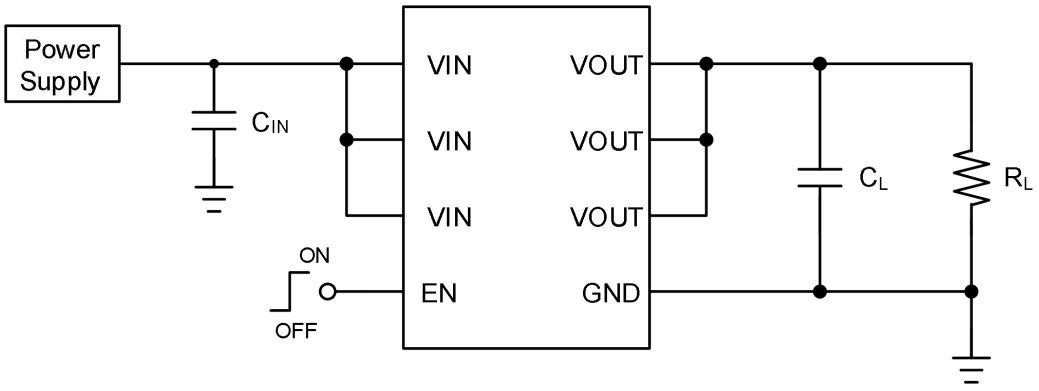

Figure 8. Typical applications

Thermal consideration

Limiting the junction temperature (T_J) below 125°C is recommended. Use Equation (1) as a guideline to calculate the maximum allowable dissipation, $P_{D(max)}$ for a given output current and ambient temperature.

$$P_{D(MAX)} = \frac{T_{J(max)} - T_A}{\theta_{JA}} \quad (1)$$

© 2024 DIOO MICROCIRCUITS CO., LTD

where

- $P_{D(max)}$ is maximum allowable power dissipation
- $T_{J(max)}$ is maximum allowable junction temperature
- T_A is ambient temperature of the device
- θ_{JA} is junction to air thermal impedance. See the Absolute Maximum Ratings section. This parameter is highly dependent upon board layout

Design requirements

For this design example, use the input parameters shown in the table below.

Design Parameter	Example Value
V_{IN}	0.75 V to 5.5 V
I_{LOAD}	10 mA
Load capacitance	940 µF
Maximum voltage drop	1%
Maximum inrush current	1.82 A

Maximum voltage drop and on-resistance

The DIO7970S has a typical R_{ON} of 4.9 mΩ at 3.6 V input voltage, with a maximum voltage drop tolerance of 1%. The rail is supplying 10 mA of current; the voltage drop for a rail is calculated based on Equation (2) and Equation (3):

$$\Delta V = R_{ON} \times I_{LOAD} \quad (2)$$

$$\Delta V = 0.049\ mV \quad (3)$$

The maximum voltage drop is 1% which is 36 mV. The voltage drop caused by the load current across the on resistance is 0.049 mV.

Managing inrush current

The output capacitors must be charged up from 0 V to V_{IN} when the switch is enabled. This charge arrives in the form of inrush current. Inrush current may be calculated using Equation (4).

$$I_{INRUSH} = C_L \times S_R = \frac{C_L \times 0.8 \times V_{IN}}{t_R} \quad (4)$$

where

- I_{INRUSH} is the inrush current
- C_L is the load capacitance
- S_R is the output slew rate
- V_{IN} is the input voltage
- t_R is the rise time

Power supply recommendations

The DIO7970S is designed to operate from a V_{IN} range of 0.75 V to 5.5 V. The V_{IN} power supply must be well regulated and placed as close to the device terminal as possible and must be able to withstand all transient load

© 2024 DIOO MICROCIRCUITS CO., LTD

current steps. Normally, using an input capacitance of 1 µF is sufficient to prevent the supply voltage from dipping when the switch is turned on. Additional bulk capacitance may be required on the input in cases where the power supply is slow to respond to a large transient current or large load current step.

Layout

All traces should be as short as possible for best performance. To be most effective, the input and output capacitors should be placed close to the DIO7970S to minimize the effects that parasitic trace inductances may have on normal and short circuit operation. Using wide traces for VIN, VOUT, and GND helps minimize the parasitic electrical effects along with minimizing the case to ambient thermal impedance.

© 2024 DIOO MICROCIRCUITS CO., LTD

Physical Dimensions: WLCSP-8

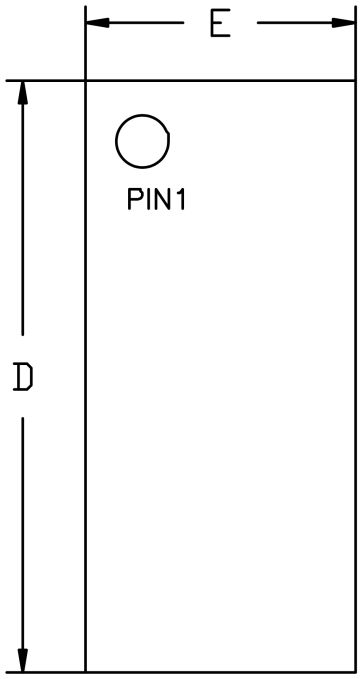

TOP VIEW
(MARK SIDE)

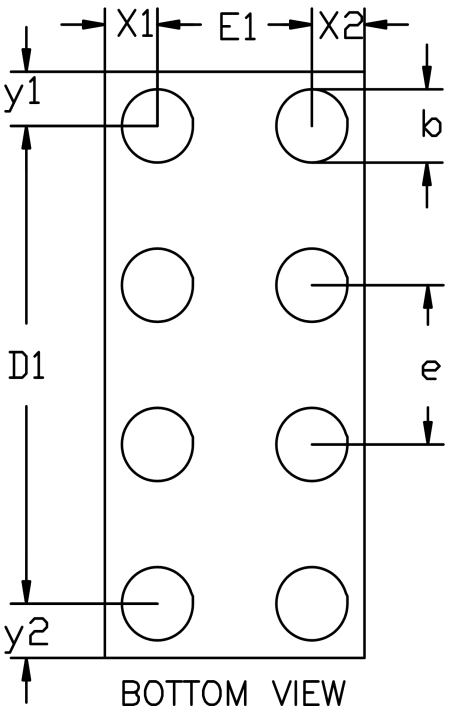

BOTTOM VIEW
(BALL SIDE)

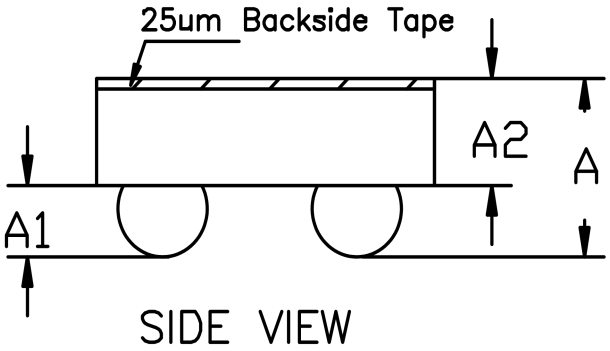

SIDE VIEW

Common Dimensions (Units of measure = Millimeter)			
Symbol	**Min**	**Nom**	**Max**
A	0.385	0.425	0.465
A1	0.150	0.170	0.190
A2	0.235	0.255	0.275
D	1.810	1.840	1.870
D1	1.500 BSC		
E	0.810	0.840	0.870
E1	0.500 BSC		
b	0.210	0.230	0.250
e	0.500 BSC		
x1	0.170 REF		
x2	0.170 REF		
y1	0.170 REF		
Y2	0.170 REF		

© 2024 DIOO MICROCIRCUITS CO., LTD

CONTACT US

Dioo is a professional design and sales corporation for high-quality and performance analog semiconductors. The company focuses on industry markets, such as cell phones, handheld products, laptops, medical equipment, and so on. Dioo's product families include analog signal processing and amplifying, LED drivers, and charger ICs. Go to http://www.dioo.com for a complete list of Dioo product families.

For additional product information or full datasheet, please contact our sales department or representatives.

© 2024 DIOO MICROCIRCUITS CO., LTD