DIO7982
Ultra-Low Quiescent Current, 150 mA CMOS LDO Regulator

Features

- Operating input voltage range: 1.8 V to 5.5 V
- Output voltage range: 1.2 V to 3.6 V
- Ultra-low quiescent current : 0.5 μA (typ.)
- Low dropout:
  170 mV (typ.) at V_{OUT} = 3.3 V, I_{OUT} = 150 mA
- High output voltage accuracy ±1%
- Stable with ceramic capacitors 1 μF
- Over-current protection
- Thermal shutdown protection
- Quick output discharge
  DIO7982A: available
  DIO7982B: not available
- Available in small DFN1*1-4, DFN0.8*0.8-4 and SOT23-5 packages
- These devices are Pb−free, halogen-free/BFR free and are RoHS compliant

Descriptions

The DIO7982 series of CMOS low dropout regulators is designed specifically for portable battery-powered applications which require ultra-low quiescent current. The ultra-low consumption of a typical 500 nA ensures long battery life and dynamic transient boost feature improves device transient response for wireless communication applications. The device is available in DFN1*1-4, DFN0.8*0.8-4 and SOT23-5 packages.

Applications

- Battery powered equipment
- Portable communication equipment
- Cameras, image sensors and camcorders

Typical Applications

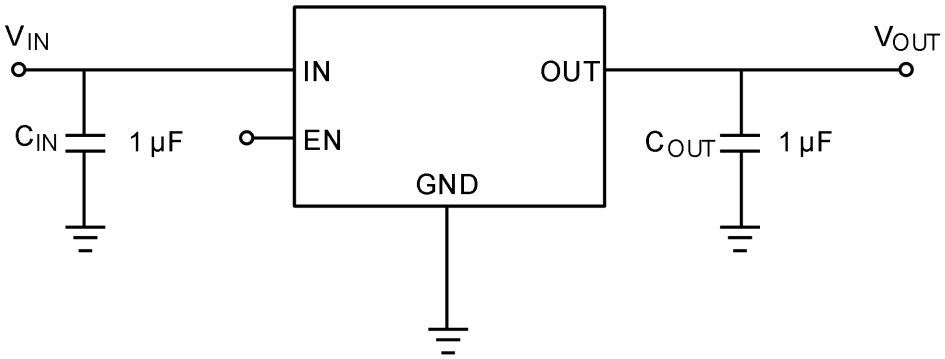

© 2023 DIOO MICROCIRCUITS CO., LTD

Ordering Information

Ordering Part No.	Top Marking	MSL	Description	RoHS	T_A	Package	
DIO7982AaaST5	DAXYW	3	Active discharge	Green	-40 to 85°C	SOT23-5	Tape & Reel, 3000
DIO7982AaaEN4	WX	1		Green	-40 to 85°C	DFN1*1-4	Tape & Reel,10000
DIO7982AaaCN4	C	1		Green	-40 to 85°C	DFN0.8*0.8-4	Tape & Reel, 5000
DIO7982BaaST5	DBXYW	3	Non-active discharge	Green	-40 to 85°C	SOT23-5	Tape & Reel, 3000
DIO7982BaaEN4	YW2X	1		Green	-40 to 85°C	DFN1*1-4	Tape & Reel,10000
DIO7982BaaCN4	C	1		Green	-40 to 85°C	DFN0.8*0.8-4	Tape & Reel, 5000

Output Voltage Options								
Option Code "**aa**"	**12**	**15**	**18**	**25**	**28**	**30**	**33**	**36**
Voltage	1.2 V	1.5 V	1.8 V	2.5 V	2.8 V	3 V	3.3 V	3.6 V

Marking Definition: DAXYW / WX / DBXYW / YW2X / C	
DAXYW	DA: product code; Y: year code; W: week code
WX	W: week code
C	C: product code
DBXYW	DB: product code; Y: year code; W: week code
YW2X	Y: year code; W: week code; 2: product code

Voltage Code								
Option Code "X"	F	G	H	J	K	M	N	P
Voltage	1.2 V	1.5 V	1.8 V	2.5 V	2.8 V	3 V	3.3 V	3.6 V

© 2023 DIOO MICROCIRCUITS CO., LTD

Pin Assignments

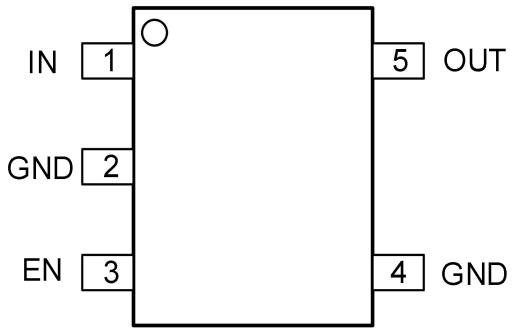

SOT23-5

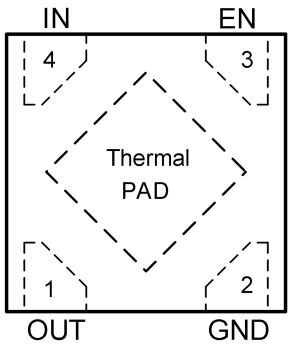

DFN1*1-4

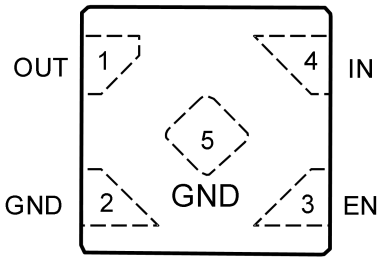

DFN0.8*0.8-4

Figure 1. Pin Assignment (Top view)

Pin Definitions

Pin Name	Description
OUT	Output voltage pin.
EN	Enable pin. This pin has an internal pull-down current source. Connect to logic “High” for normal operation.
GND	Power supply ground.
IN	Input voltage pin.

© 2023 DIOO MICROCIRCUITS CO., LTD

Absolute Maximum Ratings

Stresses beyond those listed under the Absolute Maximum Rating table may cause permanent damage to the device. These are stress ratings only and functional operation of the device at these or any other condition beyond those indicated in the operational sections of the specifications is not implied. Exposure to absolute maximum rating conditions for extended periods may affect device reliability.

Symbol	Parameter		Rating	Unit
V_{IN}	Input voltage		6.0	V
V_{OUT}	Output voltage		-0.3 to V_{IN} + 0.3	V
V_{EN}	Chip enable input		-0.3 to 6.0	V
$T_{J(MAX)}$	Maximum junction temperature		150	°C
T_{STG}	Storage temperature		-55 to 150	°C
$R_{\theta JA}$	Junction-to-ambient thermal resistance	DFN0.8*0.8-4	400	°C/W
		DFN1*1-4	250	
		SOT23-5	235	
ESD	Electrostatic discharge	HBM	±8000	V

Recommend Operating Conditions

The Recommended Operating Conditions table defines the conditions for actual device operation. Recommended operating conditions are specified to ensure optimal performance to the datasheet specifications. DIOO does not recommend exceeding them or designing to Absolute Maximum Ratings.

Symbol	Parameter	Min	Max	Unit
V_{IN}	Operating input voltage	1.8	5.5	V
V_{EN}	Enable input voltage	0	5.5	V
T_A	Ambient temperature	-40	85	°C

© 2023 DIOO MICROCIRCUITS CO., LTD

Electrical Characteristics – Voltage Version 1.2 V

V_{IN} = 2.5 V, I_{OUT} = 1 mA, C_{IN} = C_{OUT} = 1.0 µF, -40°C ≤ T_A ≤ 85°C, typical values are at T_A = 25°C, unless otherwise specified.

Symbol	Parameter	Test Conditions		Min	Typ	Max	Unit
V_{IN}	Operating input voltage			1.8		5.5	V
V_{OUT}	Output voltage	T_A = 25°C		1.188	1.2	1.212	V
$Line_{Reg}$	Line regulation	2.5 V < V_{IN} ≤ 5.5 V, I_{OUT} = 1 mA, T_A = 25°C				6	mV
$Load_{Reg}$	Load regulation	0 mA < I_{OUT} ≤ 150 mA, V_{IN} = 2.5 V, T_A = 25°C		-20	8	20	mV
$Line_{Res}$	Line transient response	V_{IN} step from 2.5 V to 5.5 V, I_L = 10 mA			50		mV
$Load_{Res}$	Load transient response	V_{IN} = 2.5 V, I_{OUT} step from 1 mA to 50 mA			120		mV
I_{OUT}	Output current			150			mA
I_{SC}	Short circuit current limit	V_{OUT} = 0 V			130		mA
I_Q	Quiescent current	I_{OUT} = 0 mA, T_A = 25°C			0.5	0.9	µA
I_{STB}	Standby current	V_{EN} = 0 V, T_A = 25°C			0.1	0.5	µA
V_{ENH}	EN pin threshold voltage	EN input voltage “H”		1.0			V
V_{ENL}	EN pin threshold voltage	EN input voltage “L”				0.4	V
I_{EN}	EN pin current	V_{EN} ≤ V_{IN} ≤ 5.5 V			10		nA
PSRR	Power supply rejection ratio	f = 1 kHz, V_{IN} = 2.5 V + 200 mV_{PP} modulation	I_{OUT} = 150 mA		57		dB
			I_{OUT} = 10 mA		63		dB
V_{NOISE}	Output noise voltage	V_{IN} = 5.5 V, I_{OUT} = 1 mA, f = 100 Hz to 1 MHz, C_{OUT} = 1 µF			85		µVrms
R_{LOW}	Active output discharge resistance	V_{IN} = 5.5 V, V_{EN} = 0 V (DIO7982A only)			100		Ω
T_{SD}	Thermal shutdown temperature	Temperature increasing from T_A = 25°C			160		°C
T_{SDH}	Thermal shutdown hysteresis	Temperature falling from T_{SD}			25		°C
T_C	Output voltage temperature coefficient	I_{OUT} = 1 mA			45		ppm/°C
t_{ON}	Turn ON time	V_{IN} = 2.5 V, C_{OUT} = 1 µF			480		µs
t_{OFF}	Turn OFF time	V_{IN} = 2.5 V, C_{OUT} = 1 µF			300		µs
$t_{D(ON)}$	Turn ON delay time	V_{IN} = 2.5 V, C_{OUT} = 1 µF			300		µs

© 2023 DIOO MICROCIRCUITS CO., LTD

Electrical Characteristics – Voltage Version 1.5 V

V_{IN} = 2.5 V, I_{OUT} = 1 mA, C_{IN} = C_{OUT} = 1.0 µF, -40°C ≤ T_A ≤ 85°C, typical values are at T_A = 25°C, unless otherwise specified.

Symbol	Parameter	Test Conditions	Min	Typ	Max	Unit
V_{IN}	Operating input voltage		1.8		5.5	V
V_{OUT}	Output voltage	T_A = 25°C	1.485	1.5	1.515	V
$Line_{Reg}$	Line regulation	2.5 V < V_{IN} ≤ 5.5 V, I_{OUT} = 1 mA, T_A = 25°C			6	mV
$Load_{Reg}$	Load regulation	0 mA < I_{OUT} ≤ 150 mA, V_{IN} = 2.5 V, T_A = 25°C	-20	8	20	mV
$Line_{Res}$	Line transient response	V_{IN} step from 2.5 V to 5.5 V, I_L = 10 mA		50		mV
$Load_{Res}$	Load transient response	V_{IN} = 2.5 V, I_{OUT} step from 1 mA to 50 mA		120		mV
V_{DO}	Dropout voltage	I_{OUT} = 150 mA		370		mV
I_{OUT}	Output current		150			mA
I_{SC}	Short circuit current limit	V_{OUT} = 0 V		130		mA
I_Q	Quiescent current	I_{OUT} = 0 mA, T_A = 25°C		0.5	0.9	µA
I_{STB}	Standby current	V_{EN} = 0 V, T_A = 25°C		0.1	0.5	µA
V_{ENH}	EN pin threshold voltage	EN input voltage “H”	1.0			V
V_{ENL}	EN pin threshold voltage	EN input voltage “L”			0.4	V
I_{EN}	EN pin current	V_{EN} ≤ V_{IN} ≤ 5.5 V		10		nA
PSRR	Power supply rejection ratio	f =1kHz, V_{IN} = 2.5 V + 200 mVpp modulation; I_{OUT} = 150 mA		57		dB
		f =1kHz, V_{IN} = 2.5 V + 200 mVpp modulation; I_{OUT} = 10 mA		63		dB
V_{NOISE}	Output noise voltage	V_{IN} = 5.5 V, I_{OUT} = 1 mA, f = 100 Hz to 1 MHz, C_{OUT} = 1 µF		85		µVrms
R_{LOW}	Active output discharge resistance	V_{IN} = 5.5 V, V_{EN} = 0 V (DIO7982A only)		100		Ω
T_{SD}	Thermal shutdown temperature	Temperature increasing from T_A = 25°C		160		°C
T_{SDH}	Thermal shutdown hysteresis	Temperature falling from T_{SD}		25		°C
T_C	Output voltage temperature coefficient	I_{OUT} = 1 mA		45		ppm/°C
t_{ON}	Turn ON time	V_{IN} = 2.5 V, C_{OUT} = 1 µF		670		µs
t_{OFF}	Turn OFF time	V_{IN} = 2.5 V, C_{OUT} = 1 µF		300		µs
$t_{D(ON)}$	Turn ON delay time	V_{IN} = 2.5 V, C_{OUT} = 1 µF		300		µs

© 2023 DIOO MICROCIRCUITS CO., LTD

Electrical Characteristics – Voltage Version 1.8 V

V_{IN} = 2.8 V, I_{OUT} = 1 mA, C_{IN} = C_{OUT} = 1.0 µF, -40°C ≤ T_A ≤ 85°C, typical values are at T_A = 25°C, unless otherwise specified.

Symbol	Parameter	Test Conditions	Min	Typ	Max	Unit
V_{IN}	Operating input voltage		1.8		5.5	V
V_{OUT}	Output voltage	T_A = 25°C	1.782	1.8	1.818	V
$Line_{Reg}$	Line regulation	2.8 V < V_{IN} ≤ 5.5 V, I_{OUT} = 1 mA, T_A = 25°C			6	mV
$Load_{Reg}$	Load regulation	0 mA < I_{OUT} ≤ 150 mA, V_{IN} = 2.8 V, T_A = 25°C	-20	8	20	mV
$Line_{Res}$	Line transient response	V_{IN} step from 2.8 V to 5.5 V, I_L = 10 mA		50		mV
$Load_{Res}$	Load transient response	V_{IN} = 2.8 V, I_{OUT} step from 1 mA to 50 mA		100		mV
V_{DO}	Dropout voltage	I_{OUT} = 150 mA		280	360	mV
I_{OUT}	Output current		150			mA
I_{SC}	Short circuit current limit	V_{OUT} = 0 V		130		mA
I_Q	Quiescent current	I_{OUT} = 0 mA, T_A = 25°C		0.5	0.9	µA
I_{STB}	Standby current	V_{EN} = 0 V, T_A = 25°C		0.1	0.5	µA
V_{ENH}	EN pin threshold voltage	EN input voltage “H”	1.0			V
V_{ENL}	EN pin threshold voltage	EN input voltage “L”			0.4	V
I_{EN}	EN pin current	V_{EN} ≤ V_{IN} ≤ 5.5 V		10		nA
PSRR	Power supply rejection ratio	f =1 kHz, V_{IN} = 2.8 V + 200 mVpp modulation, I_{OUT} = 150 mA		57		dB
		f =1 kHz, V_{IN} = 2.8 V + 200 mVpp modulation, I_{OUT} = 10 mA		63		dB
V_{NOISE}	Output noise voltage	V_{IN} = 5.5 V, I_{OUT} = 1 mA, f = 100 Hz to 1 MHz, C_{OUT} = 1 µF		95		µVrms
R_{LOW}	Active output discharge resistance	V_{IN} = 5.5 V, V_{EN} = 0 V (DIO7982A only)		100		Ω
T_{SD}	Thermal shutdown temperature	Temperature increasing from T_A = 25°C		160		°C
T_{SDH}	Thermal shutdown hysteresis	Temperature falling from T_{SD}		25		°C
T_C	Output voltage temperature coefficient	I_{OUT} = 1 mA		50		ppm/°C
t_{ON}	Turn ON time	V_{IN} = 2.8 V, C_{OUT} = 1 µF		770		µs
t_{OFF}	Turn OFF time	V_{IN} = 2.8 V, C_{OUT} = 1 µF		300		µs
$t_{D(ON)}$	Turn ON delay time	V_{IN} = 2.8 V, C_{OUT} = 1 µF		300		µs

© 2023 DIOO MICROCIRCUITS CO., LTD

Electrical Characteristics – Voltage Version 3.0 V

V_{IN} = 4 V, I_{OUT} = 1 mA, C_{IN} = C_{OUT} = 1.0 µF, -40°C ≤ T_A ≤ 85°C, typical values are at T_A = 25°C, unless otherwise specified.

Symbol	Parameter	Test Conditions	Min	Typ	Max	Unit
V_{IN}	Operating input voltage		1.8		5.5	V
V_{OUT}	Output voltage	T_A = 25°C	2.97	3.0	3.03	V
$Line_{Reg}$	Line regulation	4 V < V_{IN} ≤ 5.5 V, I_{OUT} = 1 mA, T_A = 25°C			6	mV
$Load_{Reg}$	Load regulation	0 mA < I_{OUT} ≤ 150 mA,V_{IN} = 4 V, T_A = 25°C	-20	8	20	mV
$Line_{Res}$	Line transient response	V_{IN} step from 4 V to 5.5 V, I_L = 10 mA		50		mV
$Load_{Res}$	Load transient response	V_{IN} = 4 V, I_{OUT} step from 1 mA to 50 mA		120		mV
V_{DO}	Dropout voltage	I_{OUT} = 150 mA		175	215	mV
I_{OUT}	Output current		150			mA
I_{SC}	Short circuit current limit	V_{OUT} = 0 V		130		mA
I_Q	Quiescent current	I_{OUT} = 0 mA,T_A = 25°C		0.5	0.9	µA
I_{STB}	Standby current	V_{EN} = 0 V, T_A = 25°C		0.1	0.5	µA
V_{ENH}	EN pin threshold voltage	EN input voltage “H”	1.0			V
V_{ENL}	EN pin threshold voltage	EN input voltage “L”			0.4	V
I_{EN}	EN pin current	V_{EN} ≤ V_{IN} ≤ 5.5 V		10		nA
PSRR	Power supply rejection ratio	f =1 kHz, V_{IN} = 4 V + 200 mV_{PP} modulation, I_{OUT} = 150 mA		54		dB
		f =1 kHz, V_{IN} = 4 V + 200 mV_{PP} modulation, I_{OUT} = 10 mA		60		dB
V_{NOISE}	Output noise voltage	V_{IN} = 5.5 V, I_{OUT} = 1 mA, f = 100 Hz to 1 MHz, C_{OUT} = 1 µF		100		µVrms
R_{LOW}	Active output discharge resistance	V_{IN} = 5.5 V, V_{EN} = 0 V (DIO7482A)		100		Ω
T_{SD}	Thermal shutdown temperature	Temperature increasing from T_A = 25°C		160		°C
T_{SDH}	Thermal shutdown hysteresis	Temperature falling from T_{SD}		25		°C
T_C	Output voltage temperature coefficient	I_{OUT} = 1 mA		40		ppm/°C
t_{ON}	Turn ON time	V_{IN} = 4 V, C_{OUT} = 1 µF		1400		µs
t_{OFF}	Turn OFF time	V_{IN} = 4 V, C_{OUT} = 1 µF		300		µs
$t_{D(ON)}$	Turn ON delay time	V_{IN} = 4 V, C_{OUT} = 1 µF		300		µs

© 2023 DIOO MICROCIRCUITS CO., LTD

Electrical Characteristics – Voltage Version 3.3 V

V_{IN} = 4.3 V, I_{OUT} = 1 mA, C_{IN} = C_{OUT} = 1.0 µF, -40°C ≤ T_A ≤ 85°C, typical values are at T_A = 25°C, unless otherwise specified.

Symbol	Parameter	Test Conditions		Min	Typ	Max	Unit
V_{IN}	Operating input voltage			1.8		5.5	V
V_{OUT}	Output voltage	T_A = 25°C		3.267	3.3	3.333	V
$Line_{Reg}$	Line regulation	4.3 V < V_{IN} ≤ 5.5 V, I_{OUT} = 1 mA, T_A = 25°C				6	mV
$Load_{Reg}$	Load regulation	0 mA < I_{OUT} ≤ 150 mA,V_{IN} = 4.3 V, T_A = 25°C		-20	8	20	mV
$Line_{Res}$	Line transient response	V_{IN} step from 4.3 V to 5.5 V, I_L = 10 mA			50		mV
$Load_{Res}$	Load transient response	V_{IN} = 4.3 V, I_{OUT} step from 1 mA to 50 mA			150		mV
V_{DO}	Dropout voltage	I_{OUT} = 150 mA			170	205	mV
I_{OUT}	Output current			150			mA
I_{SC}	Short circuit current limit	V_{OUT} = 0 V			130		mA
I_Q	Quiescent current	I_{OUT} = 0 mA,T_A = 25°C			0.5	0.9	µA
I_{STB}	Standby current	V_{EN} = 0 V, T_A = 25°C			0.1	0.5	µA
V_{ENH}	EN pin threshold voltage	EN input voltage “H”		1.0			V
V_{ENL}	EN pin threshold voltage	EN input voltage “L”				0.4	V
I_{EN}	EN pin current	V_{EN} ≤ V_{IN} ≤ 5.5 V			10		nA
PSRR	Power supply rejection ratio	f =1 kHz, V_{IN} = 4.3 V + 200 mV_{PP} modulation	I_{OUT} = 150 mA		54		dB
			I_{OUT} = 10 mA		60		dB
V_{NOISE}	Output noise voltage	V_{IN} = 5.5 V, I_{OUT} = 1 mA, f = 100 Hz to 1 MHz, C_{OUT} = 1 µF			125		µVrms
R_{LOW}	Active output discharge resistance	V_{IN} = 5.5 V, V_{EN} = 0 V (DIO7482A)			100		Ω
T_{SD}	Thermal shutdown temperature	Temperature increasing from T_A = 25°C			160		°C
T_{SDH}	Thermal shutdown hysteresis	Temperature falling from T_{SD}			25		°C
T_C	Output voltage temperature coefficient	I_{OUT} = 1 mA			35		ppm/°C
t_{ON}	Turn ON time	V_{IN} = 4.3 V, C_{OUT} = 1 µF			1600		µs
t_{OFF}	Turn OFF time	V_{IN} = 4.3 V, C_{OUT} = 1 µF			300		µs
$t_{D(ON)}$	Turn ON delay time	V_{IN} = 4.3 V, C_{OUT} = 1 µF			300		µs

Note:

(1) Specifications subject to change without notice.

© 2023 DIOO MICROCIRCUITS CO., LTD

Typical Performance Characteristics

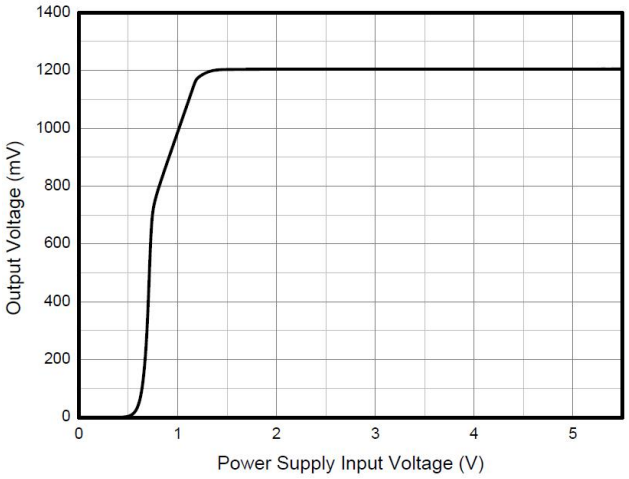

C_{IN} = C_{OUT} = 1 µF, I_{OUT} = 1 mA, V_{OUT} = 1.2 V

Figure 2. Output voltage vs. Input voltage

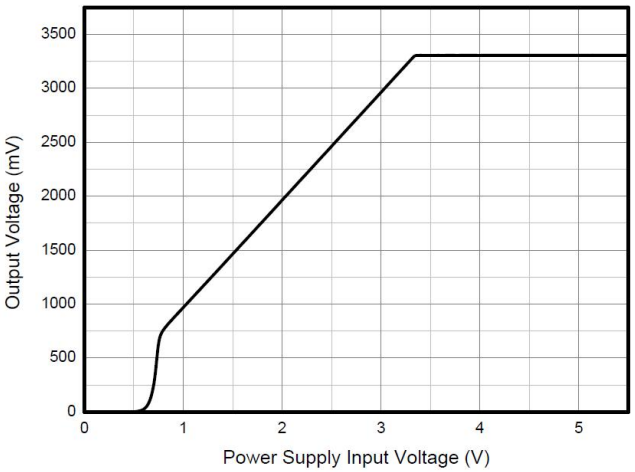

C_{IN} = C_{OUT} = 1 µF, I_{OUT} = 1 mA, V_{OUT} = 3.3 V

Figure 3. Output voltage vs. Input voltage

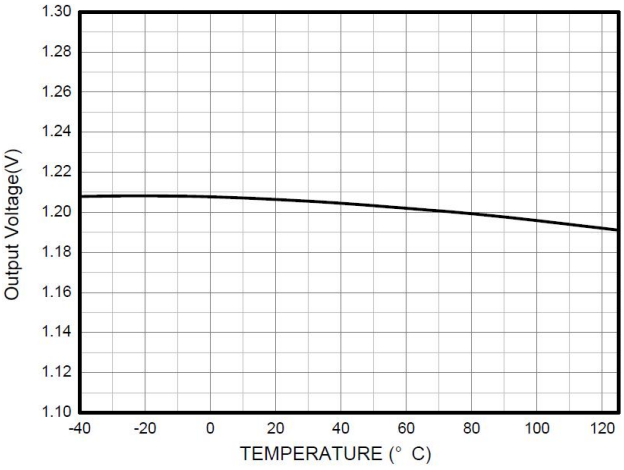

C_{IN} = C_{OUT} = 1 µF, I_{OUT} = 1 mA, V_{OUT} = 1.2 V

Figure 4. Output voltage vs. Temperature

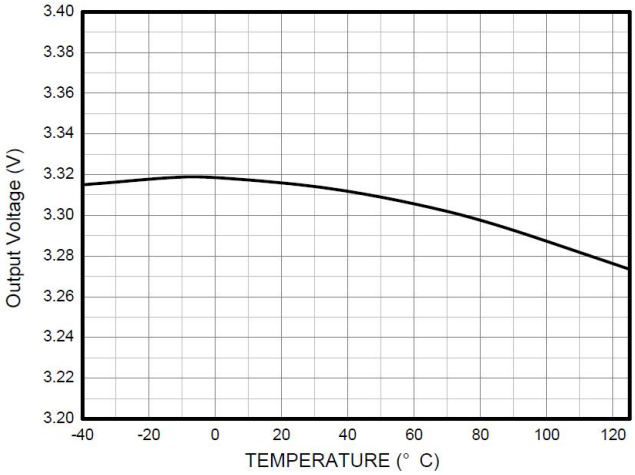

C_{IN} = C_{OUT} = 1 µF, I_{OUT} = 1 mA, V_{OUT} = 3.3 V

Figure 5. Output voltage vs. Temperature

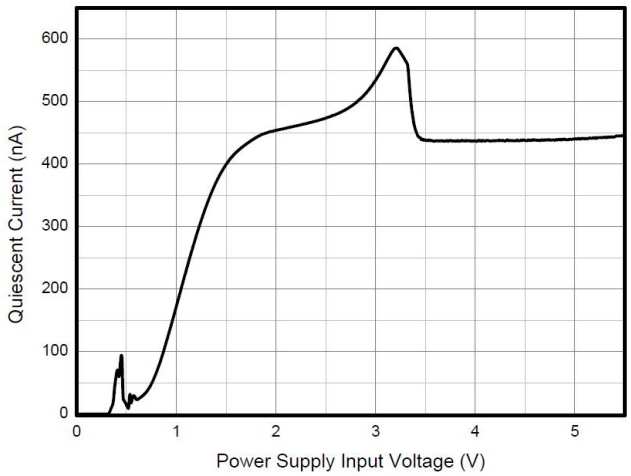

C_{IN} = C_{OUT} = 1 µF, I_{OUT} = 0, V_{OUT} = 3.3 V

Figure 6. Quiescent current vs. Input voltage

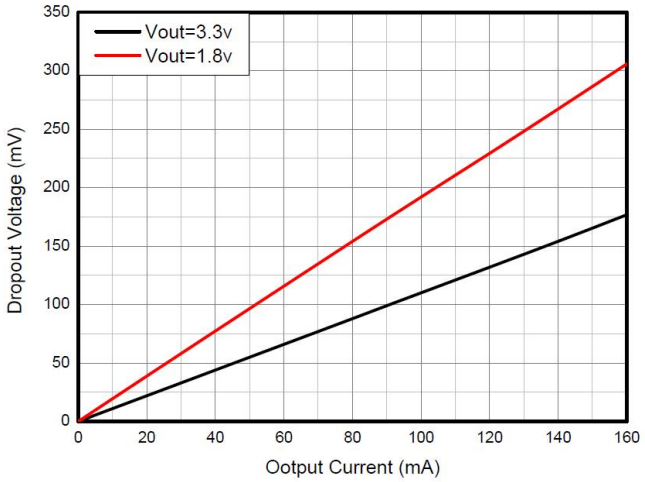

C_{IN} = C_{OUT} = 1 µF

Figure 7. Dropout voltage vs. Output current

© 2023 DIOO MICROCIRCUITS CO., LTD

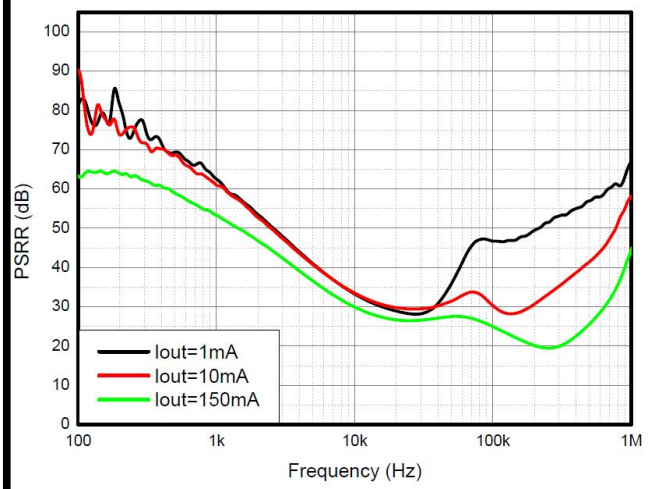

C_{OUT} = 1 µF, V_{IN} = 2.5 V + 200 mVpp, V_{OUT} = 1.2 V

Figure 8. PSRR vs. Frequency

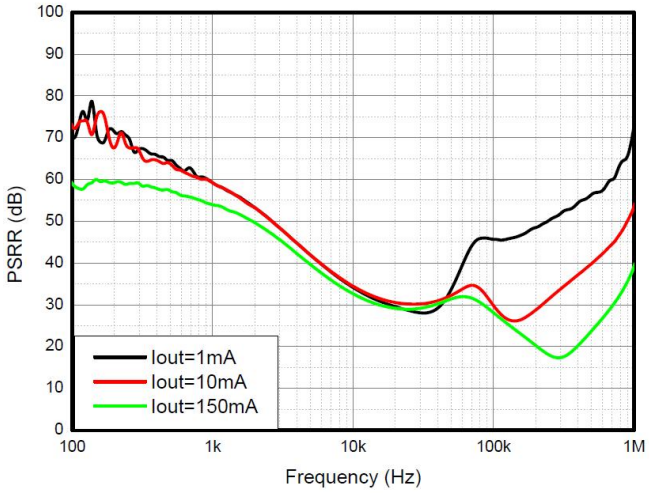

C_{OUT} = 1 µF, V_{IN} = 4.3 V + 200 mVpp, V_{OUT} = 3.3 V

Figure 9. PSRR vs. Frequency

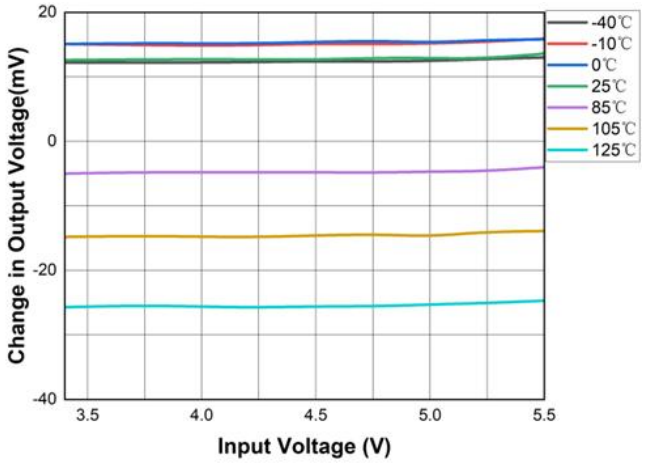

V_{OUT} = 3.3 V, I_{OUT} = 1 mA

Figure 10. Line regulation vs. V_{IN} and Temperature

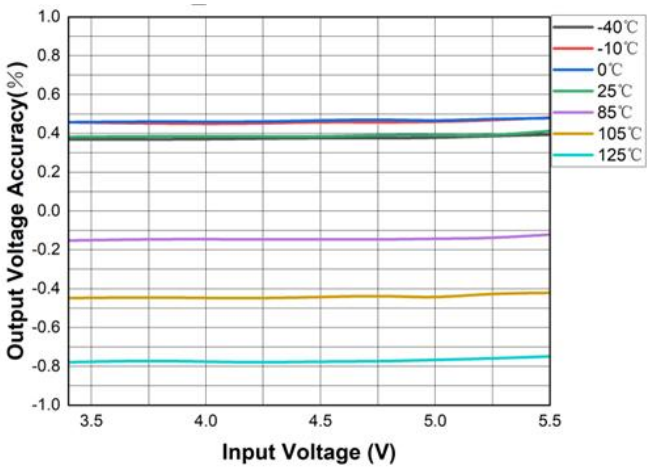

V_{OUT} = 3.3 V, I_{OUT} = 1 mA

Figure 11. Output accuracy vs. V_{IN} and Temperature

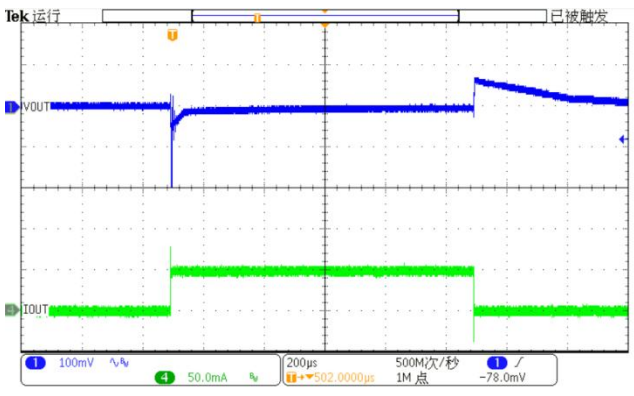

V_{IN} = 5.5 V, V_{OUT} = 3.3 V, C_{IN} = C_{OUT} = 1 µF

Figure 12. Load Transient response at load step from 0.1 mA to 50 mA, V_{OUT} = 3.3 V

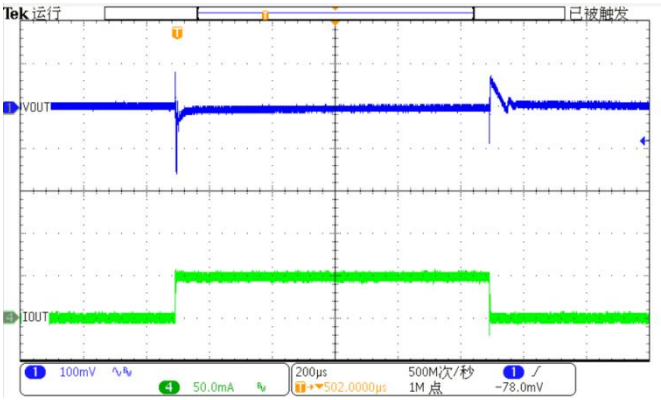

V_{IN} = 5.5 V, V_{OUT} = 3.3 V, C_{IN} = C_{OUT} = 1 µF

Figure 13. Load transient response at load step from 1 mA to 50 mA, V_{OUT} = 3.3 V

© 2023 DIOO MICROCIRCUITS CO., LTD

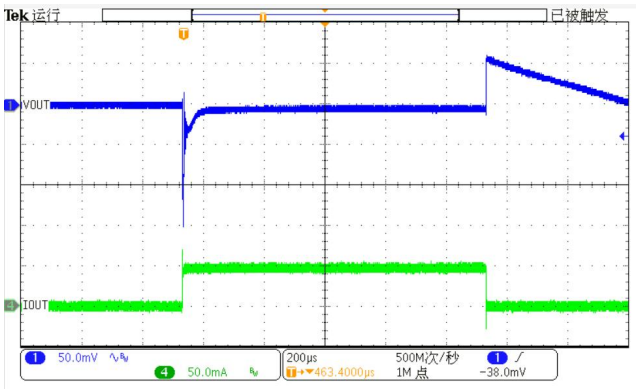

V_{IN} = 5.5 V, V_{OUT} = 1.2 V, C_{IN} = C_{OUT} = 1 µF

Figure 14. Load transient response at load Step from 0.1 mA to 50 mA, V_{OUT} = 1.2 V

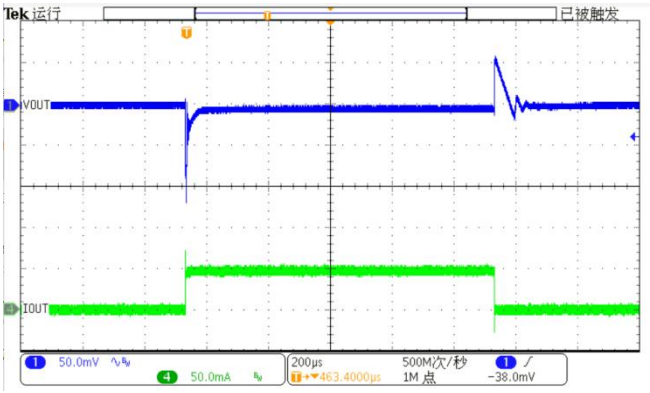

V_{IN} = 5.5 V, V_{OUT} = 1.2 V, C_{IN} = C_{OUT} = 1 µF

Figure 15. Load transient response at load Step from 1 mA to 50 mA, V_{OUT} = 1.2 V

© 2023 DIOO MICROCIRCUITS CO., LTD

Block Diagram

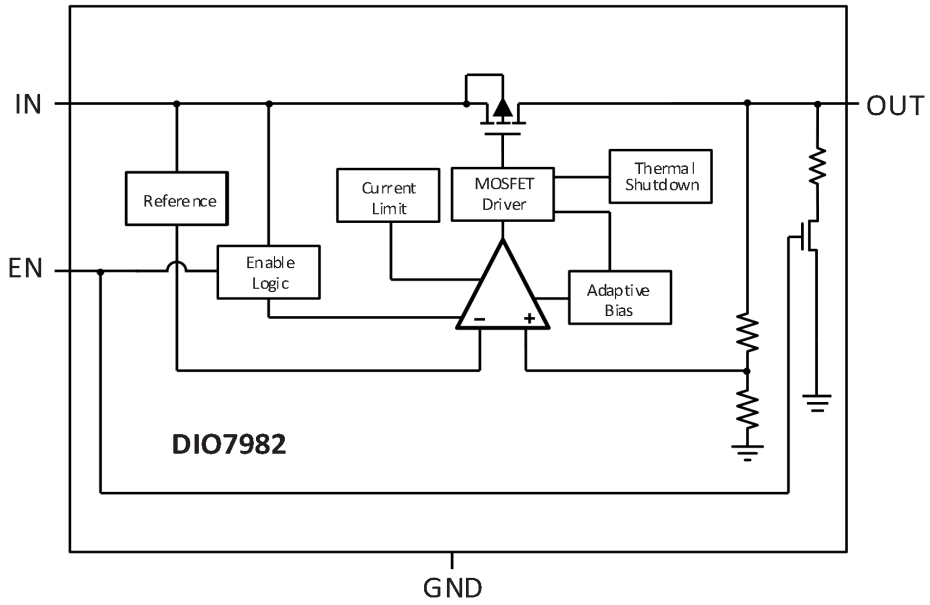

Applications Information

The DIO7982 is a high-performance 150 mA linear regulator with an ultra-low quiescent current. This device delivers low noise and high power supply rejection ratio with excellent dynamic performance due to employing the dynamic quiescent current adjustment, which assures ultra-low quiescent current consumption at a no-load state. These parameters make this device very suitable for various battery-powered applications.

Input Decoupling (C_{IN})

It is recommended to connect at least a 1 μF ceramic X5R or X7R capacitor between IN and GND pins of the device. This capacitor will provide a low impedance path for any unwanted AC signals or noise superimposed onto constant input voltage. A good input capacitor will limit the influence of input trace inductance and source resistance during sudden load current changes.

Higher capacitance and lower ESR capacitors will improve the overall line transient response.

Output Decoupling (C_{OUT})

The DIO7982 does not require a minimum Equivalent Series Resistance (ESR) for the output capacitor. The device is designed to be stable with standard ceramics capacitors with values of 1.0 μF to 10 μF. The X5R and X7R types have the lowest capacitance variations over temperature thus they are recommended. Connect the output capacitor as close as possible to the output pin of the regulator.

© 2023 DIOO MICROCIRCUITS CO., LTD

Enable Operation

The DIO7982A uses the EN pin to enable/disable its device and to activate/deactivate the active discharge function at devices with this feature. If the EN pin voltage is pulled below 0.4 V the device is guaranteed to be disabled. The active discharge transistor at the devices with an active discharge feature is activated and the output voltage V_{OUT} is pulled to GND through an internal circuitry with an effective resistance of about 100 Ω.

If the EN pin voltage is higher than 1.0 V, the device is guaranteed to be enabled. The internal active discharge circuitry is switched off and the desired output voltage is available at the output pin. When the enable function is not required, the EN pin should be connected directly to the input pin.

Thermal Shutdown

When the die temperature exceeds the thermal shutdown point (T_{SD} = 160°C typical), the device goes to the disabled state and the output voltage is not delivered until the die temperature decrease to 135°C. The thermal shutdown feature protects from a catastrophic device failure at accidental overheating. This protection is not intended to be used as a substitute for proper heat sinking.

Power Dissipation and Heat Sinking

The maximum power dissipation supported by the device is dependent upon board design and layout. Mounting pad configuration on the PCB, the board material, and the ambient temperature affect the rate of junction temperature rise for the part. The maximum power dissipation the DIO7982 device can handle is given by Equation (1).

$$P_{D(MAX)} = \frac{[T_{J(MAX)} - T_A]}{R_{\theta JA}} \quad (1)$$

The power dissipated by the DIO7982 device for given application conditions can be calculated from the Equation (2) and Equation (3).

$$P_D \approx V_{IN} \times I_{GND} + I_{OUT} \times (V_{IN} - V_{OUT}) \quad (2)$$

Or

$$V_{IN(MAX)} \approx \frac{P_{D(MAX)} + (V_{OUT} \times I_{OUT})}{I_{OUT} + I_{GND}} \quad (3)$$

Hints

V_{IN} and GND printed circuit board traces should be as wide as possible. When the impedance of these traces is high, there is a chance to pick up noise or cause the regulator to malfunction. Place external components, especially the output capacitor, as close as possible to the DIO7982, and make traces as short as possible.

© 2023 DIOO MICROCIRCUITS CO., LTD

Physical Dimensions: DFN 1*1-4

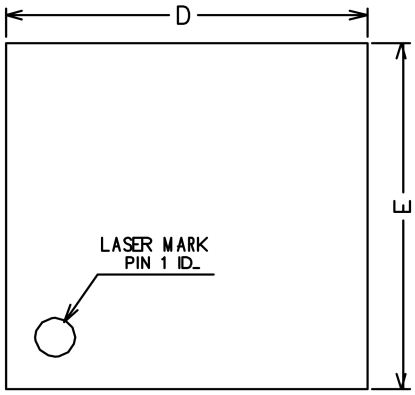

TOP VIEW

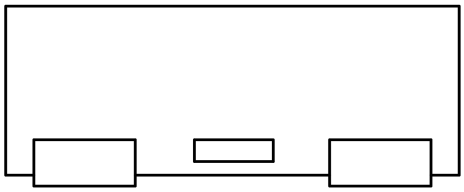

SIDE VIEW

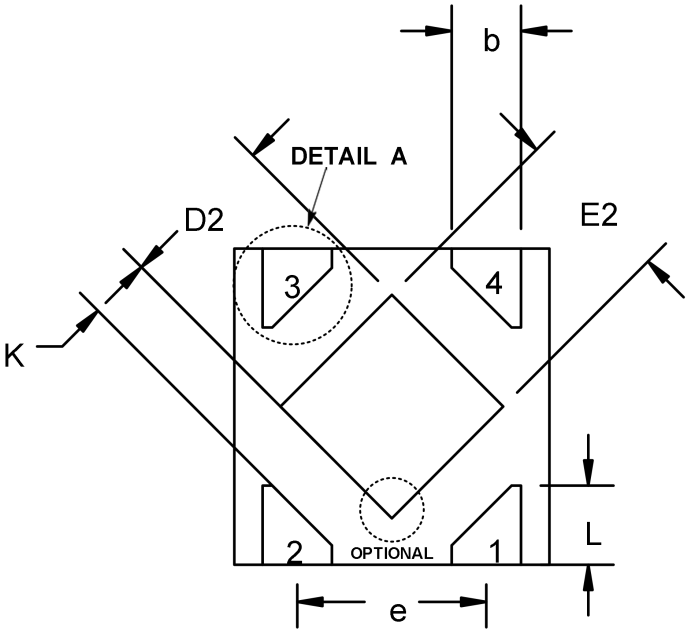

BOTTOM VIEW

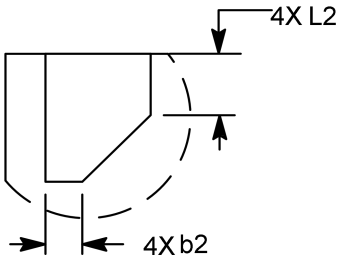

DETAIL A

Two options:

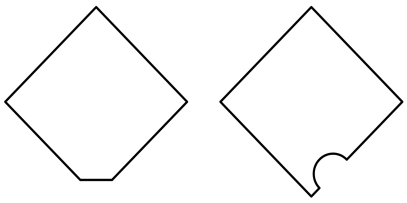

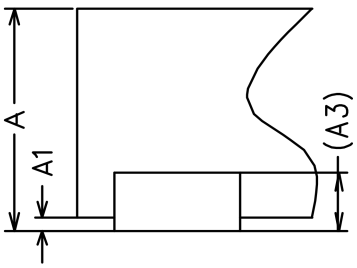

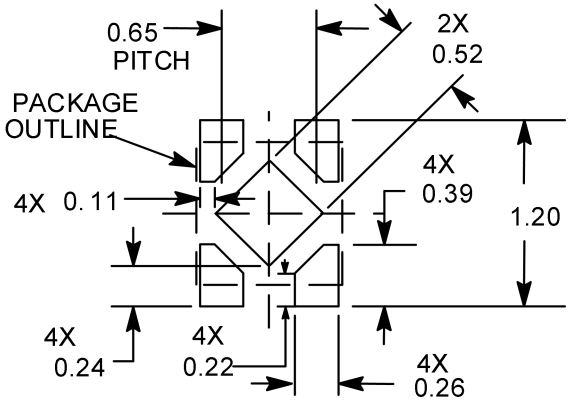

RECOMMENDED LAND PATTERN (Unit: mm)

© 2023 DIOO MICROCIRCUITS CO., LTD

Common Dimensions (Units of measure = Millimeter)			
Symbol	**Min**	**Nom**	**Max**
A	0.34	0.37	0.40
A1	0	0.02	0.05
A3		0.10 REF	
b	0.17	0.22	0.27
D	0.95	1.00	1.05
E	0.95	1.00	1.05
D2	0.43	0.48	0.53
E2	0.43	0.48	0.53
L	0.20	0.25	0.30
e	0.60	0.65	0.70
K	0.15	-	-
L2	0.07	0.12	0.17
b2	0.02	-	0.12

© 2023 DIOO MICROCIRCUITS CO., LTD

Physical Dimensions: SOT23-5

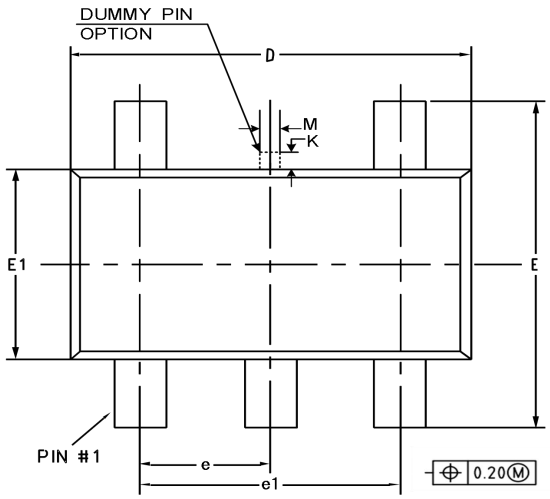

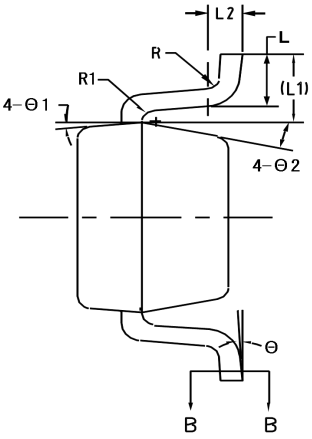

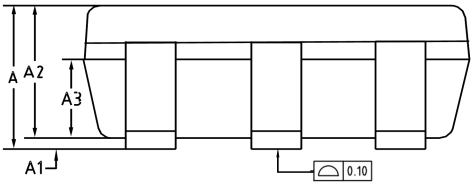

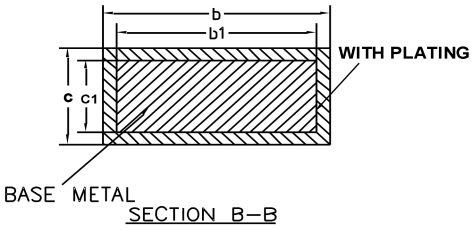

Common Dimensions (Units of measure = Millimeter)			
Symbol	**Min**	**Nom**	**Max**
A	-	-	1.25
A1	0	-	0.15
A2	1.00	1.10	1.20
A3	0.60	0.65	0.70
b	0.36	-	0.45
b1	0.35	0.38	0.41
c	0.14	-	0.20
c1	0.14	0.15	0.16
D	2.826	2.926	3.026
E	2.60	2.80	3.00
E1	1.526	1.626	1.726
e	0.90	0.95	1.00
e1	1.80	1.90	2.00
K	0	-	0.25
L	0.30	0.40	0.60
L1	0.59 REF		
L2	0.25 BSC		
M	0.10	0.15	0.25
R	0.05	-	0.20
R1	0.05	-	0.20
Θ	0°	-	8°
Θ1	8°	10°	12°
Θ2	10°	12°	14°

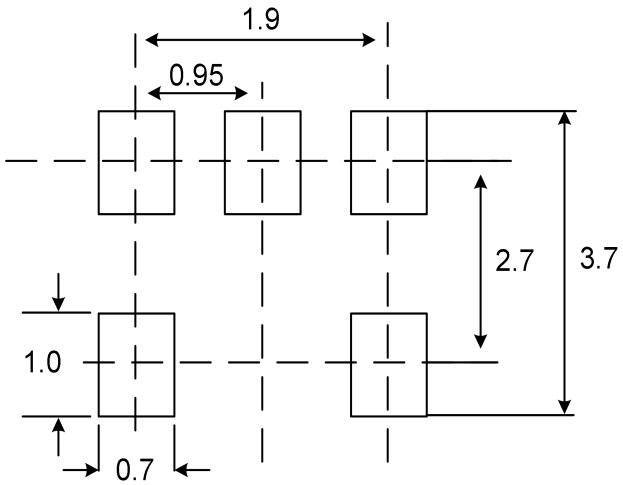

RECOMMENDED LAND PATTERN

© 2023 DIOO MICROCIRCUITS CO., LTD

Physical Dimensions: DFN0.8*0.8-4

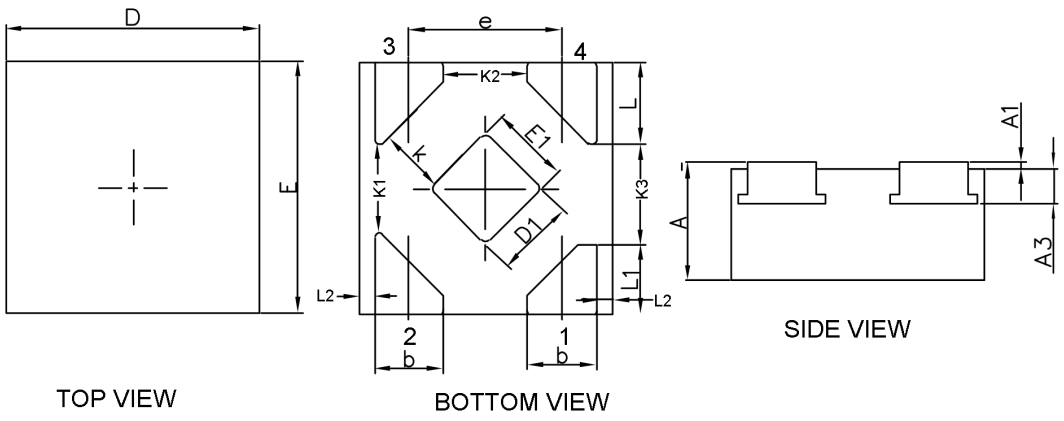

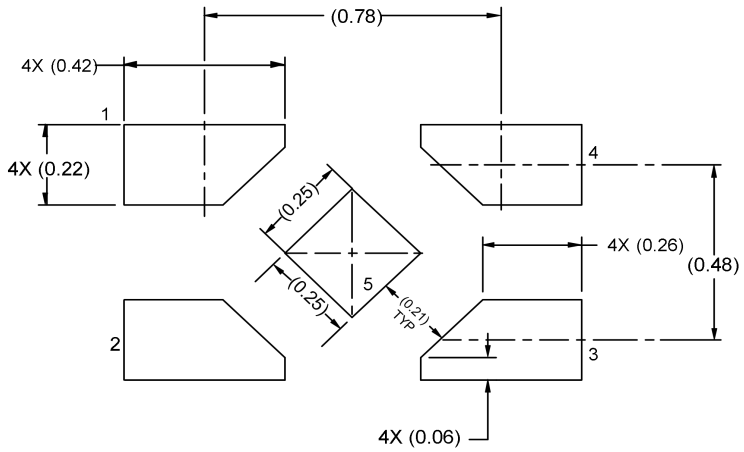

RECOMMENDED LAND PATTERN (Unit: mm)

Common Dimensions (Units of measure = Millimeter)			
Symbol	**Min**	**Nom**	**Max**
A	0.320	0.375	0.400
A1	0.000	0.020	0.050
A3		0.110 REF	
D	0.750	0.800	0.850
E	0.750	0.800	0.850
D1	0.200	0.250	0.300
E1	0.200	0.250	0.300
K		0.210 TYP	
K1		0.270 TYP	
K2		0.260 TYP	
K3		0.315 TYP	
b	0.170	0.220	0.270
e		0.480 TYP	
L	0.210	0.265	0.320
L1	0.170	0.220	0.270
L2		0.050 TYP	

© 2023 DIOO MICROCIRCUITS CO., LTD

CONTACT US

Dioo is a professional design and sales corporation for high-quality and performance analog semiconductors. The company focuses on industry markets, such as cell phones, handheld products, laptops, medical equipment, and so on. Dioo's product families include analog signal processing and amplifying, LED drivers, and charger ICs. Go to http://www.dioo.com for a complete list of Dioo product families.

For additional product information or full datasheet, please contact our sales department or representatives.

© 2023 DIOO MICROCIRCUITS CO., LTD