DIO82615
High Frequency Synchronous Rectifier

Features

- Supports Topologies such as Active Clamp Flyback, QR, DCM, CCM Flyback and LLC
- Maximum switching frequency: 800 kHz
- Internal 100V Power MOSFET
- Adaptive Minimum Off-time for Increased Noise Immunity
- Wide VIN Range: 5~30V
- High-side or Low-Side Rectification
- Compact package: SOIC-8, EP-SOIC8

Applications

- AC-DC Adapters
- USB Type-C and PD AC Adapters
- Server and Telecom Power Supply
- AC-to-DC Auxiliary Power Supply

Descriptions

The DIO82615 is a high frequency Synchronous Rectifier, specifically designed for power solution with minimal external components targeting at high frequency Flyback applications.

The drain to source (V_{DS}) sensing control scheme allows DIO82615 to work with multiple topologies, such as ACF/QR/DCM/CCM Flyback and LLC, et.

DIO82615 offers different minimum on-times to provide additional noise immunity. Robust operation in continuous conduction mode (CCM) is further enhanced with proportional gate-drive. Efficiency and noise immunity is enhanced with adaptive minimum off-time.

DIO82615 has multiple features that improve efficiency. Multiple standby modes further decreases standby power. This chip adopts special design to achieve reliable protection for safety requirement.

Typical Application

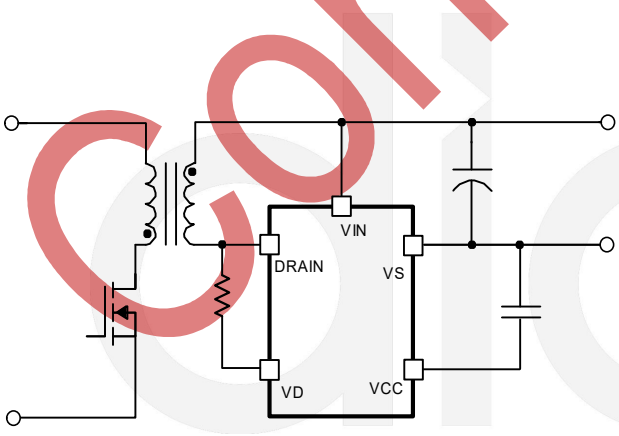

Low-Side SR

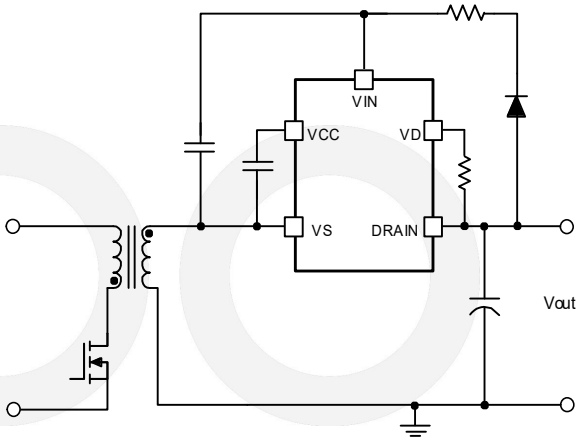

High-Side SR

Confidential

© 2022 DIOO MICROCIRCUITS CO., LTD

Ordering Information

Order Part Number	Top Marking		T_A	Package	
DIO82615CS8	DIOHBF1E	Green	-40 to 85°C	SOIC8	Tape & Reel, 2500
DIO82615XS8	DIOHBF1E	Green	-40 to 85°C	EP-SOIC8	Tape & Reel, 2500

Pin Assignments

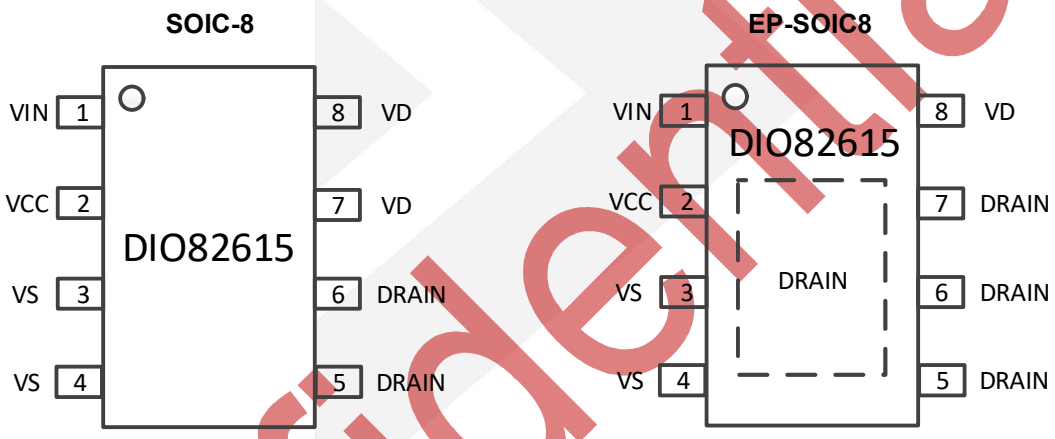

Figure 1. Top View

Pin Description

Pin Name	Description
VCC	Power regulator pin. This pin is both the power supply to internal circuit and the voltage to be monitored.
DRAIN	DRAIN of the MOSFET.
VIN	Power supply pin.
VD	MOSFET Vds Sensing pin.
VS	Source of the MOSFET and Ground pin.

Confidential

© 2022 DIOO MICROCIRCUITS CO., LTD

Absolute Maximum Ratings

Stresses beyond those listed under “Absolute Maximum Rating” may cause permanent damage to the device. These are stress ratings only and functional operation of the device at these or any other condition beyond those indicated in the operational sections of the specifications is not implied. Exposure to absolute maximum rating conditions for extended periods may affect device reliability.

Parameter		Rating	Unit
VIN		-0.3 to 30	V
VCC		12	V
DRAIN		-0.7 to 100	V
VD		-0.7 to 200	V
Power Dissipation, P_D @ T_A = 25°C, SOIC-8		1.1	W
Package Thermal Resistance, SOIC-8	Θ_{JA}	100	°C/W
	Θ_{JC}	50	
Power Dissipation, P_D @ T_A = 25°C, EP-SOIC8		3	W
Package Thermal Resistance, EP-SOIC-8	Θ_{JA}	30	°C/W
	Θ_{JC}	10	
Storage Temperature Range		-65 to 150	°C
Junction Temperature Range		150	°C
Lead Temperature Range		260	°C

(1)Input voltages more negative than indicated may exist on any listed pin without excess stress or damage to the device if the pin’s input current magnitude is limited to less than -10mA.

Recommended Operating Conditions

The Recommended Operating Conditions table defines the conditions for actual device operation. Recommended Operating conditions are specified to ensure optimal performance to the datasheet specifications. DIOO does not Recommend exceeding them or designing to Absolute Maximum Ratings.

Symbol	Parameter	Rating	Unit
VIN	input voltage	4 to 28	V
T_J	Junction temperature	-40 to 125	℃

Confidential

© 2022 DIOO MICROCIRCUITS CO., LTD

Electrical Characteristics

At VIN = 12 V_{DC}, C_{VCC} = 2.2 µF, −40°C ≤ T_J = T_A ≤ +125°C, all voltages are with respect to VS, and currents are positive into and negative out of the specified terminal, unless otherwise noted. Typical values are at T_J = +25°C.

Symbol	Parameter	Test Conditions	MIN	TYP	MAX	UNIT
VIN POWER Section						
I_{VIN_ST}	VIN current, VCC undervoltage	VIN = 4 V, DRAIN = 0 V		100	150	µA
I_{VIN_ON}	VIN current, operation state	VIN = 12 V		0.92		mA
		VIN = 5 V		0.9		mA
I_{VIN_SB}	VIN current, standby mode	VIN = 12 V, DRAIN = 1 V		390		µA
		VIN = 5 V, DRAIN = 1 V		300		µA
VCC CONTROL Section						
V_{VCC_ON}	VCC turn-on threshold	Turn-on detected by I_{VIN} rising		4.5		V
V_{VCC_OFF}	VCC turn-off threshold	Turn-off detected by I_{VIN} falling		4		V
V_{VCC_HYST}	VCC UVLO hysteresis	V_{VCC_HYST} = V_{VCC_ON} –V_{VCC_OFF}		0.5		V
DRAIN SENSING Section						
V_{DRV_ON}	DRAIN threshold voltage when driver turn on	DRAIN falling, T_J = 25°C		-240		mV
V_{DRV_OFF}	DRAIN threshold voltage when driver turn off	DRAIN rising, –40°C ≤T_J ≤ 125°C		-10		mV
$t_{d_DRV_ON}$	driver turn-on propagation delay	DRAIN transitions from 4.7V to –0.4V, T_J = 25°C		60		ns
$t_{d_DRV_OFF}$	driver turn-off propagation delay	DRAIN moves from -0.3V to 4.7V in 5ns		20		ns
VCC SUPPLY Section						
V_{VCC}	VCC pin regulation level	I_{LOAD_VCC} = 0 mA		9.5		V
V_{VCC_REG}	Load regulation on VCC	I_{LOAD_VCC}= 0 mA to 10 mA			0.1	V
I_{VCC_SHORT}	VCC short-circuit current	V_{VCC} = 0 V		5	15	mA
I_{VCC_LMT}	VCC current limit	V_{VCC} = 8.5 V		40	60	mA
PWM Section						
t_{ON_MIN}	Minimum SR conduction time		360	520	670	ns
t_{OFF_MIN}	Minimum SR off-time		260	380	490	ns
t_{OFF_MAX}	Maximum SR off-blanking time			3.8		µs
STANDBY Section						
t_{DET_SB}	Standby mode detection time			4.5		ms
f_{TRIG_SB}	Average Frequency entering			9		kHz

Confidential

© 2022 DIOO MICROCIRCUITS CO., LTD

	standby mode					
f_{HYS_SB}	Average frequency hysteresis for standby mode		2	3	4	kHz
Power MOSFET Section						
V_{BVDSS}	Break-down Voltage	I_{DS}=250μA, T_J=25℃	100			V
I_{DSS}	Off-state drain current	V_{DS}=100V, V_{GS}=0V, T_J=25°C			1	μA
R_{DSON}	MOSFET R_{DSON}	V_{GS}=10V		14.5	18	mΩ

Confidential

© 2022 DIOO MICROCIRCUITS CO., LTD

Function Diagram

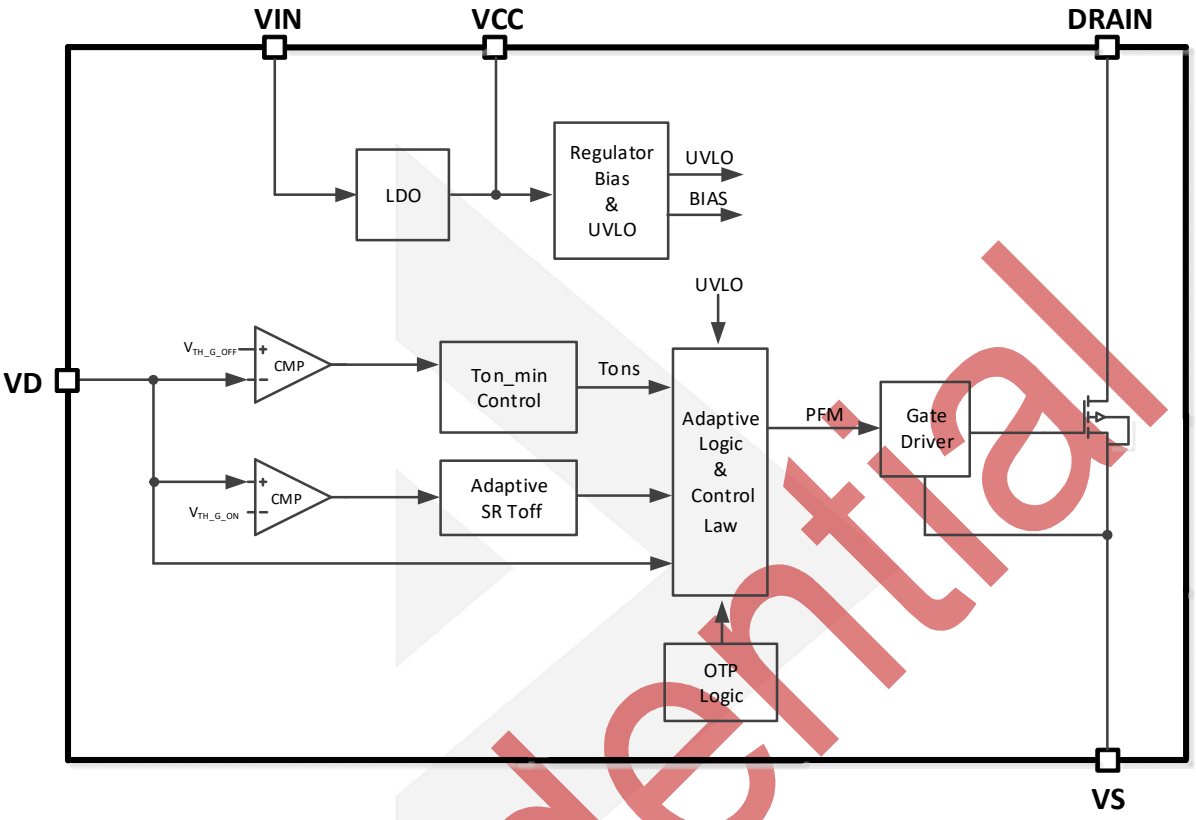

Typical System Application

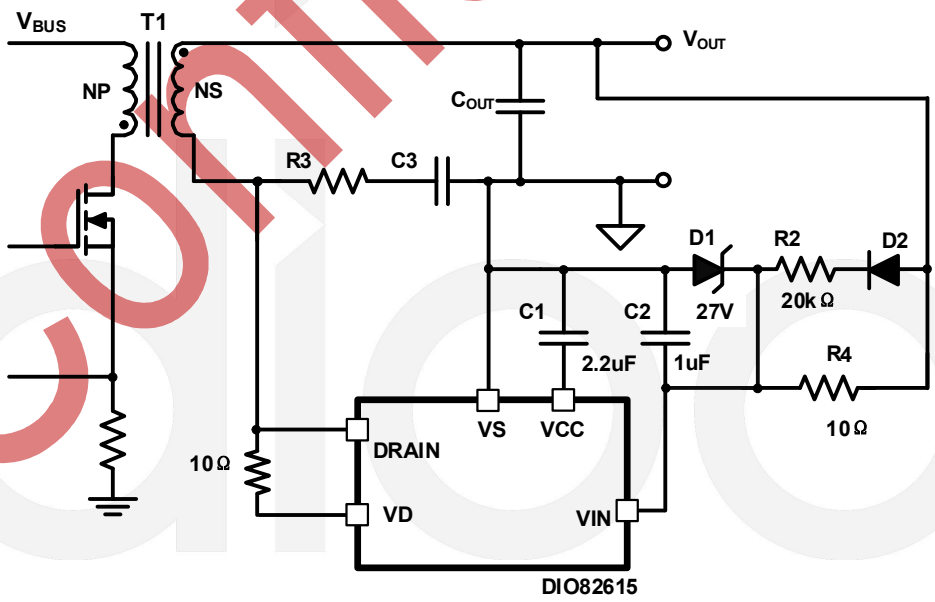

Confidential

© 2022 DIOO MICROCIRCUITS CO., LTD

Operation

The DIO82615 is an intelligent synchronous rectifier (SR), which combines an ultra-low rdson MOSFET, to emulate the traditional diode rectifier at the secondary side of Flyback converter. The SR MOSFET is turned on when V_{DS} exceeds turn-on threshold V_{DRV_ON}, and is turned off when V_{DS} falls below V_{DRV_OFF}. The DIO82615 supports operation in DCM/CCM/QR/ACF topology. Fixed minimum on-time allows the controller to operate up to 1MHz switching frequency. The adaptive minimum off-time control simplifies the design, making the controller suitable for a wide range of applications and switching frequencies, with good immunity to noise caused by parasitic ringing. To minimize the standby power, automatic light-load mode disables the driver pulses when the average switching frequency of the converter becomes lower than 9 kHz. The wide VIN range and gate driver clamp make the controller ideal for wide output voltage range applications such as USB Power Delivery adapters.

Feature Description

Power Management

The DIO82615 is powered from VCC pin through the internal linear regulator between VIN pin and VCC pin. This configuration allows optimal design of the gate driver stage to achieve fast driving speed, low driving loss and higher noise immunity.

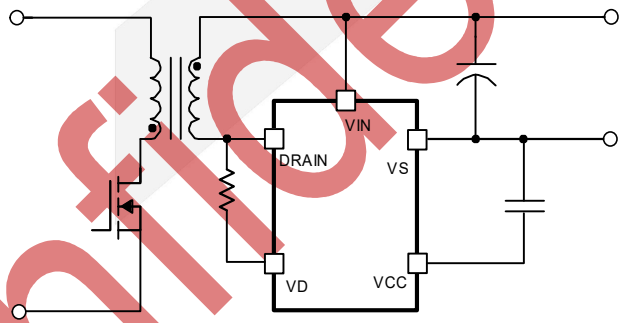

Low-Side SR

In low-side SR configuration, the DIO82615 is powered from the output voltage directly.
During start up, the output voltage rises from zero. With the rising of output voltage, the internal linear regulator operates in a pass-through mode, and the VCC pin voltage rises together with the output voltage. The UVLO function of DIO82615 monitors the voltage on the VCC pin instead of the VIN pin. Before VCC pin voltage rises above UVLO on threshold V_{VCC_ON}, DIO82615 consumes the minimum current I_{VIN_ST}. Once the VCC voltage rises above V_{VCC_ON}, the device starts to consume the full operating current and controls the switching of the SR MOSFET.

When VIN voltage is above 9.5 V, the internal linear regulator operates in regulator mode. The VCC pin is well regulated at 9.5 V. It is required to have a sufficient bypass capacitor on the VCC pin to ensure stable operation of the linear regulator. A 2.2μF bypass capacitor is recommended.

Confidential

© 2022 DIOO MICROCIRCUITS CO., LTD

When VIN voltage is below 9.5 V, the internal linear regulator operates in pass-through mode. Depending on the load current, the regulator has a voltage drop of 200mV. The DIO82615 continues to operate during this mode

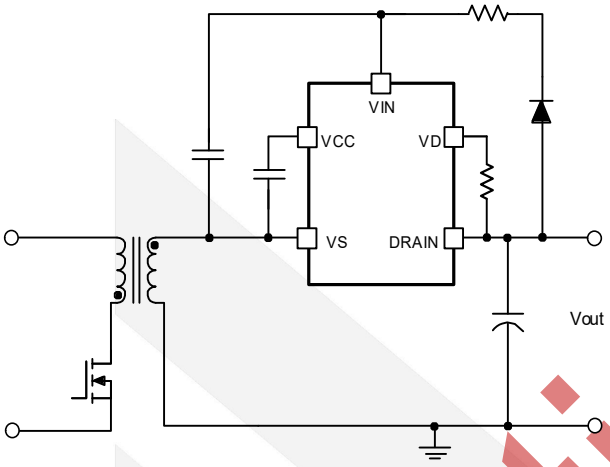

High-Side SR

until the VCC pin voltage drops below V_{VCC_OFF}.

The same biasing method can also maintain the SR controller operation in high-side SR configuration.

Synchronous Rectifier Control

The DIO82615 determines the conduction time of the SR-MOSFET by comparing the drain-to-source voltage (V_{DS}) of the MOSFET against a turn-on threshold and a turn-off threshold. The MOSFET turn on when V_{DS} of the MOSFET falls below V_{DRV_ON} and is turn off when V_{DS} rises above V_{DRV_OFF}. Since when SR is conducting, its voltage V_{DS} is negative, more negative voltage drop means higher SR current.

Adaptive Blanking Time

In power converters, the sensed the voltage across the SR is often noisy which caused by the parasitic ringing. This parasitic ringing is usually associated with the SR and the primary-side switch turning on and off. Blanking time is used to deal with the parasitic ringing to prevent SR false turn on and off.

VCC Voltage Clamping

With the wide VIN voltage range capability, DIO82615 clamps the gate driver voltage to a maximum level of 9.5V to allow fast driving speed, low driving loss and compatibility with different MOSFETs. The 9.5V level is chosen to minimize the conduction loss.

The gate driver voltage clamp is achieved through the regulated VCC pin voltage. When VIN voltage is above 9.5V, the linear regulator regulates the VCC pin voltage to be 9.5 V, which is also the power supply of the gate driver stage. This way, the MOSFET gate is clamped at 9.5 V, regardless of how high the VIN voltage is. When the VIN voltage is close to or below the programmed VCC pin regulation voltage, DIO82615 can no longer regulate the VCC pin voltage. Instead, it enters a pass-through mode where the VCC pin voltage follows the VIN pin voltage with slight voltage drop out. During this time, the gate driver voltage is lower than its programmed value but still provides SR driving capability. The DIO82615 is disabled once the VCC pin voltage drops below its UVLO level.

Confidential

© 2022 DIOO MICROCIRCUITS CO., LTD

Standby Mode

With more stringent efficiency standards such as Department of Energy level VI, external power supplies are expected to maintain ultra-low standby power at no-load conditions. So it is essential for the SR controller to enter the low-power standby mode.

During standby mode, the power converter loss allocation is quite different compared to heavy load. At heavier load, both conduction loss and switching loss are quite high. However, at light load, the conduction loss becomes insignificant and switching loss dominates. To help improve standby power, modern power supply controllers often enter burst mode to save switching loss. Furthermore, in each burst switching cycle, the energy delivered is maximized to minimize the number of switching cycles needed and further reduce the switching loss.

Instead, in DIO82615, a frequency based standby mode detection is used. DIO82615 continuously monitors the average switching frequency of the SR. Once the average switching frequency of the SR controller drops below 9 kHz, the DIO82615 enters standby mode and reduces its current consumption to I_{VIN_SB}. During standby mode, the driver kept low while the SR switching cycle is continuously monitored. Once the average switching frequency is more than 12 kHz over a 4.5 ms window, the SR operation is enabled again. DIO82615 ignores the first six SR switching cycles after coming out of standby mode to make sure the SR isn't turned on in the middle of the switching cycle.

Different operation Modes

UVLO Mode

DIO82615 uses the VCC pin voltage to detect UVLO instead of the VIN pin voltage. When the VCC voltage to the device has not yet reached the V_{VCC_ON} threshold, or has fallen below the UVLO threshold V_{VCC_OFF}, the device operates in the low-power UVLO mode. In this mode, most internal functions are disabled and VIN current is I_{VIN_ST}, typically less than 100 μA. If the VCC pin is above 2V, there is an active pull-down from driver to VS to prevent SR turn-on due to noise. When the VCC pin voltage is less than 2V, there is a weak pull down from driver to VS and this also helps prevent false turn on of the SR MOSFET. The device exits UVLO mode when VCC increases above the V_{VCC_ON} threshold.

Standby Mode

Standby mode is a low-power operating mode to help achieve low standby power for the entire power supply. DIO82615 detects the operating frequency of the SR MOSFET and enters or exits standby mode operation automatically. VCC current reduces to I_{VIN_SB} level. During standby mode, the majority of the SR control functions are disabled, except the switching frequency monitoring, VCC monitoring and the active pull-down on the gate driver.

Hi Mode

Hi mode is the normal operating mode of the controller when not in UVLO mode or standby mode. In this mode, VCC current is higher because all internal control and timing functions are operating. VCC current is the sum of I_{VIN_ON} plus the average current necessary to drive the MOSFET. The drive voltage is automatically adjusted based on the DRAIN to VS voltage according to the proportional gate drive operation in Hi mode.

Confidential

© 2022 DIOO MICROCIRCUITS CO., LTD

Physical Dimensions: SOIC-8

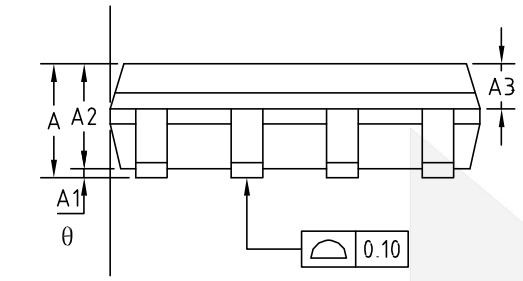

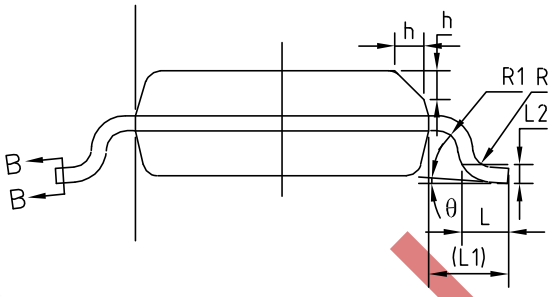

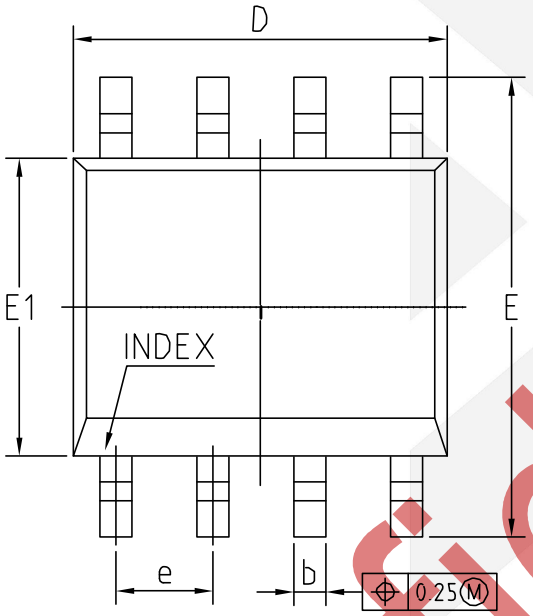

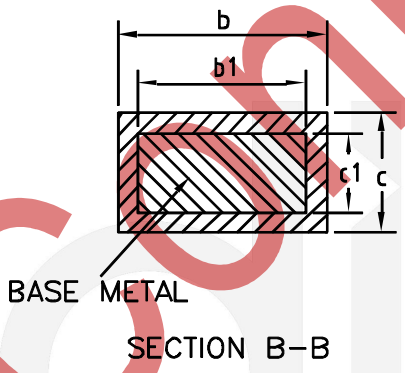

COMMON DIMENSIONS (UNITS OF MEASURE=MILLIMETER)			
Symbol	**MIN**	**NOM**	**MAX**
A	1.35	1.55	1.75
A1	0.10	0.15	0.25
A2	1.25	1.40	1.65
A3	0.50	0.60	0.70
b	0.38	-	0.51
b1	0.37	0.42	0.47
c	0.17	-	0.25
c1	0.17	0.20	0.23
D	4.80	4.90	5.00
E	5.80	6.00	6.20
E1	3.80	3.90	4.00
e	1.27BSC		
L	0.45	0.60	0.80
L1	1.04REF		
L2	0.25BSC		
R	0.07	-	-
R1	0.07	-	-
h	0.30	0.40	0.50
Θ	0°	-	8°

Confidential

© 2022 DIOO MICROCIRCUITS CO., LTD

Physical Dimensions: EP-SOIC8

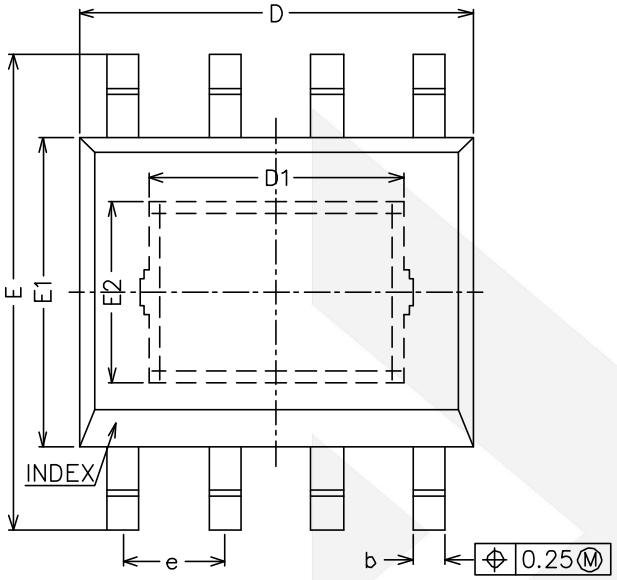

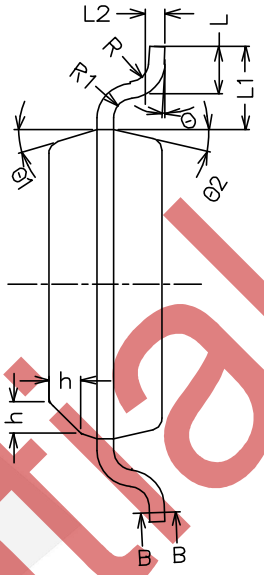

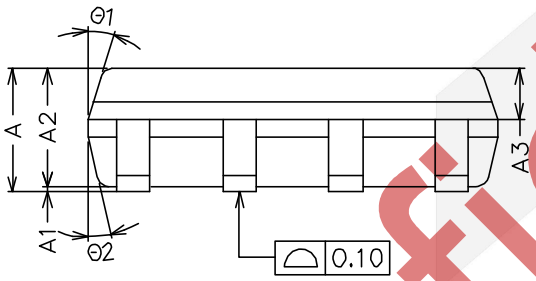

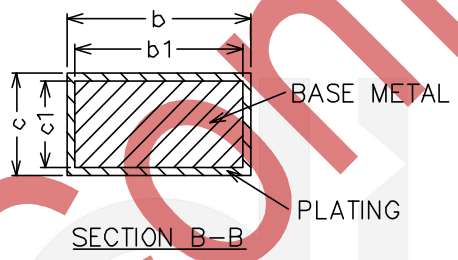

COMMON DIMENSIONS (UNITS OF MEASURE=MILLIMETER)			
Symbol	**MIN**	**NOM**	**MAX**
A	1.35	1.45	1.65
A1	0	-	0.15
A2	1.35	1.40	1.55
A3	0.50	0.60	0.70
b	0.38	-	0.47
b1	0.37	0.40	0.43
c	0.17	-	0.25
c1	0.17	0.20	0.23
D	4.80	4.90	5.00
D1	3.02	3.17	3.32
E	5.80	6.00	6.20
E1	3.80	3.90	4.00
E2	2.13	2.28	2.43
e	1.17	1.27	1.37
L	0.45	0.60	0.80
L1	1.04REF		
L2	0.25BSC		
R	0.07	-	-
R1	0.07	-	-
h	0.30	0.40	0.50
θ	0°	-	8°
θ1	15°	17°	19°
θ2	11°	13°	15°

Confidential

© 2022 DIOO MICROCIRCUITS CO., LTD

CONTACT US

Dioo is a professional design and sales corporation for high-quality and performance analog semiconductors. The company focuses on industry markets, such as, cell phone, handheld products, laptop, and medical equipment and so on. Dioo's product families include analog signal processing and amplifying, LED drivers and charger IC. Go to http://www.dioo.com for a complete list of Dioo product families.

For additional product information, or full datasheet, please contact with our Sales Department or Representatives.

Confidential

© 2022 DIOO MICROCIRCUITS CO., LTD