DZ106

High Voltage Low R_{ON} Dual-Pole Single-Throw Switch

Description

The DZ106 is a high voltage low R_{ON} dual-pole single-throw and bidirectional on / off switch. The COM1, 2 and NO1, 2 pins tolerate a maximum voltage of 18 V. The output of the high power Class-D audio amplifier can pass through the switch without attenuation.

The enable pin and supply pin are combined in the DZ106. The switch is on when device is powered. The switch is off when VCCEN is connected to GND. The signal over VCCEN is ensured by the topology of the switch and there's no need to integrate an external discrete component. The DZ106 features great on-resistance matching between SPST switch and on-resistance flatness over full signal range, which provides perfect linearity and extremely low distortion for audio signal through.

The DZ106 is housed in green package: WLCSP-6 (0.815 mm × 1.17 mm, 0.4 mm pitch).

Features

- VCCEN voltage range: 1.1 to 5.5 V
- Recommended voltage for COM/NO: -0.5 to 16 V
- COMx to NOx on-resistance: 130 mΩ each (typ.)
- Max 1.5 A continuous current capability each path
- Peak 2.5 A current (<1 ms) capability each path
- THD + N: -105 dB at V_{ON} = 1 V_{P-P}, R_L = 32 Ω
- Off-isolation: -107 dB
- Crosstalk: -88 dB
- Over temperature protection (OTP)
- Robust ESD: ±2 kV HBM, ±2 kV CDM
- Package: WLCSP-6

Applications

- Smart phones
- AR / VR devices
- Tablet PCs
- Wearables

© 2023 DIOO MICROCIRCUITS CO., LTD.

Ordering Information

Ordering Part No.	Top Marking	MSL	RoHS	T_A	Package	
DZ106WL6		1	Green	-40 to 85°C	WLCSP-6	Tape & Reel, 3000

If you encounter any issue in the process of using the device, please contact our customer service at marketing@dioo.com or phone us at (+86)-21-62116882. If you have any improvement suggestions regarding the datasheet, we encourage you to contact our technical writing team at docs@dioo.com. Your feedback is invaluable for us to provide a better user experience.

© 2023 DIOO MICROCIRCUITS CO., LTD

Table of Contents

1. Pin Assignment and Functions 1
2. Absolute Maximum Ratings 2
3. Recommended Operating Condition 2
4. ESD Ratings 3
5. Electrical Characteristics 3
6. Typical Characteristics 5
7. Block Diagram 7
8. Function Description 7
9. Application Information 8
    9.1. Typical application 8
    9.2. Analog switch 8
    9.3. System design 8
10. Physical Dimensions: WLCSP-6 9

List of Figures

Figure 1. WLCSP-6 (Top view) 1
Figure 2. Bandwidth vs. Frequency 5
Figure 3. THD + N vs. Frequency 5
Figure 4. Crosstalk vs. Frequency 5
Figure 5. Off isolation vs. Frequency 5
Figure 6. Switch on resistor 5
Figure 8. Channel on / off capacitance 6
Figure 7. Switch off leakage 5
Figure 9. Bandwidth 6
Figure 10. Channel-to-channel crosstalk 6
Figure 11. Off-isolation 6
Figure 12. Turn-on / Turn-off 6
Figure 13. Typical application for smart phone receiver and speaker 8

List of Tables

Table 1. Function table 1

 © 2023 DIOO MICROCIRCUITS CO., LTD

1. Pin Assignment and Functions

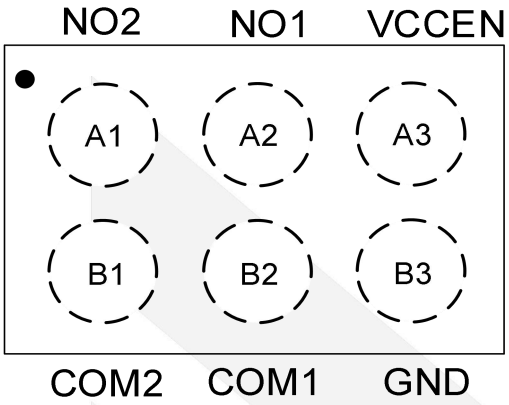

Figure 1. WLCSP-6 (Top view)

Pin No.	Name	Description
A1	NO2	Normally open terminal for SPST switch 2
A2	NO1	Normally open terminal for SPST switch 1
A3	VCCEN	Supply voltage enable input. Bypass VCCEN to GND with a 0.1 μF capacitor as close to the chip as possible
B1	COM2	Common terminal for SPST switch 2
B2	COM1	Common terminal for SPST switch 1
B3	GND	Ground

Table 1. Function table

VCCEN	SPST Switch 1	SPST Switch 2
0	COM1 to NO1 switch off	COM2 to NO2 switch off
1	COM1 to NO1 switch on	COM2 to NO2 switch on

 © 2023 DIOO MICROCIRCUITS CO., LTD

2. Absolute Maximum Ratings

Exceeding the maximum ratings listed under Absolute Maximum Ratings when designing is likely to damage the device permanently. Do not design to the maximum limits because long-time exposure to them might impact the device's reliability. The ratings are obtained over an operating free-air temperature range unless otherwise specified.

Symbol	Parameter	Ratings	Unit
VCCEN	VCCEN to GND	-0.3 to 6	V
$V_{COM1,2}$, $V_{NO1,2}$	Voltage of COM1,2 and NO1,2 to GND	-1 to 18	V
I_{IN}	SPST switch I/O current (continuous) each path	±1.5	A
I_{IN_PEAK}	SPST switch I/O current (peak, < 1 ms) each path	±2.5	A
T_{STG}	Storage junction temperature	-65 to 150	°C
T_J	Operating junction temperature	150	°C
T_L	Lead temperature (soldering, 10 seconds)	260	°C

3. Recommended Operating Condition

Recommended operating conditions are specified to ensure optimal performance to the datasheet specifications. The ratings are obtained over an operating free-air temperature range unless otherwise specified.

Symbol	Parameter	Ratings	Unit
VCCEN	Supply voltage to enable the chip	1.1 to 5.5	V
	Signal swing range through SPST switch: COM1,2, NO1,2	-0.5 to 16	V
I_{IN}	SPST switch I/O current (continuous) each path	1.5	A
I_{IN_PEAK}	SPST switch I/O Current (peak, <1 ms) each path	2.5	A
T_A	Ambient operating temperature,	-40 to 85	°C
	VCCEN capacitor	0.1	μF

 © 2023 DIOO MICROCIRCUITS CO., LTD

4. ESD Ratings

When a statically-charged person or object touches an electrostatic discharge sensitive device, the electrostatic charge might be drained through sensitive circuitry in the device. If the electrostatic discharge possesses sμFficient energy, damage might occur to the device due to localized overheating.

Model	Condition	Value	Unit
Human-body model	EIA/JESD22-A114, all pins	±2000	V
Charged device model	JESD22-C101, all pins	±2000	V

Note:

(1) Refer to JEDEC JESD51-7, use a 4-layer board

5. Electrical Characteristics

The values are obtained under these conditions unless otherwise specified: VCCEN = 1.1 to 5.5 V, T_A = -40 to 85°C. Typical values are at VCCEN = 2.5 V, C_{VCCEN} = 0.1 μF and T_A = 25°C.(1)

Symbol	Parameter	Conditions	Min	Typ	Max	Unit
Power supply						
VCCEN	Power-supply range		1.1		5.5	V
I_{CC}	Supply current	VCCEN = 1.2 V		55		μA
		VCCEN = 1.8 V		42		
I_{OFF}	Supply current	VCCEN = 0 V, V_{NO} or V_{COM} = 2.5 V		1		nA
Analog switch						
$V_{NO1,2}$, $V_{COM1,2}$	Analog signal range		-0.5		16	V
R_{ON}	On-resistance	VCCEN = 2.5 V, $V_{COM1,2}$ = 0 V, $I_{COM1,2}$ = 100 mA (2)		130	150	mΩ
		VCCEN = 1.8 V, $V_{COM1,2}$ = 0 V, $I_{COM1,2}$ = 100 mA (2)		130	150	
ΔR_{ON}	On-resistance match between channels	VCCEN = 2.5 V, $I_{COM1,2}$ = 100 mA, between two channels		2		mΩ
R_{FLAT}	On-resistance flatness	VCCEN = 2.5 V, $I_{COM1,2}$ = 100 mA, $V_{COM1,2}$ = 0.3 to 16 V (3),(4)		1		mΩ
$I_{NO1,2(OFF)}$, $I_{COM1,2(OFF)}$	NO1,2, COM1,2 Off-leakage current	VCCEN = 0 V, $V_{NO1,2}$ = 16 V, $V_{COM1,2}$ = 16 V, unconnected		0.9		μA
		VCCEN = 0 V, $V_{NO1,2}$ = 2.5 V, $V_{COM1,2}$ = 2.5 V, unconnected		1		nA
$I_{NO1,2(ON)}$, $I_{COM1,2(ON)}$	NO1,2, COM1,2 On-leakage current	VCCEN = 2.5 V, switch closed, $V_{COM1,2}$ = $V_{NO1,2}$ = 16 V		1		μA
		VCCEN = 2.5 V, switch closed, $V_{COM1,2}$ = $V_{NO1,2}$ = 2.5 V		100		nA

 © 2023 DIOO MICROCIRCUITS CO., LTD

Symbol	Parameter	Conditions	Min	Typ	Max	Unit
Dynamic timing						
t_{ON}	Turn-on time	VCCEN from 0 to 2.5 V, $V_{NO1,2}$ = 5.5 V, R_L = 50 Ω		770		µs
t_{OFF}	Turn-off time	VCCEN from 2.5 to 0 V, $V_{NO1,2}$ = 5.5 V, R_L = 50 Ω		5		µs
Audio performance						
THD + N	Total harmonic distortion plus noise	f = 20 Hz to 20 kHz, V_{ON} = 1 V_{P-P}, R_L = 32 Ω		-105		dB
		f = 20 Hz to 20 kHz, V_{ON} = 1 V_{P-P}, R_L = 8 Ω		-102		
		f = 20 Hz to 20 kHz, V_{ON} = 1 V_{RMS}, R_L = 32 Ω		-98		
		f = 20 Hz to 20 kHz, V_{ON} = 1 V_{RMS}, R_L = 8 Ω		-102		
V_{ISO}	Off-isolation	R_L = 50 Ω; $V_{COM1,2}$ = 0.5 V_{P-P}, f = 1 kHz, VCCEN = 0 V, DC bias = 0.25 V		-107		dB
V_{CT}	Crosstalk	R_L = 50 Ω; $V_{COM1,2}$ = 0.5 V_{P-P}, f = 1 kHz		-88		dB
BW	-3 dB bandwidth			340		MHz
$C_{NO1,2(OFF)}$	NO1,2 Off-capacitance	$V_{NO1,2}$ = 0.5 V_{P-P}, f = 1 MHz, COM1,2 unconnected		22		pF
$C_{COM1,2(ON)}$	COM1,2 On-capacitance	$V_{NO1,2}$ = 0.5 V_{P-P}, f = 1 MHz		25		pF
Thermal protection						
T_{SHDN}	Thermal shutdown			140		°C
T_{HYST}	Thermal hysteresis			30		°C

Note:

(1) All specifications are 100% production tested at T_A = 25°C, unless otherwise noted. Specifications are over T_A = -40°C to 85°C and are guaranteed by design.

(2) The same limits apply for $V_{COM1,2}$ = -0.5 to 16 V and are guaranteed by design.

(3) Flatness is defined as the difference between the maximum and minimum value of on-resistance, as measured over specified analog signal ranges.

(4) Guaranteed by design.

(5) Specifications subject to change without notice.

 © 2023 DIOO MICROCIRCUITS CO., LTD

6. Typical Characteristics

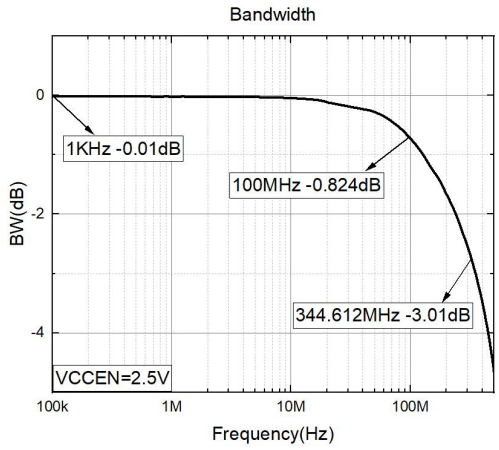

Figure 2. Bandwidth vs. Frequency

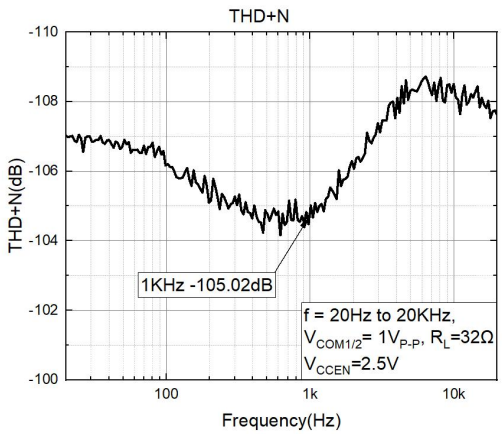

Figure 3. THD + N vs. Frequency

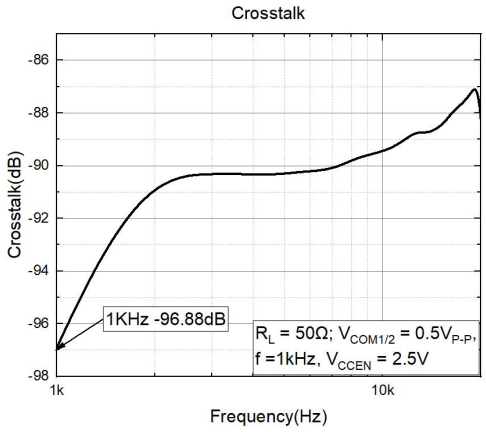

Figure 4. Crosstalk vs. Frequency

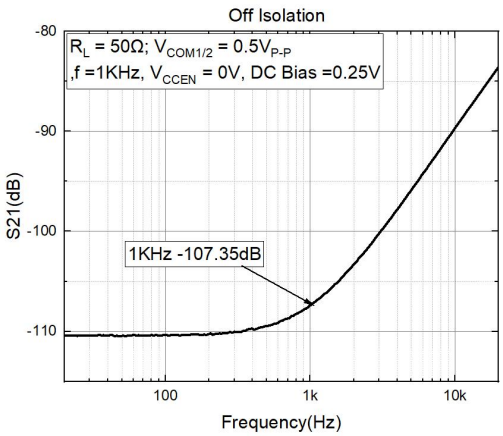

Figure 5. Off isolation vs. Frequency

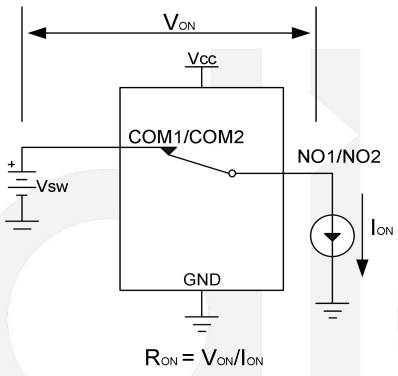

Figure 6. Switch on resistor

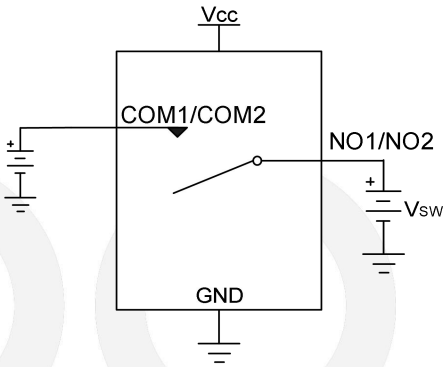

Figure 7. Switch off leakage

 © 2023 DIOO MICROCIRCUITS CO., LTD

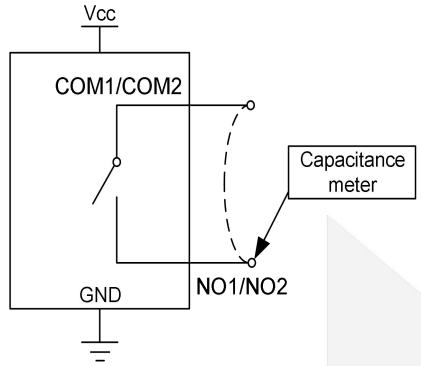

Figure 8. Channel on / off capacitance

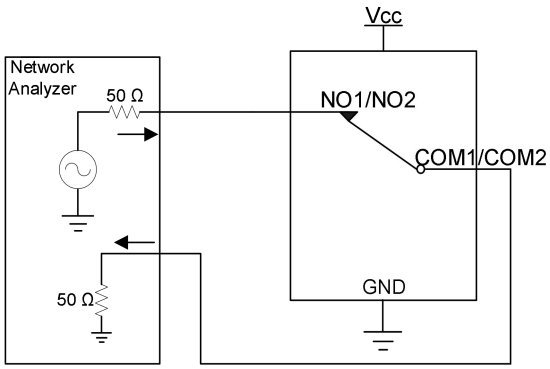

Figure 9. Bandwidth

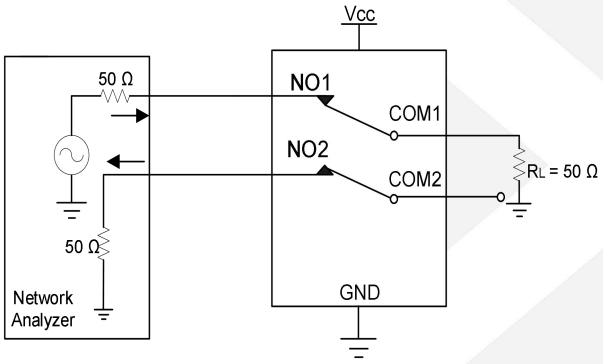

Figure 10. Channel-to-channel crosstalk

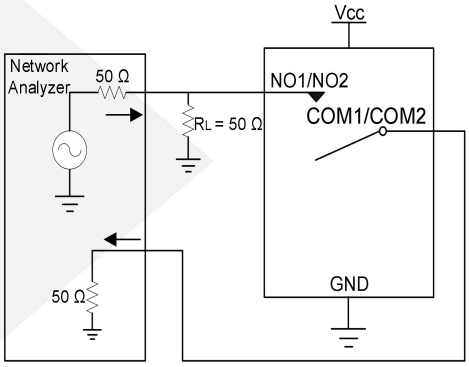

Figure 11. Off-isolation

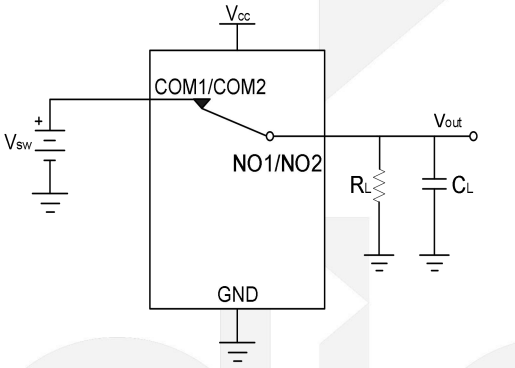

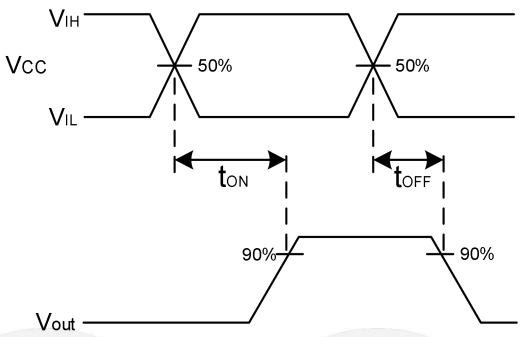

Figure 12. Turn-on / Turn-off

 © 2023 DIOO MICROCIRCUITS CO., LTD

7. Block Diagram

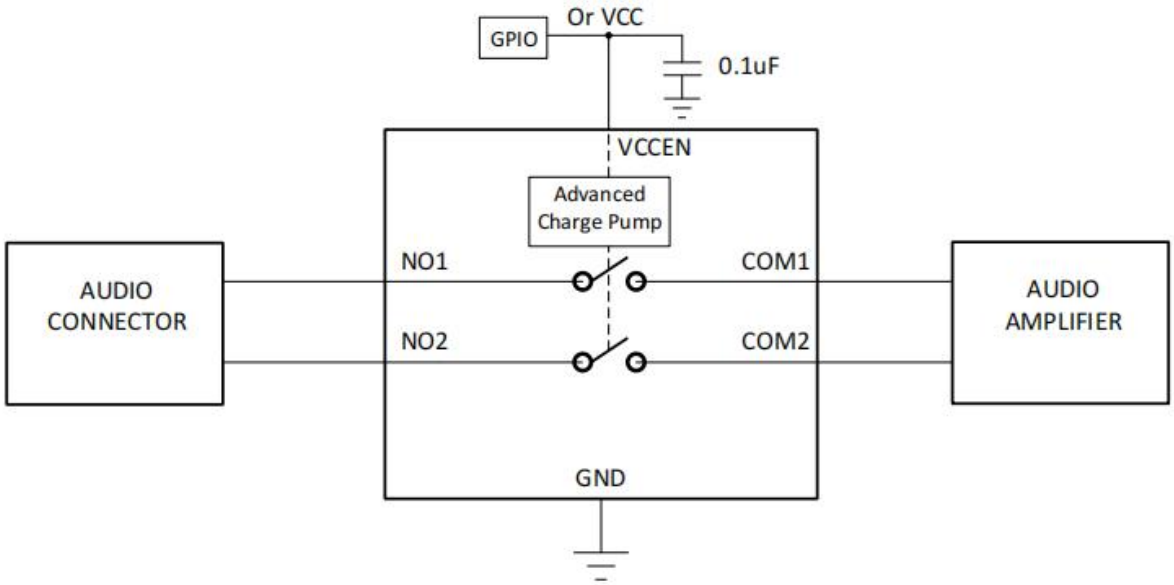

8. Function Description

The DZ106 is an ultra-small, low on-resistance, high ESD protected DPST switch that operates from a 1.1 to 5.5 V supply and passes up to 16 V analog or PWM signals, such as smart audio, video or control signals. The switch features the low on-resistance (R_{ON}), which is necessary for high-performance switching applications. The beyond-the-rails signal capability of the DZ106 allows signals below or above VCCEN to pass without distortion.

 © 2023 DIOO MICROCIRCUITS CO., LTD

9. Application Information

Important notice: Validation and testing are the most reliable ways to confirm system functionality. The application information is not part of the specification and is for reference purposes only.

9.1. Typical application

The combination of speaker and receiver is always used in portable devices for stereo solution. In order to provide high audio volume, the high voltage speaker driver, such as smart audio driver, is used to drive it. In speaker mode, it can achieve excellent audio performance. In receiver mode, the noise floor of smart audio driver is not good for receiver performance and TDD noise will impact it. The DZ106 provides low-R_{ON} channels to pass high voltage audio signals from smart audio driver to speaker, and smart audio driver output receiver signals to directly go through noise limitation resistor pair to receiver (Refer to Figure 13).

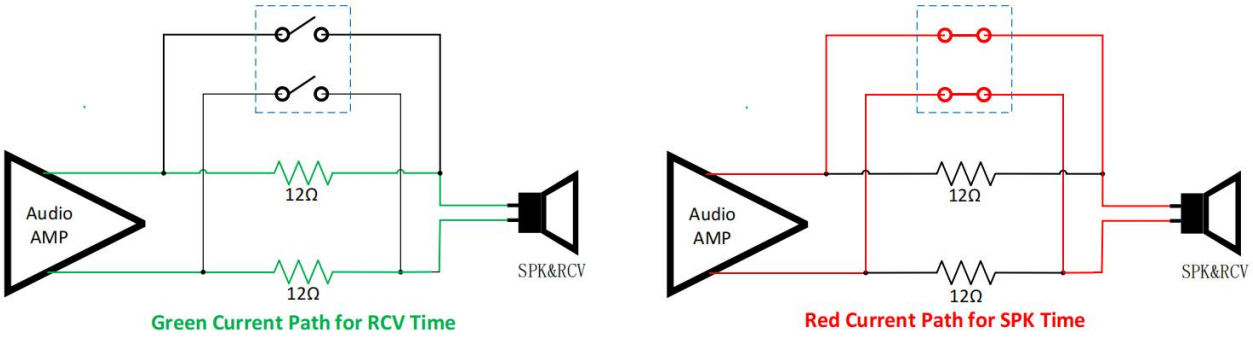

Figure 13. Typical application for smart phone receiver and speaker

9.2. Analog switch

The DZ106 is bidirectional, so NO1,2 and COM1,2 can be configured as either inputs or outputs. Due to the topology of the switch, the signal can pass over VCCEN and there's no need to integrate an external discrete component.

The DZ106 combines both enable and supply pins. The switch is on when device is powered. Connecting VCCEN to GND can turn-off the switch.

9.3. System design

When the DZ106 is on, to protect the chips from over-temperature, the switch will be turned off when the junction temperature exceeds T_{SHDN} = 140°C. The switch will be turned on again when temperature drop below 120°C. The device power dissipation capability is dependent on board design and layout. Mounting pad configuration on the PCB, the board material and the ambient temperature affect the rate of junction temperature rise for the part. When DZ106 has good thermal conductivity through the PCB, the junction temperature will be relatively low under high power through applications. The maximum dissipation the DZ106 can handle is given by:

$$P_{D(MAX)} = [T_{J(MAX)}-T_A] / \theta_{JA}$$

A ceramic about 0.1 μF capacitor is recommended and should be connected close to the VCCEN. Higher capacitance and lower ESR will improve the overall performance.

 © 2023 DIOO MICROCIRCUITS CO., LTD

10. Physical Dimensions: WLCSP-6

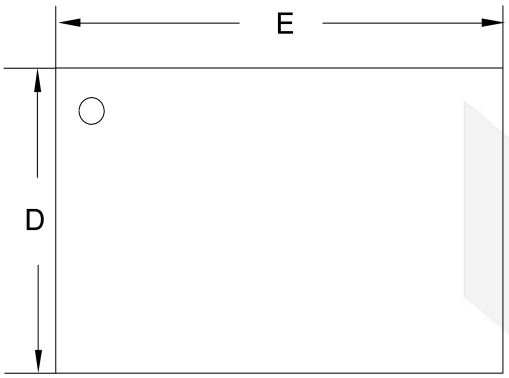

Top View
（Mark Side）

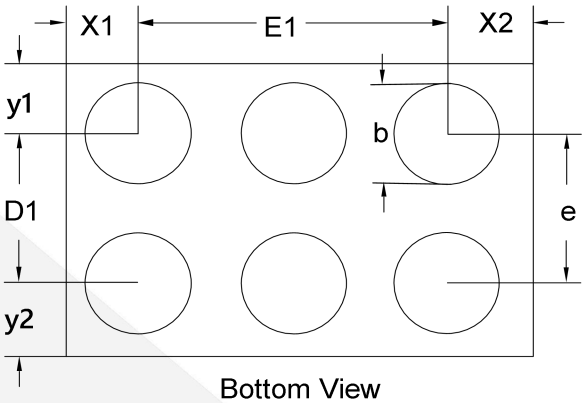

Bottom View
（Ball Side）

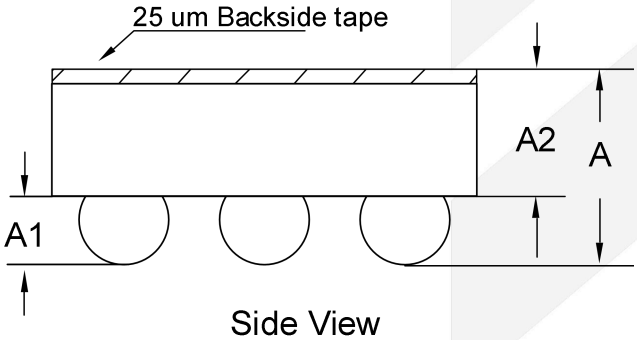

Side View

Common Dimensions (Units of measure = Millimeter)			
Symbol	**Min**	**Nom**	**Max**
A	0.534	0.574	0.614
A1	0.176	0.196	0.216
A2	0.358	0.378	0.398
D	0.795	0.815	0.835
D1	0.400 BSC		
E	1.150	1.170	1.190
E1	0.800 BSC		
b	0.240	0.260	0.280
e	0.400 BSC		
x1	0.185 REF		
x2	0.185 REF		
y1	0.208 REF		
y2	0.208 REF		

© 2023 DIOO MICROCIRCUITS CO., LTD

Disclaimer

This specification and information contained herein are provided on an “AS IS” basis and WITH ALL FAULTS. All product specifications, statements, information, and data (collectively, the“Information”) in this datasheet or made available on the website of www.dioo.com are subject to change without notice. The customer is responsible for checking and verifying the extent to which the Information contained in this publication is applicable to his/her application. All Information given herein is believed to be accurate and reliable, but it is presented without guarantee, warranty, or responsibility of any kind, express or implied.

 © 2023 DIOO MICROCIRCUITS CO., LTD