Features

- Halogen Free. “Green” Device (Note 1)
- Moisture Sensitivity Level 1
- Epoxy Meets UL 94 V-0 Flammability Rating
- Lead Free Finish/RoHS Compliant ("P" Suffix Designates RoHS Compliant. See Ordering Information)

Dual Digital Transistors

Maximum Ratings @ 25°C Unless Otherwise Specified

- Operating Junction Temperature Range: -55℃ to +150℃
- Storage Temperature Range: -55℃ to +150℃

NPN Transistor

Parameter	Symbol	Rating	Unit
Collector-Base Voltage	V_{CBO}	50	V
Collector-Emitter Voltage	V_{CEO}	50	V
Emitter-Base Voltage	V_{EBO}	10	V
Continuous Collector Current	I_C	100	mA
Power Dissipation	P_D	200	mW
Thermal Resistance Junction to Ambient	$R_{\theta JA}$	625	°C/W

PNP Transistor

Parameter	Symbol	Rating	Unit
Collector-Base Voltage	V_{CBO}	-50	V
Collector-Emitter Voltage	V_{CEO}	-50	V
Emitter-Base Voltage	V_{EBO}	-10	V
Continuous Collector Current	I_C	-100	mA
Power Dissipation	P_D	200	mW
Thermal Resistance Junction to Ambient	$R_{\theta JA}$	625	°C/W

Note: 1. Halogen free "Green” products are defined as those which contain <900ppm bromine, <900ppm chlorine (<1500ppm total Br + Cl) and <1000ppm antimony compounds.

Marking: D3

Internal Structure

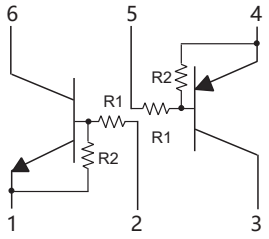

Special packing as below

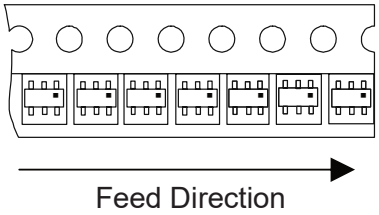

Feed Direction

SOT-563

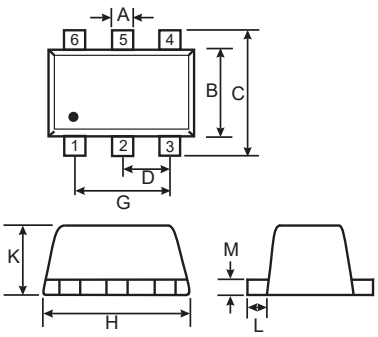

DIMENSIONS					
DIM	INCHES		MM		NOTE
	MIN	MAX	MIN	MAX	
A	0.006	0.011	0.15	0.30	
B	0.043	0.051	1.10	1.30	
C	0.059	0.067	1.50	1.70	
D	0.020		0.50		TYP.
G	0.035	0.043	0.90	1.10	
H	0.059	0.067	1.50	1.70	
K	0.022	0.026	0.55	0.65	
L	0.004	0.011	0.10	0.30	
M	0.004	0.007	0.10	0.18	

Electrical Characteristics @ T_A=25°C Unless Otherwise Specified

NPN Transistor

Parameter	Symbol	Min	Typ	Max	Unit	Conditions
Input Voltage	$V_{I(off)}$	0.5	---	---	V	V_{CC}=5V, I_O=100μA
	$V_{I(on)}$	---	---	3.0	V	V_O=0.3V, I_O=10mA
Output Voltage	$V_{O(on)}$	---	---	0.3	V	I_O=10mA,I_I=0.5mA
Input Current	I_I	---	---	0.88	mA	V_I=5V
Output Current	$I_{O(off)}$	---	---	0.5	μA	V_{CC}=50V, V_I=0
DC Current Gain	G_I	30	---	---		V_O=5V, I_O=5mA
Input Resistance	R_1	7.0	10	13	KΩ	
Resistance Ratio	R_2/R_1	0.8	1.0	1.2		
Transition Frequency	f_T	---	250	---	MHz	V_{CE}=10V, I_E=5mA, f=100MHz

PNP Transistor

Parameter	Symbol	Min	Typ	Max	Unit	Conditions
Input Voltage	$V_{I(off)}$	-0.5	---	---	V	V_{CC}=-5V, I_O=-100μA
	$V_{I(on)}$	---	---	-3.0	V	V_O=-0.3V, I_O=-10mA
Output Voltage	$V_{O(on)}$	---	---	-0.3	V	I_O=-10mA,I_I=-0.5mA
Input Current	I_I	---	---	-0.88	mA	V_I=-5V
Output Current	$I_{O(off)}$	---	---	-0.5	μA	V_{CC}=-50V, V_I=0
DC Current Gain	G_I	30	---	---		V_O=-5V, I_O=-5mA
Input Resistance	R_1	7	10	13	KΩ	
Resistance Ratio	R_2/R_1	0.8	1.0	1.2		
Transition Frequency	f_T	---	250	---	MHz	V_{CE}=-10V, I_E=-5mA, f=100MHz

Curve Characteristics(NPN)

Fig. 1 - DC Current Gain Characteristics

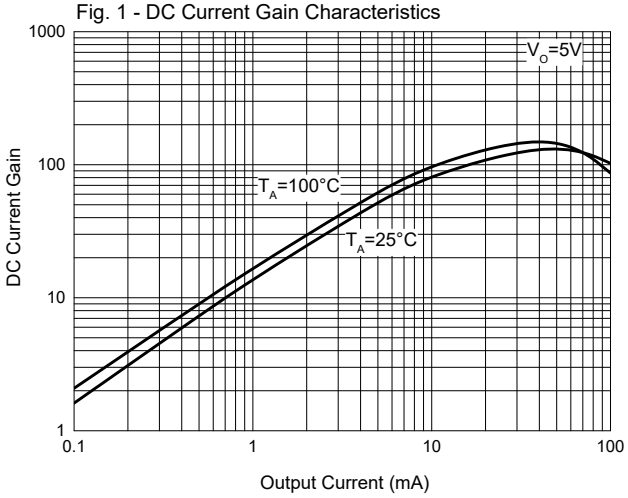

Fig. 2 - Input Voltage (on) Characteristics

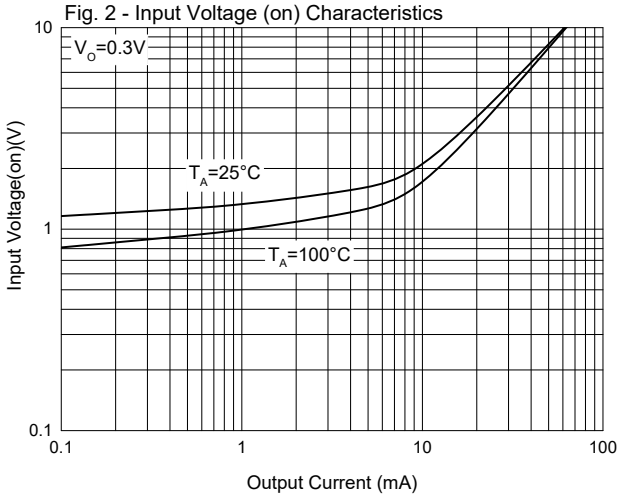

Fig. 3 - Input Voltage (off) Characteristics

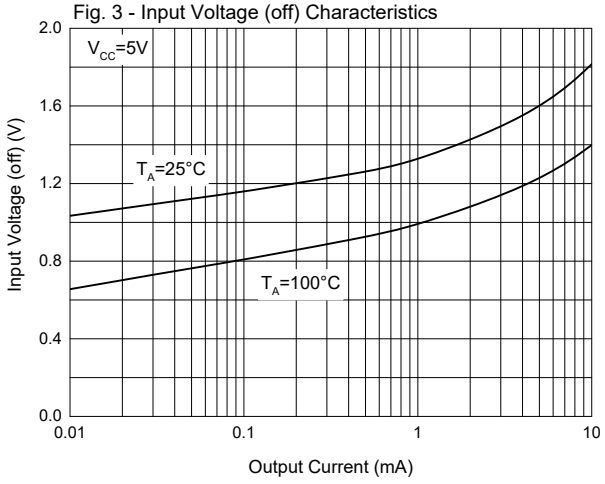

Fig. 4 - Output Voltage Characteristics

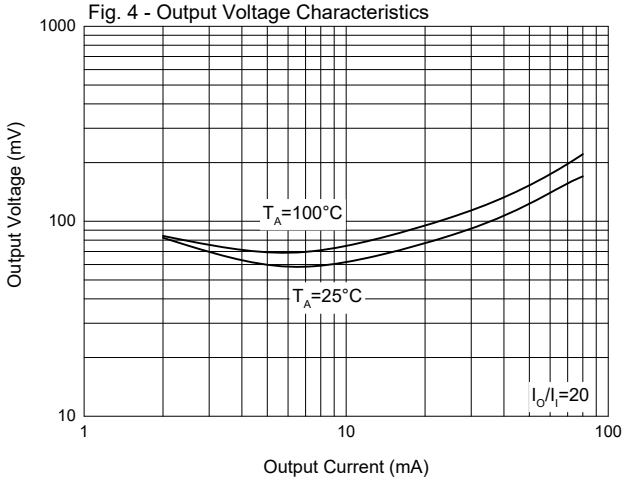

Curve Characteristics(PNP)

Fig. 1 - DC Current Gain Characteristics

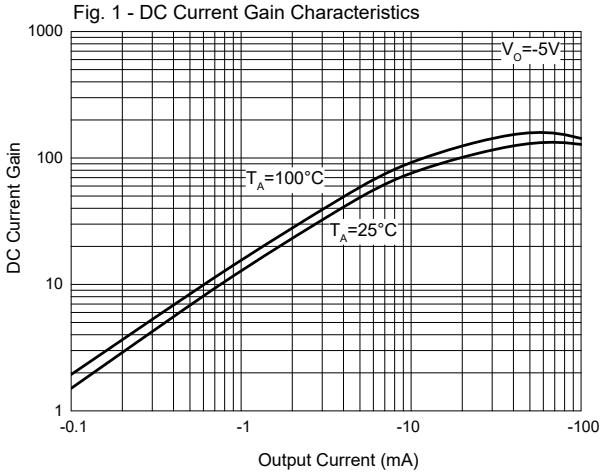

Fig. 2 - Input Voltage (on) Characteristics

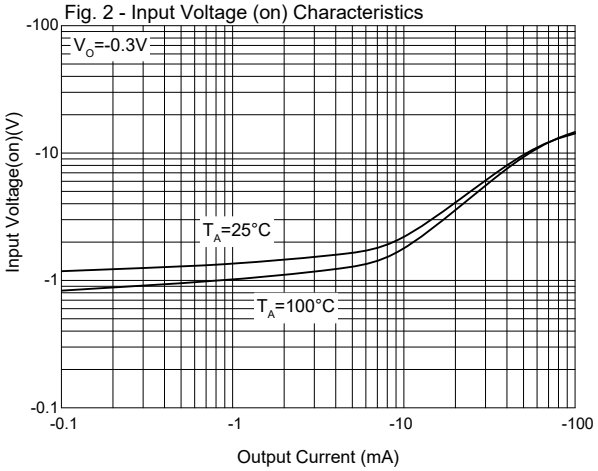

Fig. 3 - Input Voltage (off) Characteristics

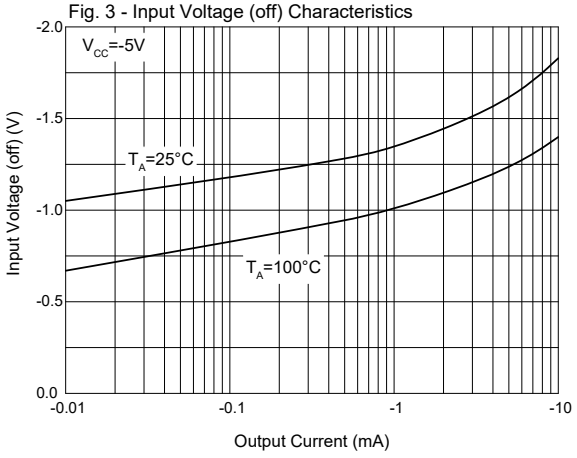

Fig. 4 - Output Voltage Characteristics

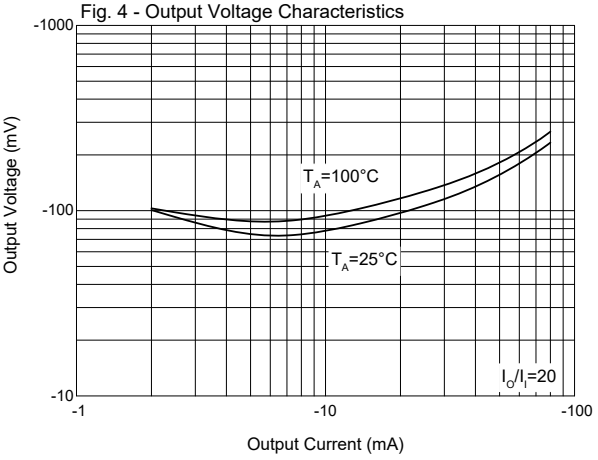

Ordering Information

Device	Packing
EMD3-TPQ2	Tape&Reel: 3Kpcs/Reel

*****IMPORTANT NOTICE*****

Micro Commercial Components Corp. reserves the right to make changes without further notice to any product herein to make corrections, modifications , enhancements , improvements , or other changes . ***Micro Commercial Components Corp*** . does not assume any liability arising out of the application or use of any product described herein; neither does it convey any license under its patent rights ,nor the rights of others . The user of products in such applications shall assume all risks of such use and will agree to hold ***Micro Commercial Components Corp*** . and all the companies whose products are represented on our website, harmless against all damages. ***Micro Commercial Components Corp***. products are sold subject to the general terms and conditions of commercial sale, as published at **https://www.mccsemi.com/Home/TermsAndConditions.**

*****LIFE SUPPORT*****

MCC's products are not authorized for use as critical components in life support devices or systems without the express written approval of Micro Commercial Components Corporation.

*****CUSTOMER AWARENESS*****

Counterfeiting of semiconductor parts is a growing problem in the industry. Micro Commercial Components (MCC) is taking strong measures to protect ourselves and our customers from the proliferation of counterfeit parts. MCC strongly encourages customers to purchase MCC parts either directly from MCC or from Authorized MCC Distributors who are listed by country on our web page cited below. Products customers buy either from MCC directly or from Authorized MCC Distributors are genuine parts, have full traceability, meet MCC's quality standards for handling and storage. **MCC will not provide any warranty coverage or other assistance for parts bought from Unauthorized Sources**. MCC is committed to combat this global problem and encourage our customers to do their part in stopping this practice by buying direct or from authorized distributors.