## Features

| $V_{DSS}$ | $R_{DS(ON)}$ @10V (typ) | $I_D$ |
|---|---|---|
| 200V | 0.136Ω | 18A |

- Fast switching
- 100% avalanche tested
- Improved dv/dt capability
- RoHS Compliant

## Application

- DC-DC & DC-AC Converters for telecom, industrial and consumer environment
- Uninterruptible Power Supply (UPS)
- Switch Mode Low Power Supplies
- Industrial Actuators

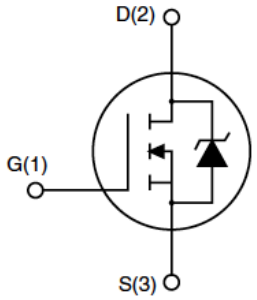








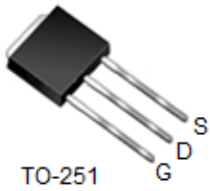


## Ordering Information

| Part Number | Marking | Case | Packaging |
|---|---|---|---|
| 18N20 | 18N20 | TO-252 | 2500pcs/Reel |
| 18N20T | 18N20 | TO-220 | 50pcs/Tube |
| 18N20J | 18N20 | TO-251 | 75pcs/Tube |

## Absolute Maximum Ratings $T_C$=25℃ unless otherwise specified

| Symbol | Parameter | | Max. | | | Units |
|---|---|---|---|---|---|---|
| | | | TO-220 | TO-251 | TO-252 | |
| $V_{DSS}$ | Drain-Source Voltage | | 200 | | | V |
| $V_{GSS}$ | Gate-Source Voltage | | ± 30 | | | V |
| $I_D$ | Continuous Drain Current | $T_C$ = 25℃ | 18 | 18* | 18* | A |
| | | $T_C$ = 100℃ | 11.45 | 11.45* | 11.45* | A |
| $I_{DM}$ | Pulsed Drain Current note1 | | 72 | 72* | 72* | A |
| $E_{AS}$ | Single Pulsed Avalanche Energy note2 | | 320 | | | mJ |
| dv/dt | Peak Diode Recovery Energy note3 | | 8 | | | V/ns |
| $P_D$ | Power Dissipation | $T_C$ = 25℃ | 110 | 65.8 | 65.8 | W |
| | Linear Derating Factor | $T_C$ > 25℃ | 0.89 | 0.53 | 0.53 | W/℃ |
| $R_{\theta JC}$ | Thermal Resistance, Junction to Case | | 1.12 | 1.9 | 1.9 | ℃/W |
| $T_J$, $T_{STG}$ | Operating and Storage Temperature Range | | -55 to +150 | | | ℃ |

*Drain current limited by maximum junction temperature

## Electrical Characteristics $T_C$=25℃ unless otherwise specified

| Symbol | Parameter | Test Condition | Min. | Typ. | Max. | Units |
|---|---|---|---|---|---|---|
| **Off Characteristic** | | | | | | |
| $V_{(BR)DSS}$ | Drain-Source Breakdown Voltage | $V_{GS}$ = 0V,$I_D$ = 250Ma | 200 | - | - | V |
| $\triangle V_{(BR)DSS}$ /$\triangle T_J$ | Breakdown Voltage Temperature Coefficient | Reference to 25℃, $I_D$ = 250μA | - | 0.3 | - | V/℃ |
| $I_{DSS}$ | Zero Gate Voltage Drain Current | $V_{DS}$ = 200V, $V_{GS}$ = 0V | - | - | 1 | μA |
| | | $V_{DS}$ = 160V, $T_C$ = 125℃ | - | - | 10 | μA |
| $I_{GSS}$ | Gate to Body Leakage Current | $V_{DS}$ = 0V, $V_{GS}$ = ±20V | - | - | ±100 | nA |
| **On Characteristics** | | | | | | |
| $V_{GS(th)}$ | Gate Threshold Voltage note4 | $V_{DS}$ = $V_{GS}$, $I_D$ = 250μA | 1 | - | 3 | V |
| $R_{DS(on)}$ | Static Drain-Source On-Resistance | $V_{GS}$ =10V, $I_D$ = 9A | - | 0.136 | 0.16 | Ω |
| $g_{FS}$ | Forward Transconductance | $V_{DS}$ =30V, $I_D$ = 9A | - | 8 | - | S |
| **Dynamic Characteristics** | | | | | | |
| $C_{iss}$ | Input Capacitance | $V_{DS}$ = 25V, $V_{GS}$ = 0V, f = 1.0MHz | - | 836 | - | pF |
| $C_{oss}$ | Output Capacitance | | - | 81.2 | - | pF |
| $C_{rss}$ | Reverse Transfer Capacitance | | - | 3.81 | - | pF |
| $Q_g$ | Total Gate Charge | $V_{DD}$ = 160V, $I_D$ = 18A, $V_{GS}$ = 10V | - | 17.7 | - | nC |
| $Q_{gs}$ | Gate-Source Charge | | - | 3.9 | - | nC |
| $Q_{gd}$ | Gate-Drain(“Miller”) Charge | | - | 5.2 | - | nC |
| **Switching Characteristics** | | | | | | |
| $t_{d(on)}$ | Turn-On Delay Time | $V_{DD}$ = 100V, $I_D$ = 18A, $R_G$ = 5Ω, $V_{GS}$ = 10V | - | 12.3 | - | ns |
| $t_r$ | Turn-On Rise Time | | - | 21.1 | - | ns |
| $t_{d(off)}$ | Turn-Off Delay Time | | - | 22.5 | - | ns |
| $t_f$ | Turn-Off Fall Time | | - | 7.7 | - | ns |
| **Drain-Source Diode Characteristics and Maximum Ratings** | | | | | | |
| $I_S$ | Maximum Continuous Drain to Source Diode Forward Current | | - | - | 18 | A |
| $I_{SM}$ | Maximum Pulsed Drain to Source Diode Forward Current | | - | - | 72 | A |
| $V_{SD}$ | Drain to Source Diode Forward Voltage | $V_{GS}$ = 0V, $I_S$ = 9A | - | - | 1.5 | V |
| $t_{rr}$ | Reverse Recovery Time | $V_{GS}$ = 0V, $I_F$ = 18A, di/dt =100A/μs | - | 235 | - | ns |
| $Q_{rr}$ | Reverse Recovery Charge | | - | 1045 | - | nC |

Notes:

1. Repetitive Rating: Pulse width limited by maximum junction temperature
2. L = 10mH, $I_{AS}$ = 8A, $V_{DD}$ = 50V, $R_G$ = 25Ω, Starting $T_J$ = 25℃
3. $I_{SD}$ ≤ 18A, di/dt ≤ 200A/μs, $V_{DD}$ ≤ $B_{VDSS}$, Starting $T_J$ = 25℃
4. Pulse width ≤ 300μs; duty cycle ≤ 2%.

## Typical Performance Characteristics

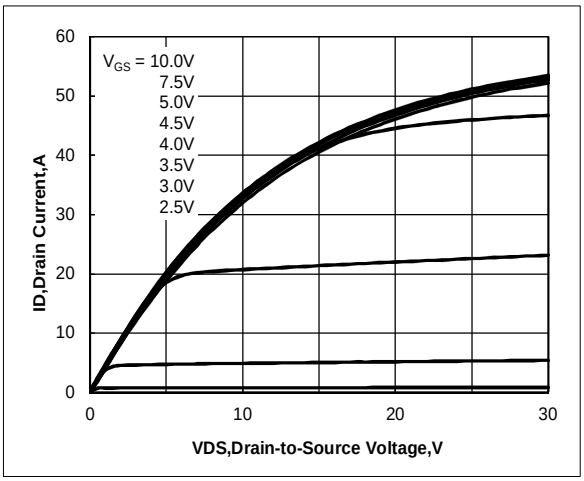


Figure 1. Output Characteristics

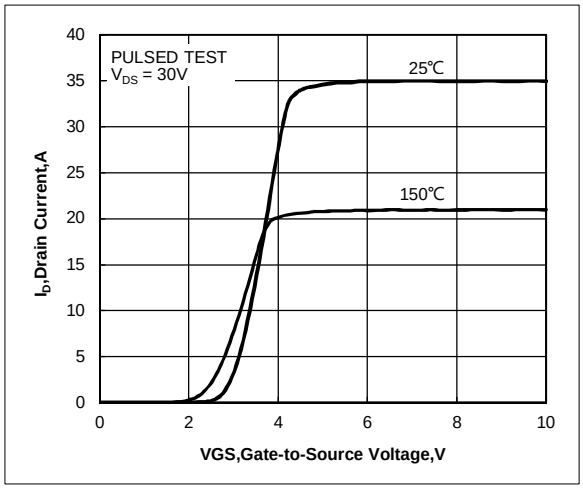


Figure 2. Transfer Characteristics

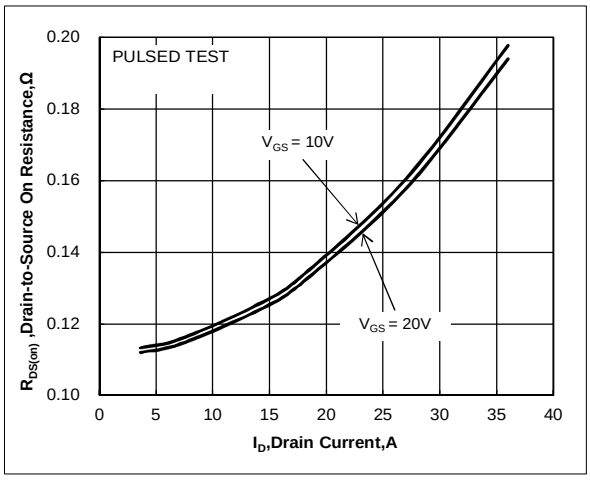


Figure 3. Drain-to-Source On Resistance vs. Drain Current and Gate Voltage

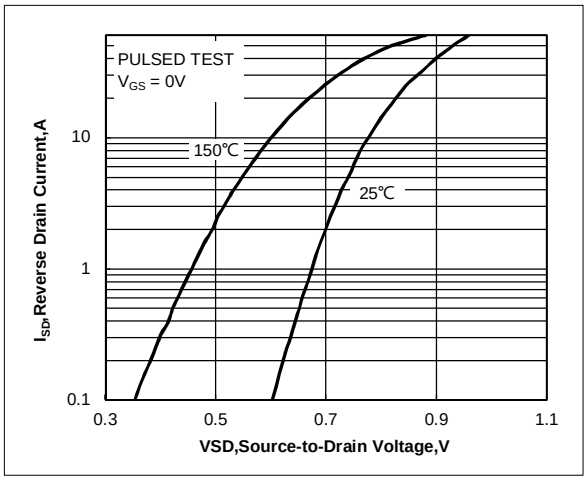


Figure 4. Body Diode Forward Voltage vs. Source Current and Temperature

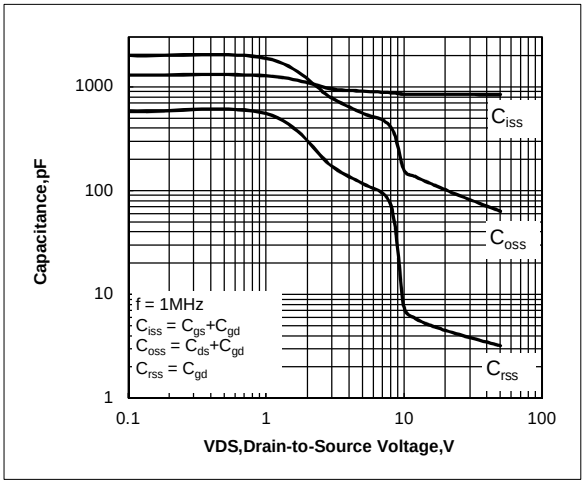


Figure 5. Capacitance Characteristics

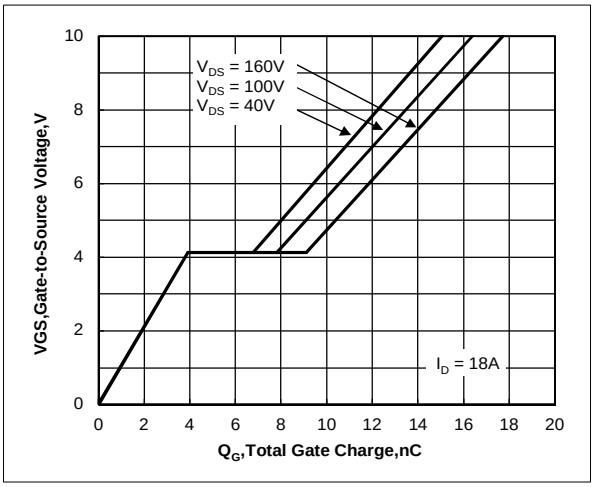


Figure 6. Gate Charge Characteristics

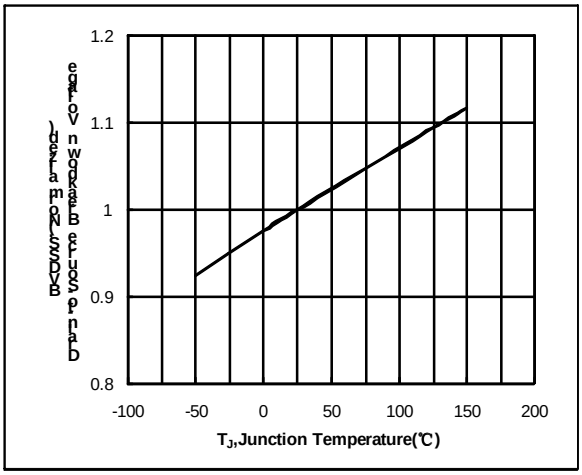


Figure 7. Normalized Breakdown Voltage vs. Junction Temperature

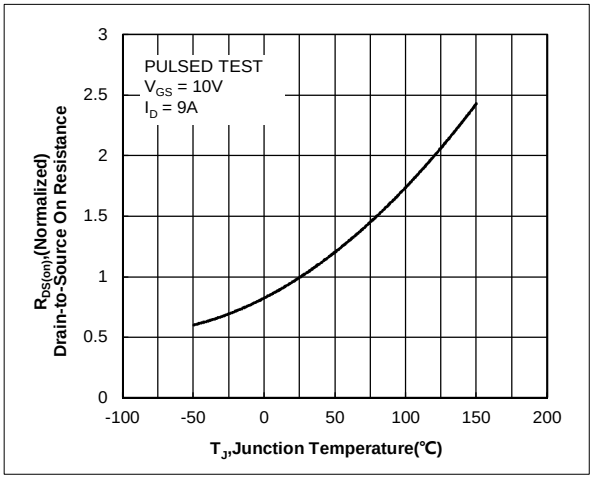


Figure 8. Normalized On Resistance vs. Junction Temperature

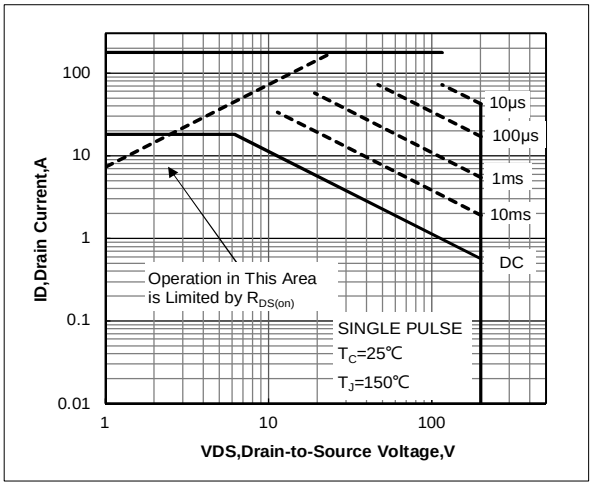


Figure 9. Maximum Safe Operating Area

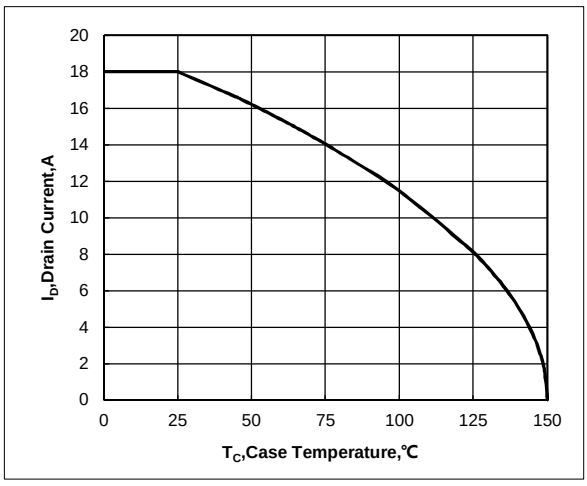


Figure 10. Maximum Continuous Drain Current vs. Case Temperature

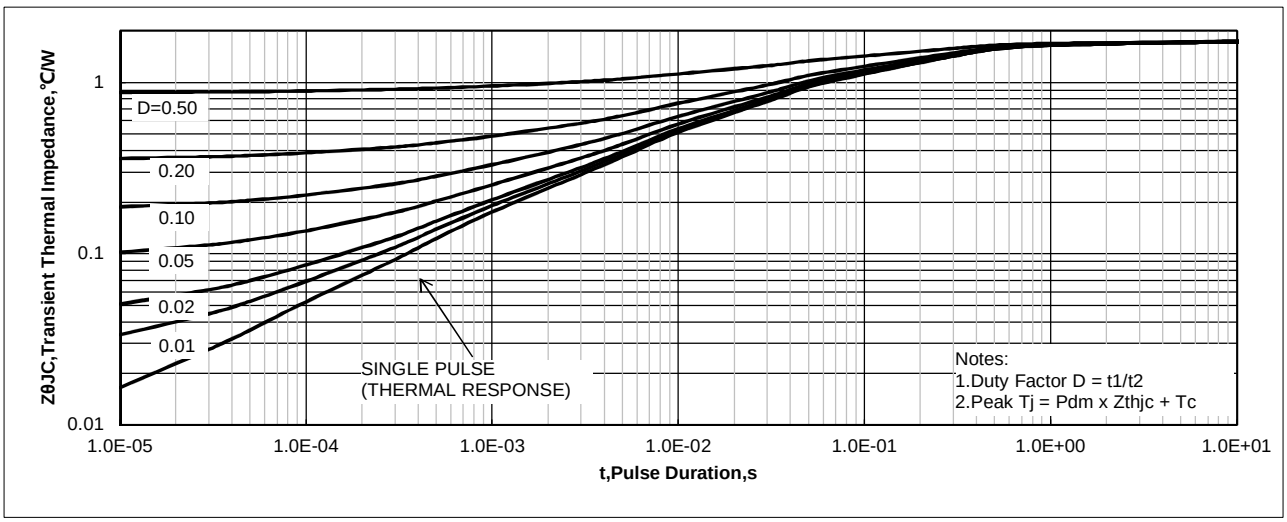


Figure 11. Maximum Effective Transient Thermal Impedance, Junction-to-Case

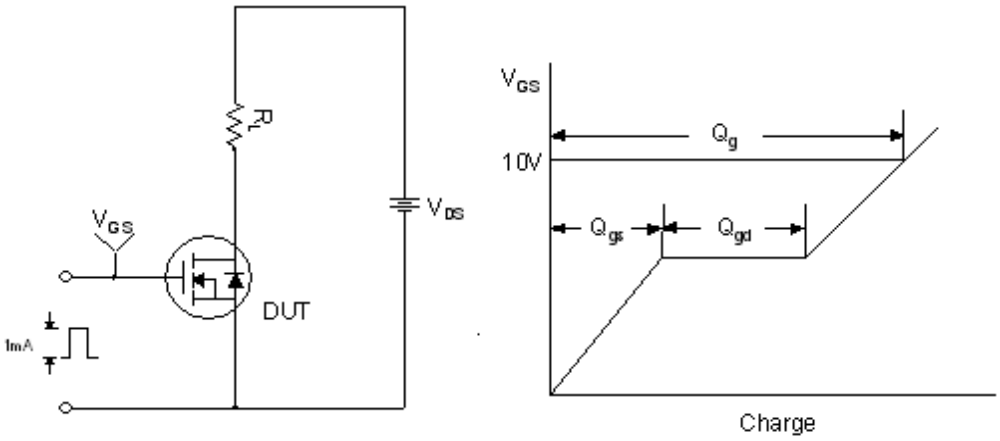


**Figure 12. Gate Charge Test Circuit & Waveform**

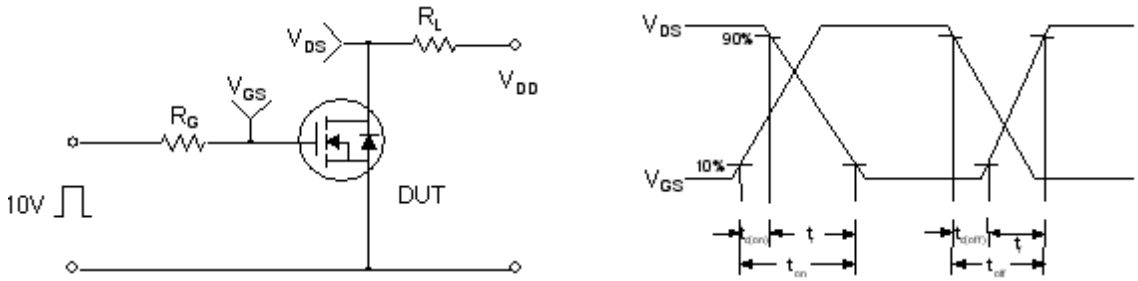


**Figure 13. Resistive Switching Test Circuit & Waveforms**

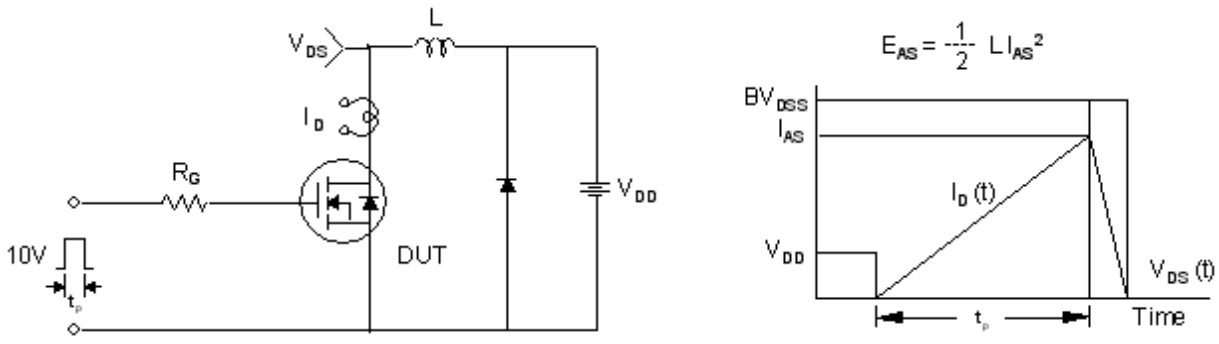


**Figure 14. Unclamped Inductive Switching Test Circuit & Waveforms**

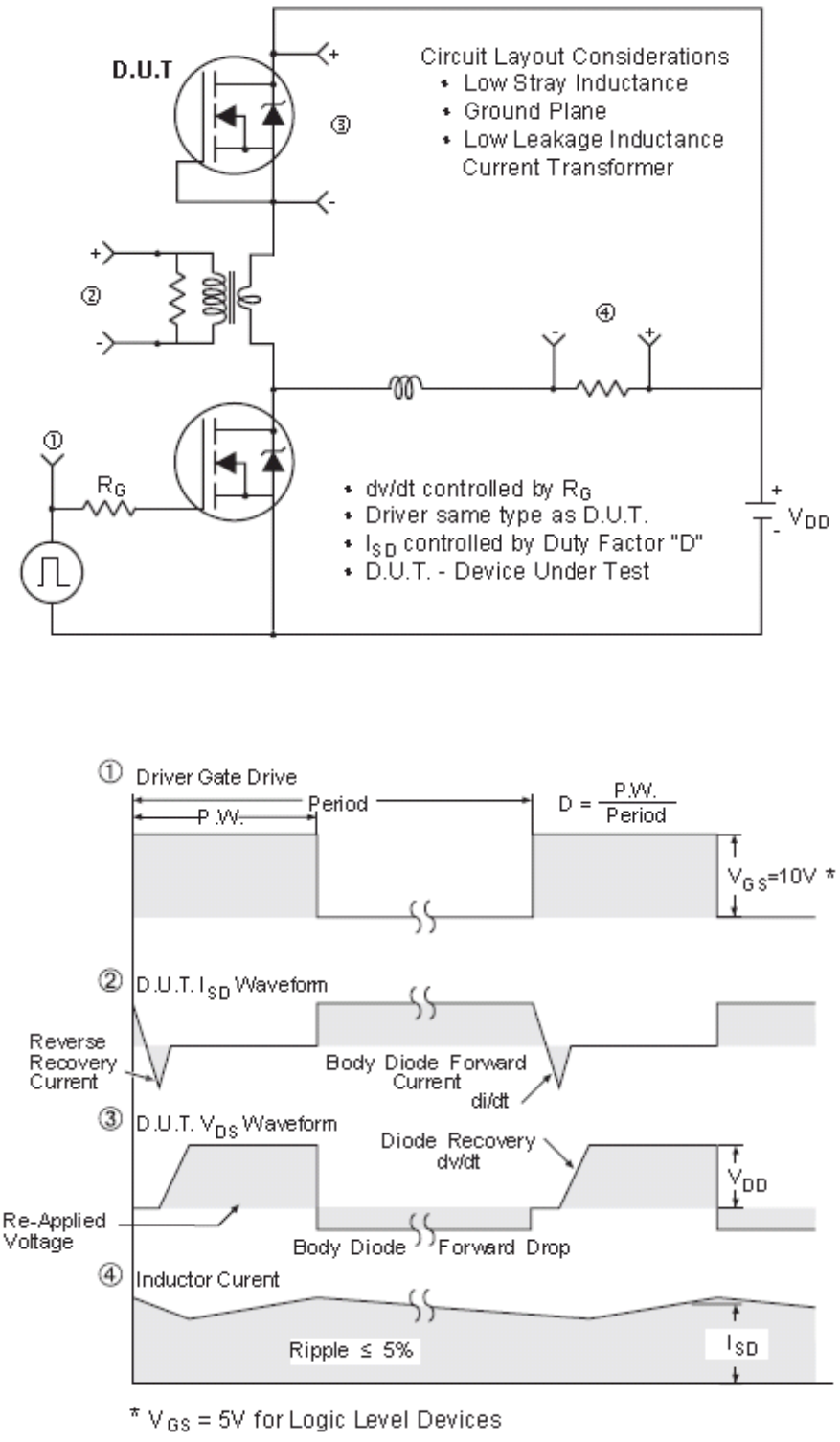


**Figure 15. Peak Diode Recovery dv/dt Test Circuit & Waveforms (For N-channel)**

# TO-252 Package information

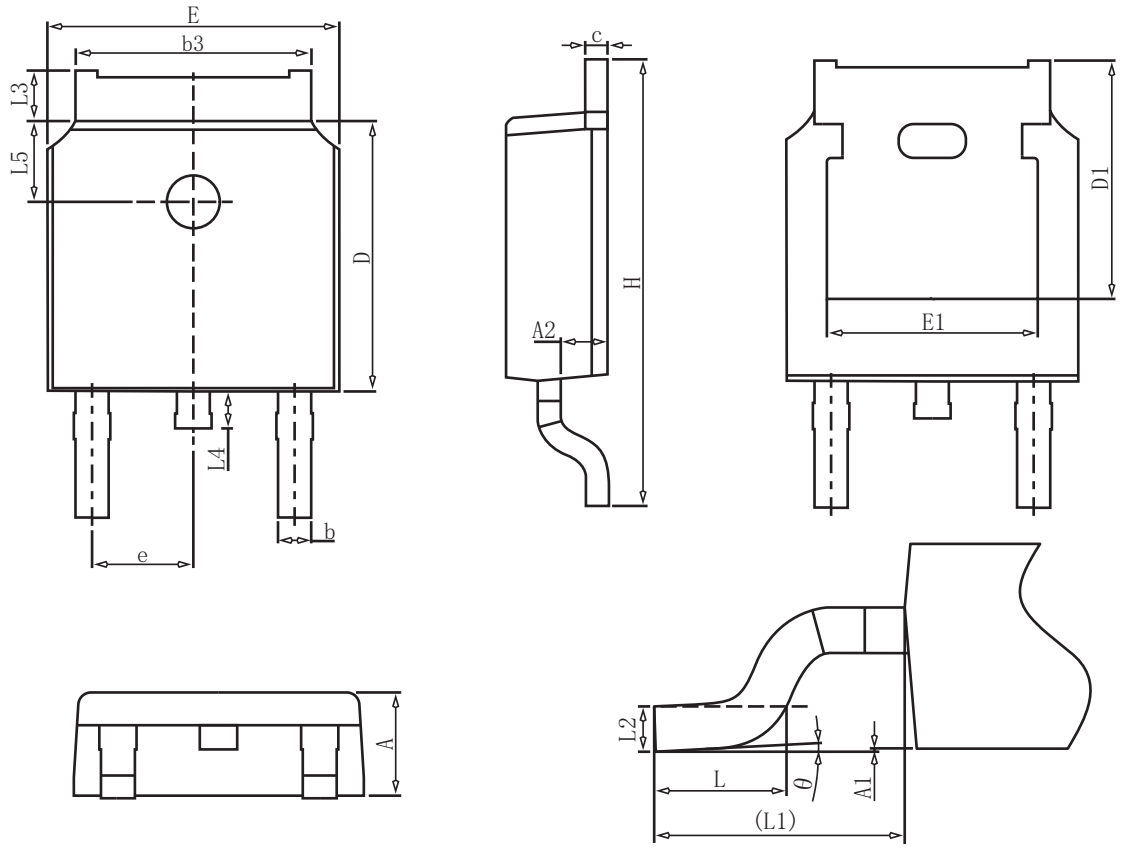


COMMON DIMENSIONS

| SYMBOL | mm | | |
|---|---|---|---|
| | MIN | NOM | MAX |
| A | 2.20 | 2.30 | 2.40 |
| A1 | 0.00 | – | 0.20 |
| A2 | 0.97 | 1.07 | 1.17 |
| b | 0.68 | 0.78 | 0.90 |
| b3 | 5.20 | 5.33 | 5.50 |
| c | 0.43 | 0.53 | 0.63 |
| D | 5.98 | 6.10 | 6.22 |
| D1 | | 5.30REF | |
| E | 6.40 | 6.60 | 6.80 |
| E1 | 4.63 | – | – |
| e | | 2.286BSC | |
| H | 9.40 | 10.10 | 10.50 |
| L | 1.38 | 1.50 | 1.75 |
| L1 | | 2.90REF | |
| L2 | | 0.51BSC | |
| L3 | 0.88 | – | 1.28 |
| L4 | 0.50 | – | 1.00 |
| L5 | 1.65 | 1.80 | 1.95 |
| θ | 0° | – | 8° |

# TO-251 Package information

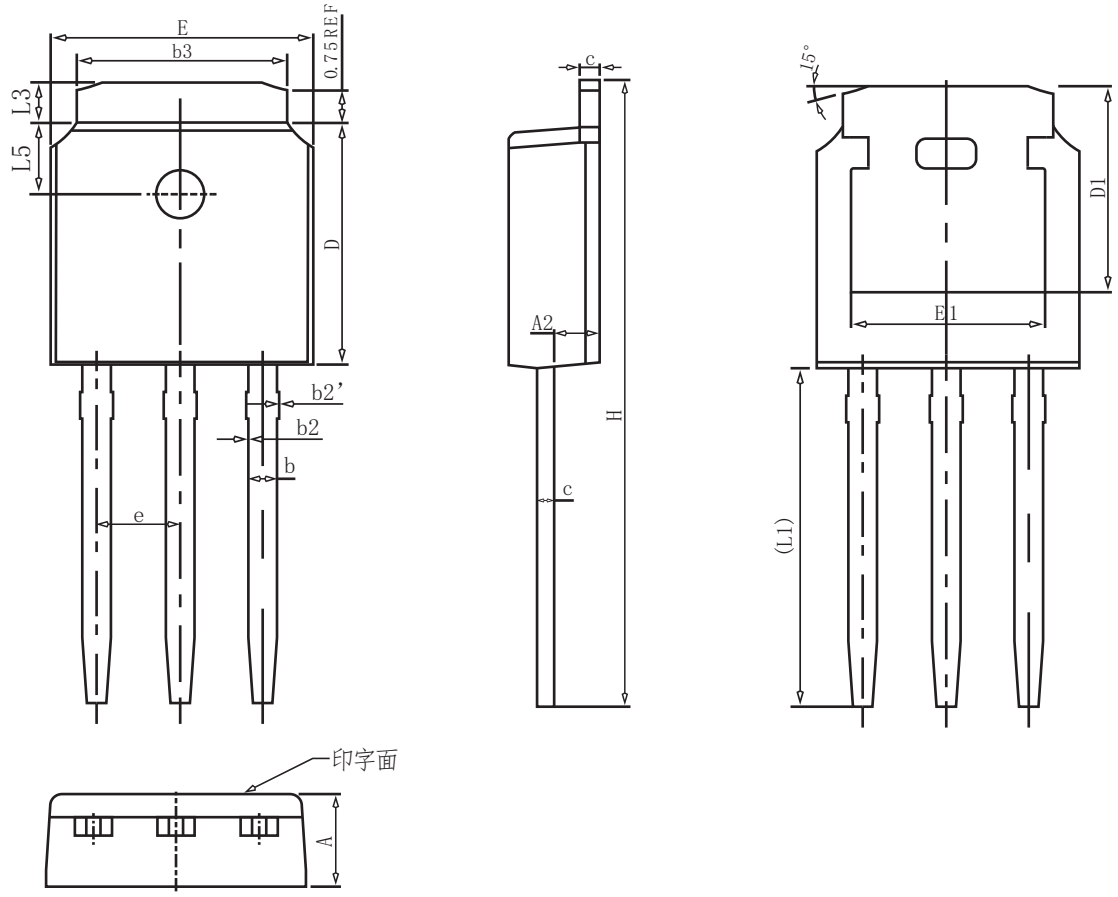


COMMON DIMENSIONS

| SYMBOL | mm | | |
|---|---|---|---|
| | MIN | NOM | MAX |
| A | 2.20 | 2.30 | 2.40 |
| A2 | 0.97 | 1.07 | 1.17 |
| b | 0.68 | 0.78 | 0.90 |
| b2 | 0.00 | 0.04 | 0.10 |
| b2' | 0.00 | 0.04 | 0.10 |
| b3 | 5.20 | 5.33 | 5.50 |
| c | 0.43 | 0.53 | 0.63 |
| D | 5.98 | 6.10 | 6.22 |
| D1 | 5.30REF | | |
| E | 6.40 | 6.60 | 6.80 |
| E1 | 4.63 | – | – |
| e | 2.286BSC | | |
| H | 16.22 | 16.52 | 16.82 |
| L1 | 9.15 | 9.40 | 9.65 |
| L3 | 0.88 | 1.02 | 1.28 |
| L5 | 1.65 | 1.80 | 1.95 |

## TO-220 Package information

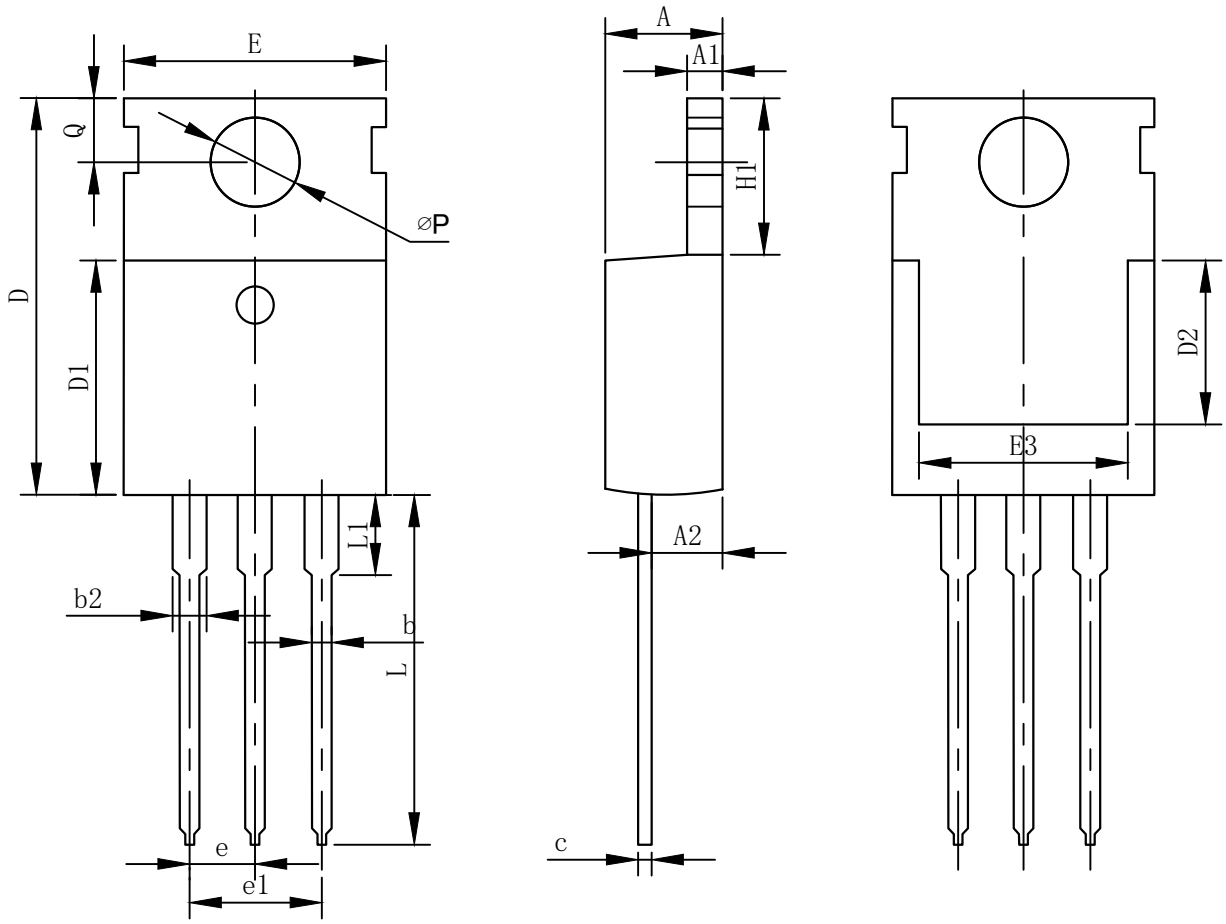


COMMONDIMENSIONS

| SYMBO | mm | | |
|---|---|---|---|
| | MIN | NOM | MAX |
| A | 4.37 | 4.57 | 4.70 |
| A1 | 1.25 | 1.30 | 1.40 |
| A2 | 2.20 | 2.40 | 2.60 |
| b | 0.70 | 0.80 | 0.95 |
| b2 | 1.70 | 1.27 | 1.47 |
| c | 0.45 | 0.50 | 0.60 |
| D | 15.10 | 15.60 | 16.10 |
| D1 | 8.80 | 9.10 | 9.40 |
| D2 | 5.50 | - | - |
| E | 9.70 | 10.00 | 10.30 |
| E3 | 7.00 | - | - |
| e | 2.54BSC | | |
| e1 | 5.08BSC | | |
| H1 | 6.25 | 6.50 | 6.85 |
| L | 12.75 | 13.50 | 13.80 |
| L1 | - | 3.10 | 3.40 |
| ⌀P | 3.40 | 3.60 | 3.80 |
| Q | 2.60 | 2.80 | 3.00 |