Description

The G100N04T uses advanced trench technology and design to provide excellent $R_{DS(ON)}$ with low gate charge. It can be used in a wide variety of applications.

General Features

V_{DSS}	$R_{DS(ON)}$ @4.5V (Typ)	$R_{DS(ON)}$ @10V (Typ)	I_D
40V	7mΩ	5.2mΩ	100A

- High density cell design for ultra low Rdson
- Fully characterized avalanche voltage and current
- Good stability and uniformity with high E_{AS}
- Excellent package for good heat dissipation
- RoHS Compliant

Application

- PWM
- Load Switching

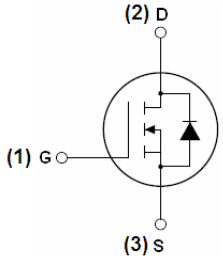

Schematic diagram

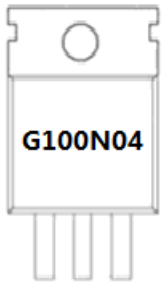

Marking and pin assignment



Ordering Information

Part Number	Marking	Case	Packaging
G100N04T	G100N04	TO-220	50pcs/Tube

Absolute Maximum Ratings (T_C=25℃unless otherwise noted)

Parameter	Symbol	Limit	Unit
Drain-Source Voltage	V_{DS}	40	V
Gate-Source Voltage	V_{GS}	±20	V
Drain Current-Continuous	I_D	100	A
Drain Current-Continuous(T_C=100℃)	I_D (100℃)	70	A
Pulsed Drain Current	I_{DM}	350	A
Maximum Power Dissipation	P_D	90	W
Derating factor		0.6	W/℃
Single pulse avalanche energy (Note 5)	E_{AS}	670	mJ
Operating Junction and Storage Temperature Range	T_J,T_{STG}	-55 To 175	℃

Thermal Characteristic

Thermal Resistance,Junction-to-Case (Note 2)	$R_{\theta JC}$	1.67	℃/W

Electrical Characteristics (T_C=25℃unless otherwise noted)

Parameter	Symbol	Condition	Min	Typ	Max	Unit
Off Characteristics						
Drain-Source Breakdown Voltage	BV_{DSS}	V_{GS}=0V I_D=250μA	40	45	-	V
Zero Gate Voltage Drain Current	I_{DSS}	V_{DS}=40V,V_{GS}=0V	-	-	1	μA
Gate-Body Leakage Current	I_{GSS}	V_{GS}=±20V,V_{DS}=0V	-	-	±100	nA
On Characteristics (Note 3)						
Gate Threshold Voltage	$V_{GS(th)}$	V_{DS}=V_{GS},I_D=250μA	1.2	1.5	1.9	V
Drain-Source On-State Resistance	$R_{DS(ON)}$	V_{GS}=10V, I_D=20A	-	5.2	6.5	mΩ
Drain-Source On-State Resistance	$R_{DS(ON)}$	V_{GS}=4.5V, I_D=20A	-	7.0	8.5	mΩ
Forward Transconductance	g_{FS}	V_{DS}=10V,I_D=20A	15	-	-	S
Dynamic Characteristics (Note4)						
Input Capacitance	C_{lss}	V_{DS}=20V,V_{GS}=0V, F=1.0MHz	-	4010	-	PF
Output Capacitance	C_{oss}		-	750	-	PF
Reverse Transfer Capacitance	C_{rss}		-	390	-	PF
Switching Characteristics (Note 4)						
Turn-on Delay Time	$t_{d(on)}$	V_{DD}=20V, R_L=1Ω V_{GS}=10V,R_G=3Ω	-	11	-	nS
Turn-on Rise Time	t_r		-	10	-	nS
Turn-Off Delay Time	$t_{d(off)}$		-	38	-	nS
Turn-Off Fall Time	t_f		-	11	-	nS
Total Gate Charge	Q_g	V_{DS}=20V,I_D=20A, V_{GS}=10V	-	50	-	nC
Gate-Source Charge	Q_{gs}		-	12	-	nC
Gate-Drain Charge	Q_{gd}		-	13	-	nC
Drain-Source Diode Characteristics						
Diode Forward Voltage (Note 3)	V_{SD}	V_{GS}=0V,I_S=10A	-	-	1.2	V
Diode Forward Current (Note 2)	I_S		-	-	80	A
Reverse Recovery Time	t_{rr}	TJ = 25℃, IF = 20A di/dt = 100A/μs (Note3)	-	33	-	nS
Reverse Recovery Charge	Qrr		-	34	-	nC
Forward Turn-On Time	t_{on}	Intrinsic turn-on time is negligible (turn-on is dominated by LS+LD)				

Notes:

1. Repetitive Rating: Pulse width limited by maximum junction temperature.
2. Surface Mounted on FR4 Board, t ≤ 10 sec.
3. Pulse Test: Pulse Width ≤ 300μs, Duty Cycle ≤ 2%.
4. Guaranteed by design, not subject to production
5. E_{AS} condition : Tj=25℃,V_{DD}=20V,V_G=10V,L=1mH,Rg=25Ω，I_{AS}=36A

Test circuit

1) E_{AS} Test Circuit

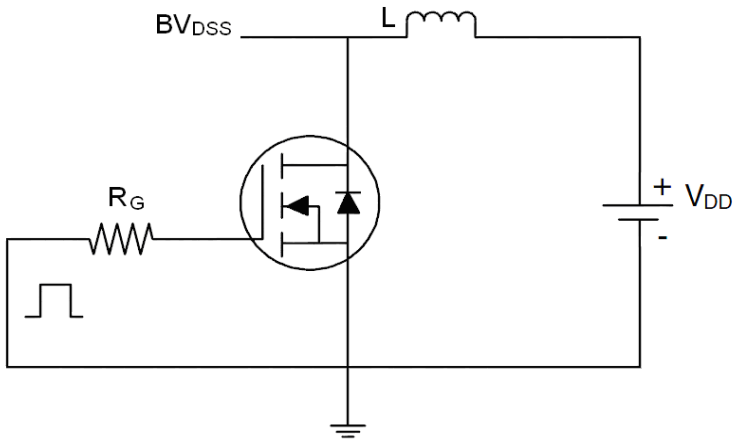

2) Gate Charge Test Circuit

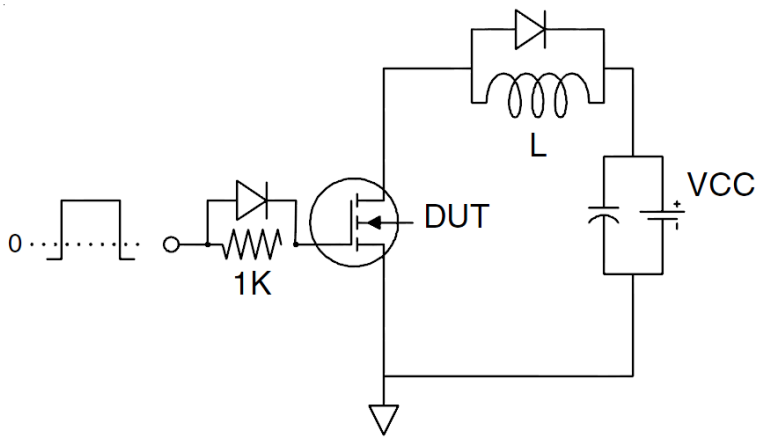

3) Switch Time Test Circuit

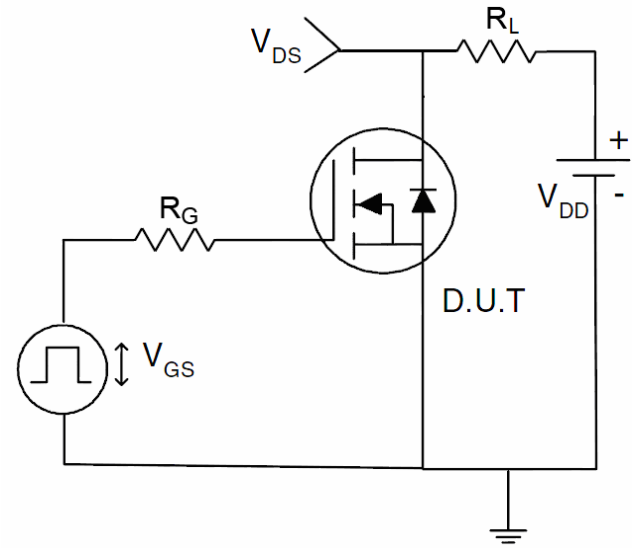

Typical Electrical and Thermal Characteristics (Curves)

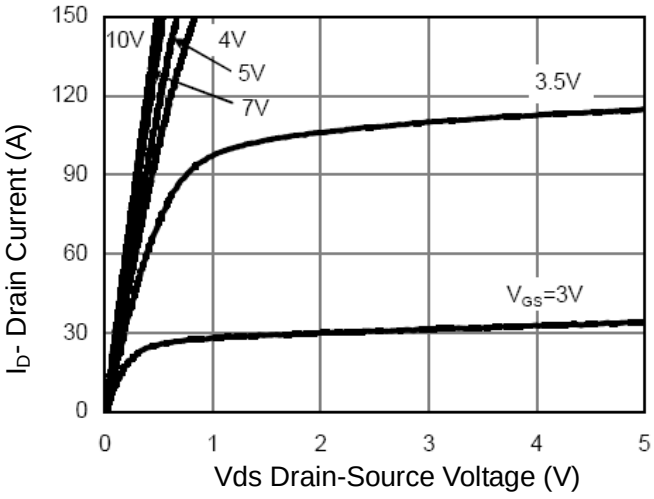

Figure 1 Output Characteristics

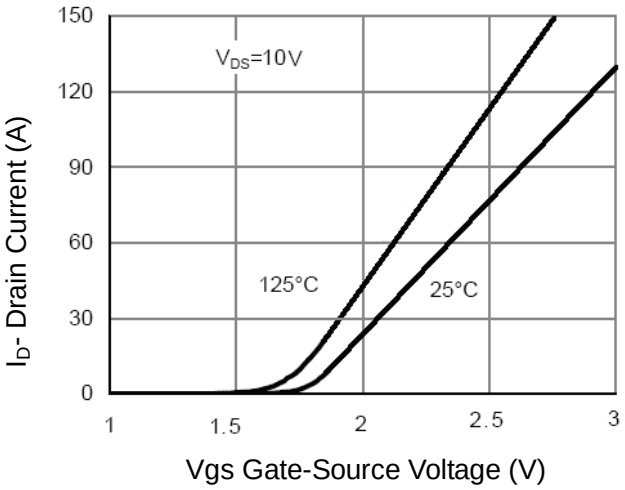

Figure 2 Transfer Characteristics

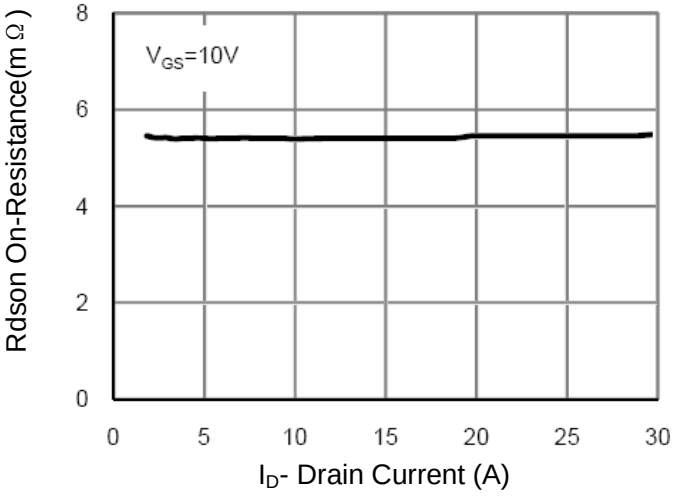

Figure 3 Rdson- Drain Current

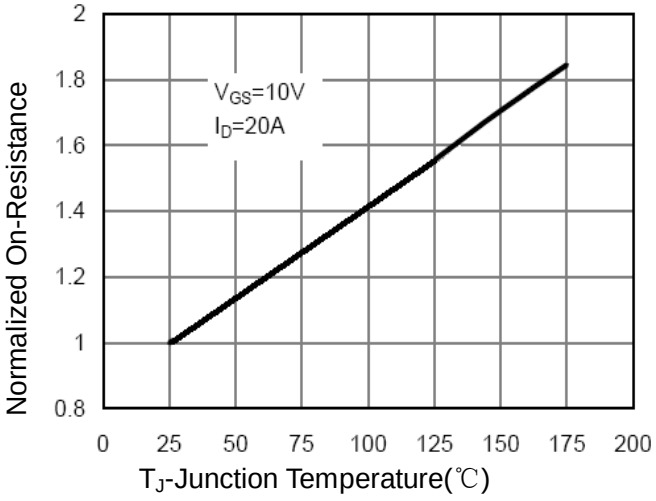

Figure 4 Rdson-JunctionTemperature

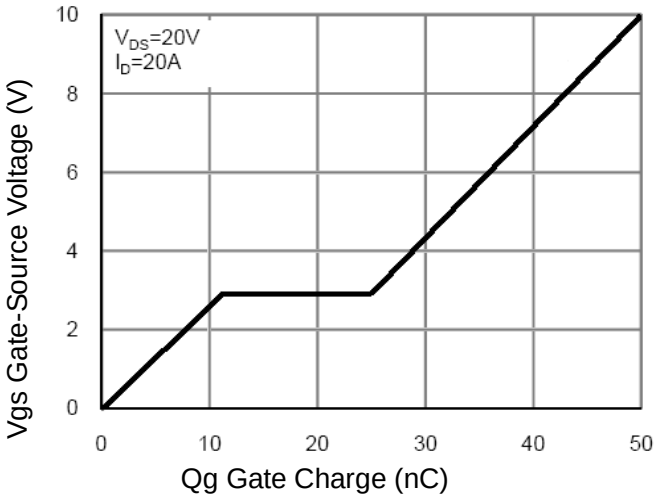

Figure 5 Gate Charge

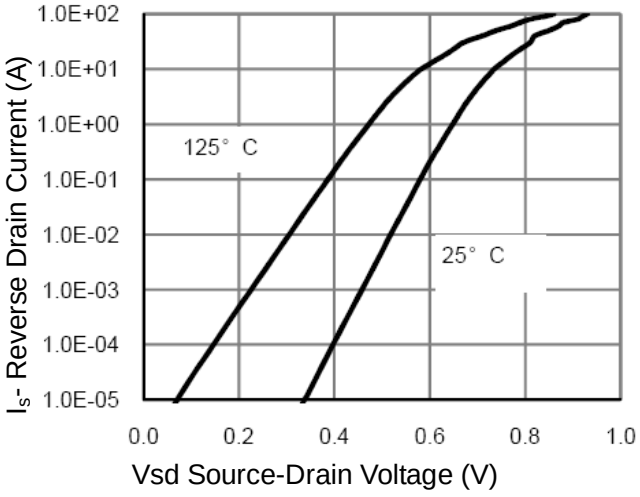

Figure 6 Source- Drain Diode Forward

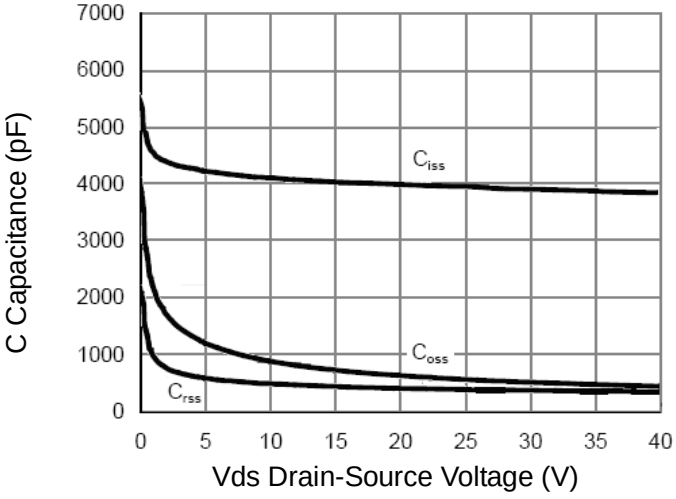

Figure 7 Capacitance vs Vds

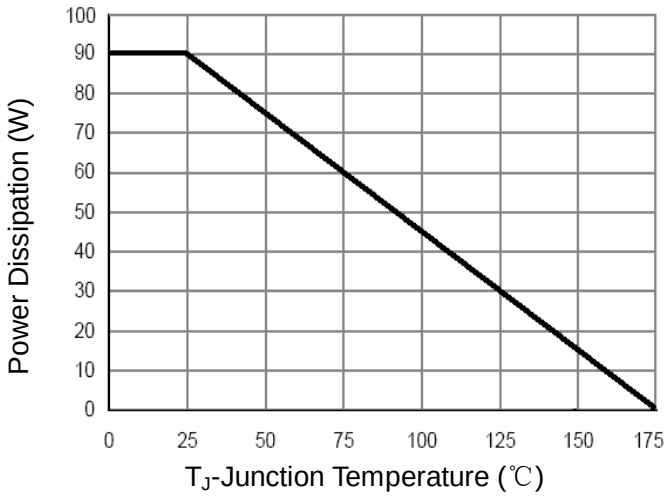

Figure 9 Power De-rating

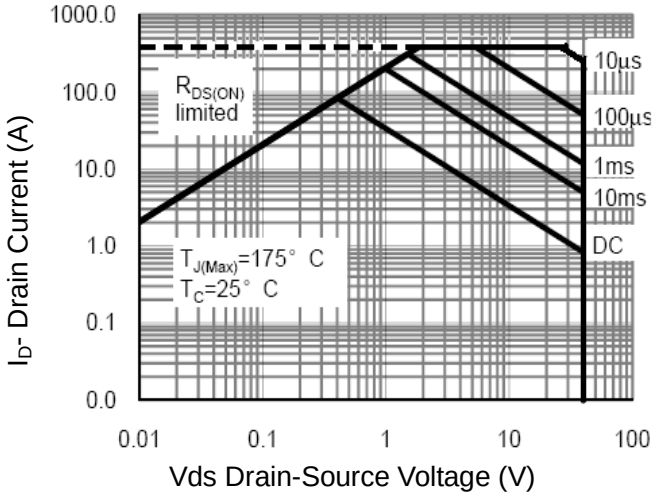

Figure 8 Safe Operation Area

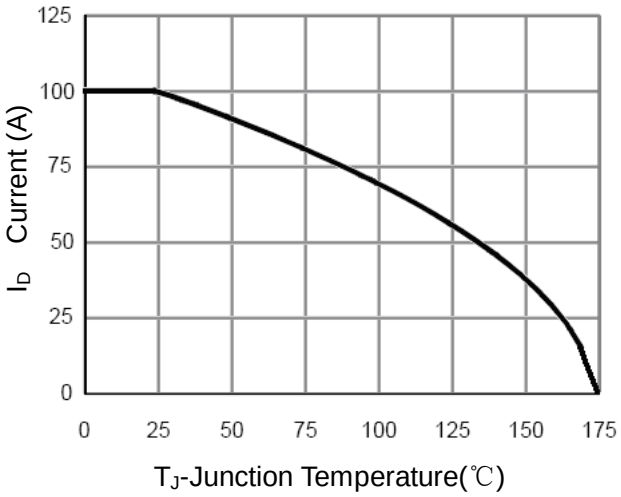

Figure 10 ID Current-Junction Temperature

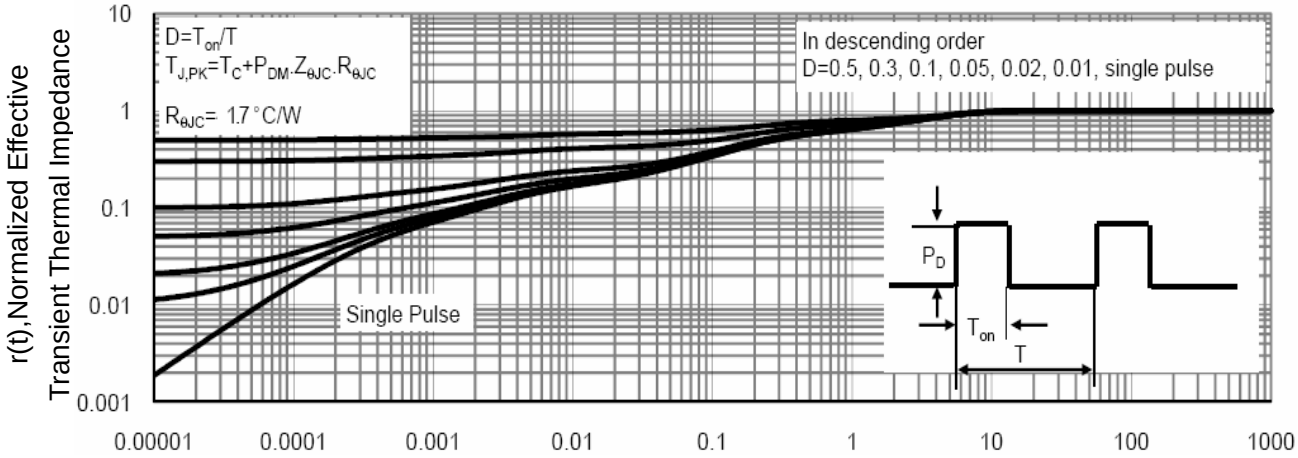

Figure 11 Normalized Maximum Transient Thermal Impedance

TO-220 Package information

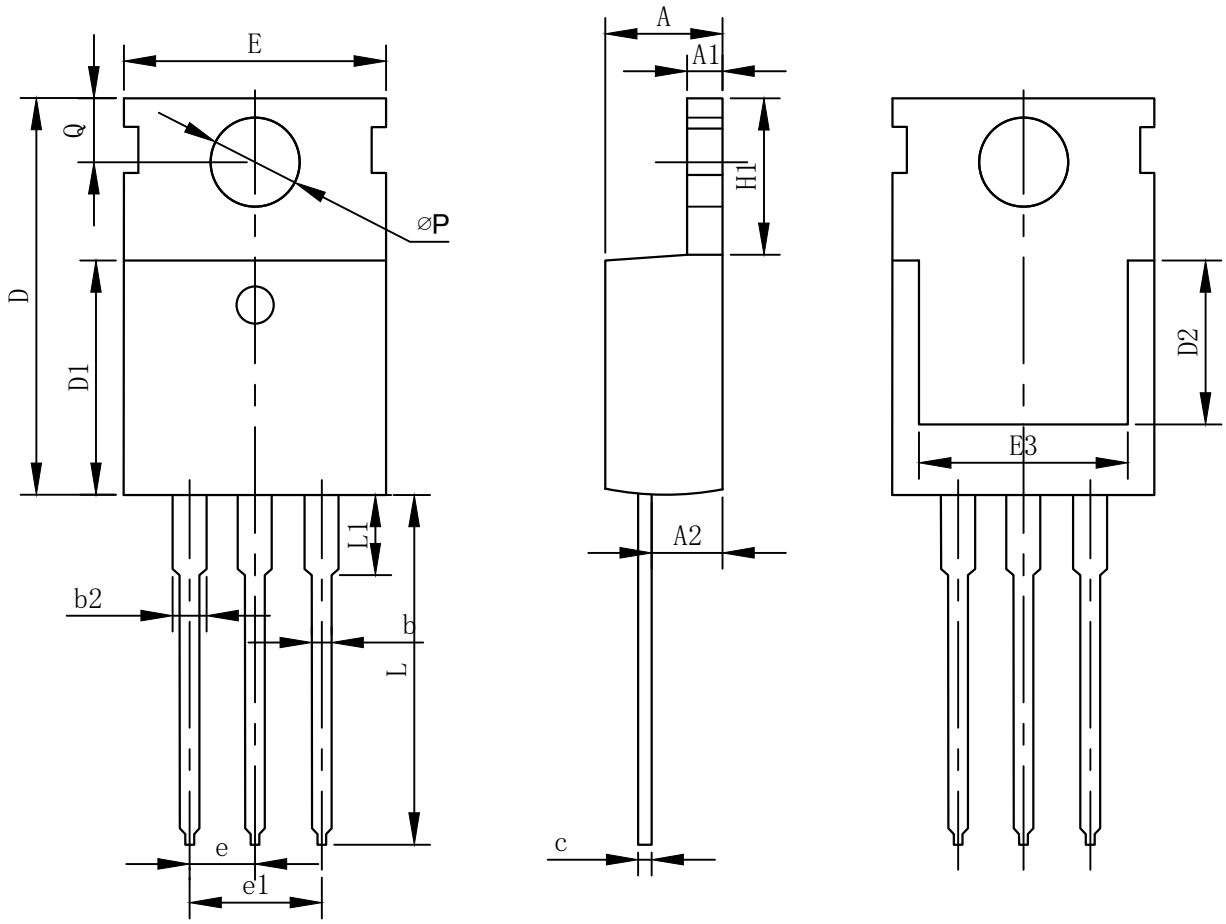

COMMONDIMENSIONS

SYMBO	mm		
	MIN	NOM	MAX
A	4.37	4.57	4.70
A1	1.25	1.30	1.40
A2	2.20	2.40	2.60
b	0.70	0.80	0.95
b2	1.70	1.27	1.47
c	0.45	0.50	0.60
D	15.10	15.60	16.10
D1	8.80	9.10	9.40
D2	5.50	-	-
E	9.70	10.00	10.30
E3	7.00	-	-
e	2.54BSC		
e1	5.08BSC		
H1	6.25	6.50	6.85
L	12.75	13.50	13.80
L1	-	3.10	3.40
⌀P	3.40	3.60	3.80
Q	2.60	2.80	3.00