Description

The G2003A uses advanced trench technology and design to provide excellent $R_{DS(ON)}$ with low gate charge. It can be used in a wide variety of applications.

General Features

- V_{DS} = 190V,I_D =3A
  $R_{DS(ON)}$ < 540mΩ @ V_{GS}=10V (Typ:430mΩ)
  $R_{DS(ON)}$ < 560mΩ @ V_{GS}=10V (Typ:440mΩ)
- High density cell design for ultra low Rdson
- Fully characterized avalanche voltage and current
- Excellent package for good heat dissipation
- RoHS Compliant

Application

- Power switching application

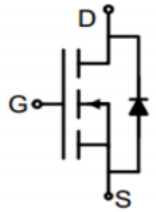

Schematic Diagram

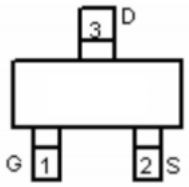

Marking and Pin Assignment

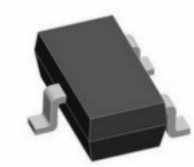

SOT-23-3

Ordering Information

Part Number	Marking	Case	Packaging
G2003A	G2003A	SOT-23-3	3000pcs/Reel

Absolute Maximum Ratings (T_A=25℃unless otherwise noted)

Parameter	Symbol	Limit	Unit
Drain-Source Voltage	V_{DS}	190	V
Gate-Source Voltage	V_{GS}	±20	V
Drain Current-Continuous	I_D	3	A
Drain Current-Pulsed (Note 1)	I_{DM}	8	A
Maximum Power Dissipation	P_D	1.8	W
Operating Junction and Storage Temperature Range	T_J,T_{STG}	-55 To 150	℃

Thermal Characteristic

Thermal Resistance,Junction-to-Ambient (Note 2)	$R_{\theta JA}$	70	℃/W

Electrical Characteristics (T_A=25℃unless otherwise noted)

Parameter	Symbol	Condition	Min	Typ	Max	Unit
Off Characteristics						
Drain-Source Breakdown Voltage	BV_{DSS}	V_{GS}=0V I_D=250μA	190	-	-	V
Zero Gate Voltage Drain Current	I_{DSS}	V_{DS}=190V,V_{GS}=0V	-	-	1	μA

Gate-Body Leakage Current	I_{GSS}	V_{GS}=±20V,V_{DS}=0V	-	-	±100	nA
On Characteristics (Note 3)						
Gate Threshold Voltage	$V_{GS(th)}$	V_{DS}=V_{GS},I_D=250μA	1.0	1.7	3	V
Drain-Source On-State Resistance	$R_{DS(ON)}$	V_{GS}=10V, I_D=2A	-	430	540	mΩ
Drain-Source On-State Resistance	$R_{DS(ON)}$	V_{GS}=4.5V, I_D=2A	-	440	560	mΩ
Forward Transconductance	g_{FS}	V_{DS}=15V,I_D=2A	-	8	-	S
Dynamic Characteristics (Note4)						
Input Capacitance	C_{lss}	V_{DS}=25V,V_{GS}=0V, F=1.0MHz	-	580	-	PF
Output Capacitance	C_{oss}		-	90	-	PF
Reverse Transfer Capacitance	C_{rss}		-	3	-	PF
Switching Characteristics (Note 4)						
Turn-on Delay Time	$t_{d(on)}$	V_{DD}=100V, R_L=15Ω V_{GS}=10V,R_G=2.5Ω	-	10	-	nS
Turn-on Rise Time	t_r		-	12	-	nS
Turn-Off Delay Time	$t_{d(off)}$		-	15	-	nS
Turn-Off Fall Time	t_f		-	15	-	nS
Total Gate Charge	Q_g	V_{DS}=100V,I_D=2A, V_{GS}=10V	-	12		nC
Gate-Source Charge	Q_{gs}		-	2.5	-	nC
Gate-Drain Charge	Q_{gd}		-	3.8	-	nC
Drain-Source Diode Characteristics						
Diode Forward Voltage (Note 3)	V_{SD}	V_{GS}=0V,I_S=3A	-	-	1.2	V
Diode Forward Current (Note 2)	I_S		-	-	3	A

Notes:

1. Repetitive Rating: Pulse width limited by maximum junction temperature.
2. Surface Mounted on FR4 Board, t ≤ 10 sec.
3. Pulse Test: Pulse Width ≤ 300μs, Duty Cycle ≤ 2%.
4. Guaranteed by design, not subject to production

Test Circuit

1）E_{AS} test circuit

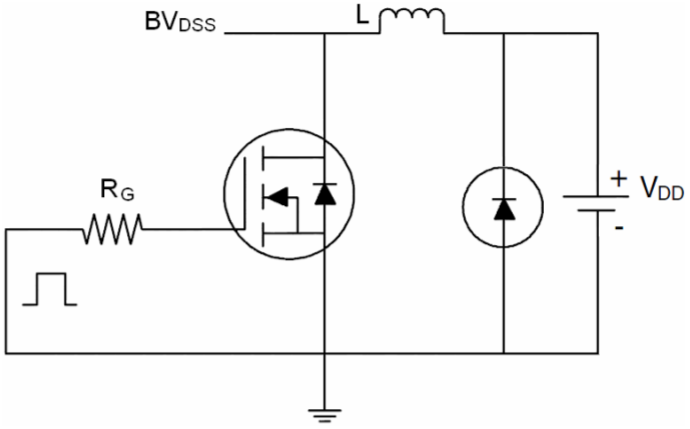

2）Gate charge test circuit

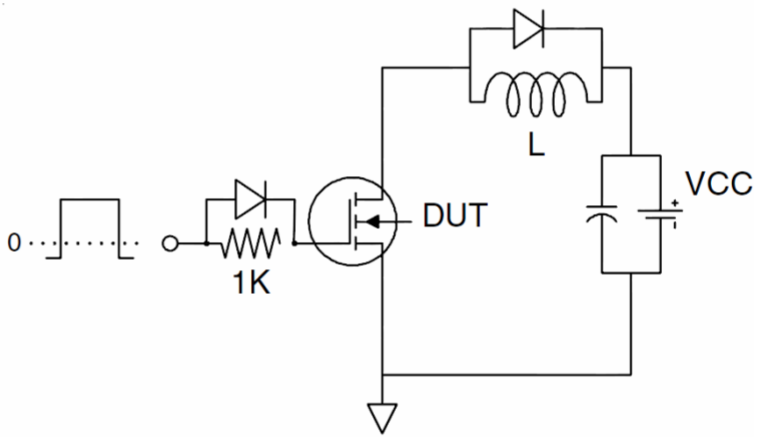

3）Switch Time Test Circuit

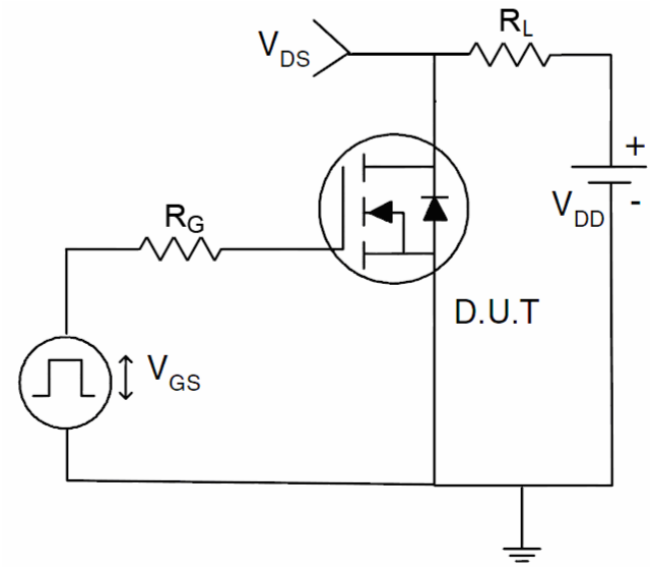

Typical Electrical and Thermal Characteristics (Curves)

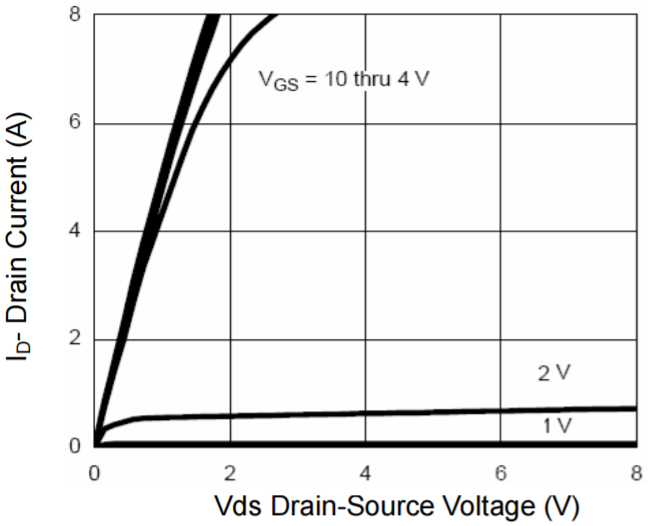

Figure 1 Output Characteristics

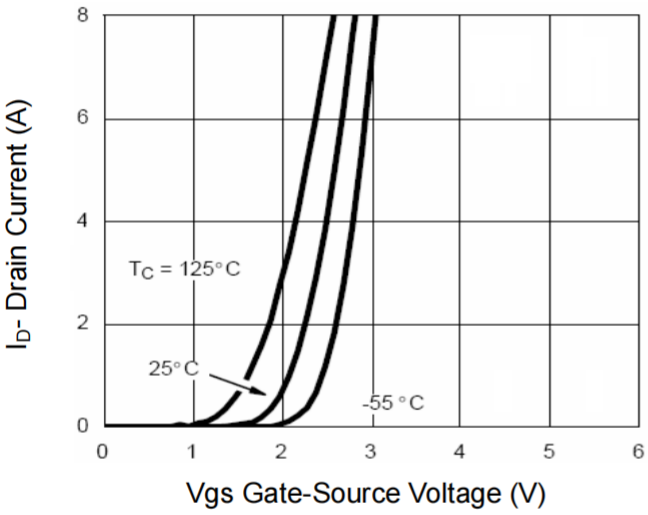

Figure 2 Transfer Characteristics

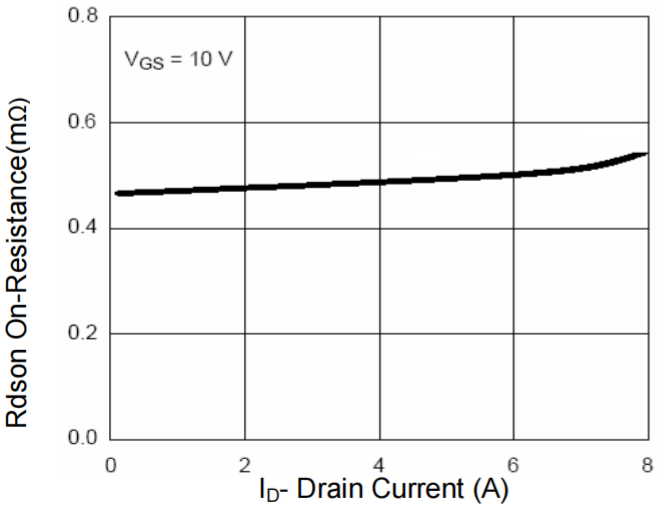

Figure 3 Rdson- Drain Current

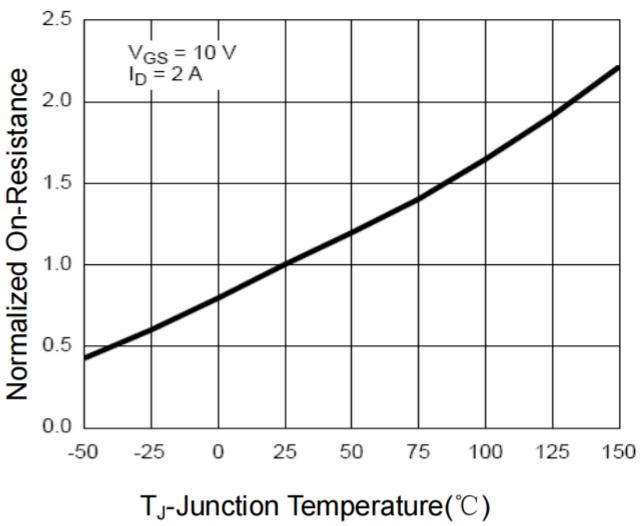

Figure 4 Rdson-JunctionTemperature

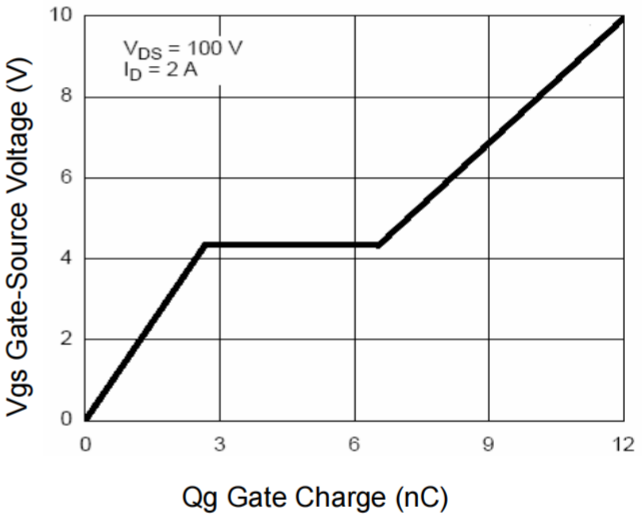

Figure 5 Gate Charge

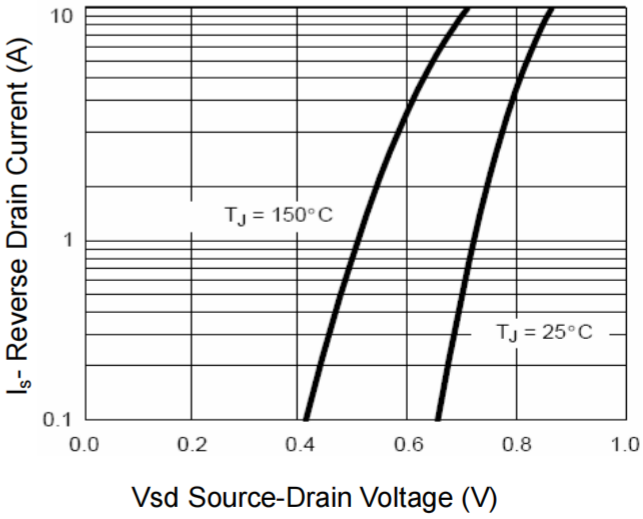

Figure 6 Source- Drain Diode Forward

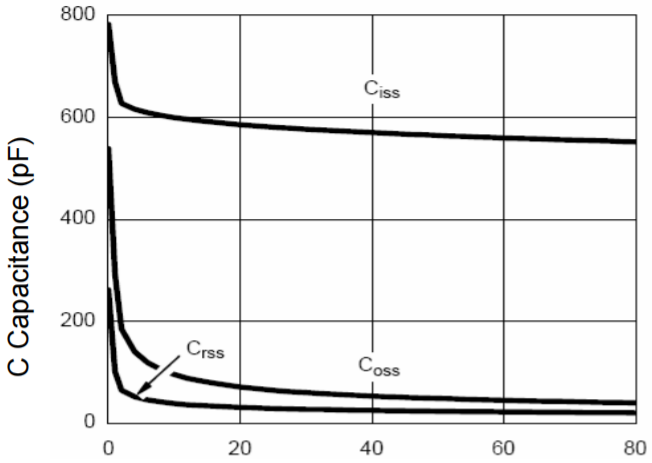

Figure 7 Capacitance vs Vds

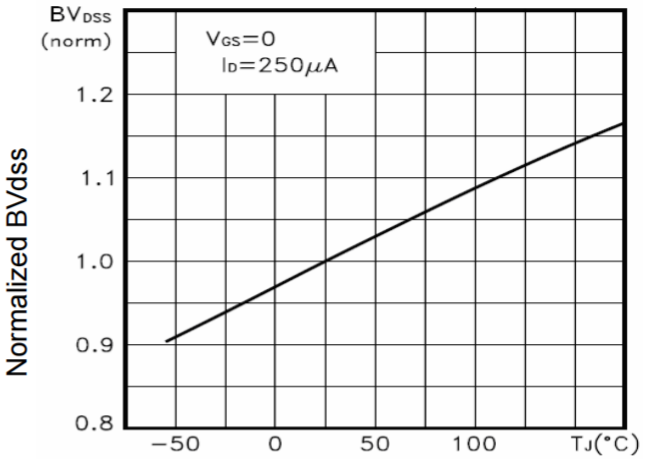

Figure 9 BV_{DSS} vs Junction Temperature

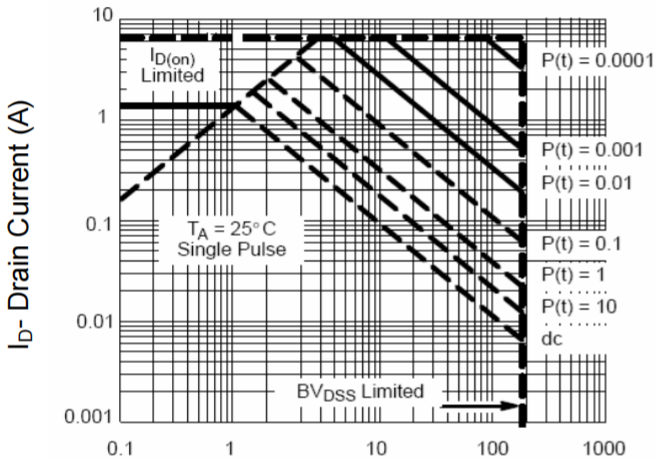

Figure 8 Safe Operation Area

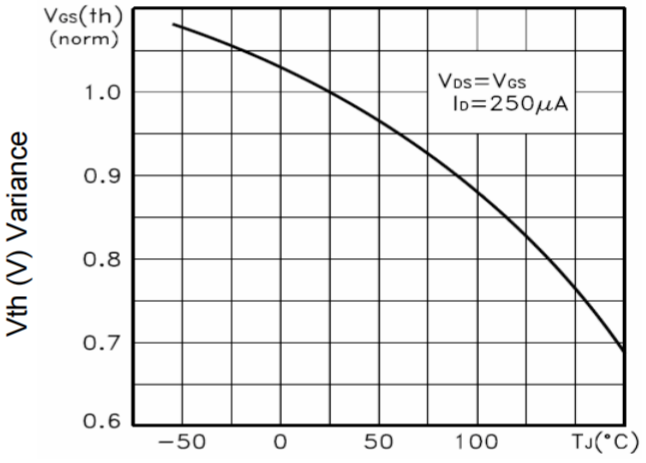

Figure 10 $V_{GS(th)}$ vs Junction Temperature

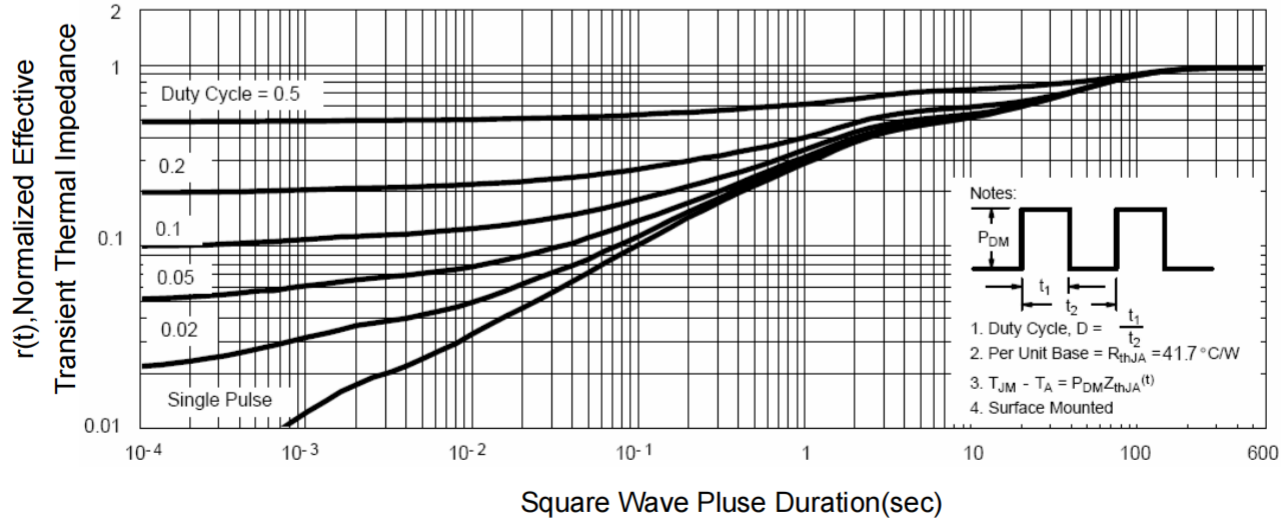

Figure 11 Normalized Maximum Transient Thermal Impedance

SOT-23-3 package information

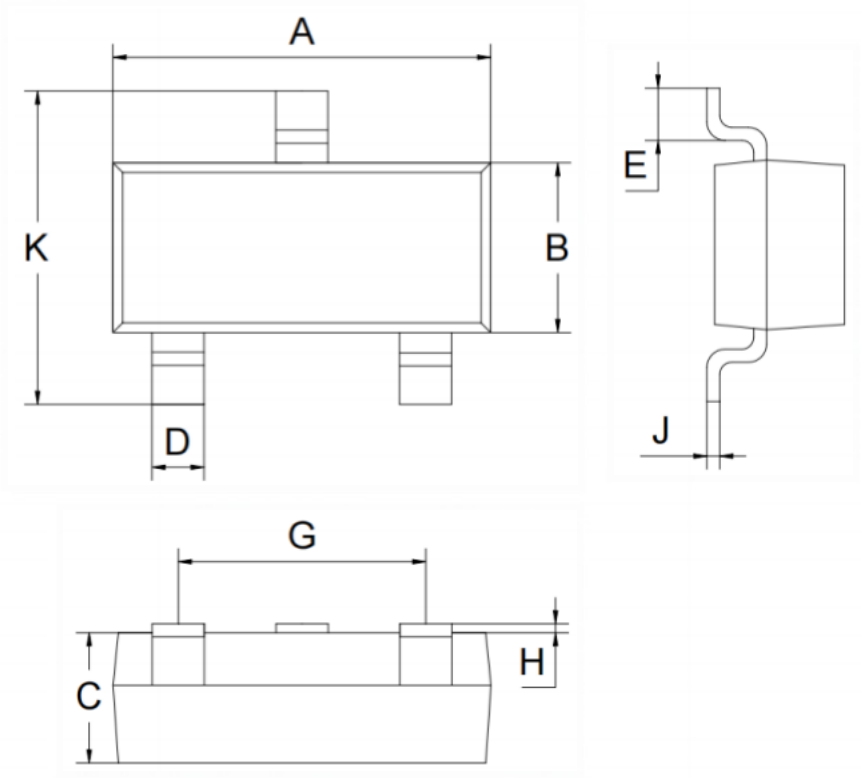

SOT-23-3			
Dim	MIN	NOM	MAX
A	2.80	2.90	3.00
B	1.50	1.60	1.70
C	1.00	1.10	1.20
D	0.30	0.40	0.50
E	0.25	0.40	0.55
G		1.90	
H	0.00	-	0.10
J	0.047	0.127	0.207
K	2.60	2.80	3.00
All Dimensions in mm			