Description

Features

V_{DSS}	$R_{DS(ON)}$ @10V(Typ)	I_D
200V	0.44Ω	5A

- Fast switching
- 100% avalanche tested
- Improved dv/dt capability
- RoHS Compliant

Application

- DC Motor Control and Class D Amplifier
- Uninterruptible Power Supply (UPS)
- Automotive

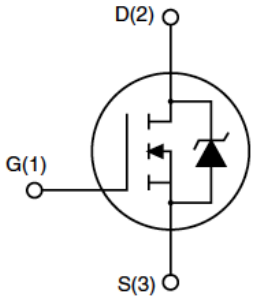

Schematic diagram

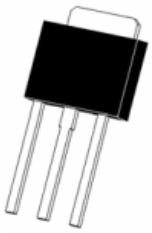

TO-251

Ordering Information

Part Number	Marking	Case	Packaging
G5N20J	5N20A	TO-251	75pcs/Tube

Absolute Maximum Ratings T_C=25℃ unless otherwise specified

Symbol	Parameter		Max.	Units
V_{DSS}	Drain-Source Voltage		200	V
V_{GSS}	Gate-Source Voltage		± 20	V
I_D	Continuous Drain Current	T_C = 25℃	5	A
		T_C = 100℃	3.24	A
I_{DM}	Pulsed Drain Current note1		20	A
E_{AS}	Single Pulsed Avalanche Energy note2		125	mJ
dv/dt	Peak Diode Recovery Energy note3		5	V/ns
P_D	Power Dissipation	T_C = 25℃	78	W
	Linear Derating Factor	T_C > 25℃	0.625	W/℃
$R_{\theta JC}$	Thermal Resistance, Junction to Case		1.6	℃/W
T_J, T_{STG}	Operating and Storage Temperature Range		-55 to +150	℃

*Drain current limited by maximum junction temperature

Electrical Characteristics T_C=25℃ unless otherwise specified

Symbol	Parameter	Test Condition	Min.	Typ.	Max.	Units
Off Characteristic						
$V_{(BR)DSS}$	Drain-Source Breakdown Voltage	V_{GS} = 0V,I_D = 250μA	200	-	-	V
$\triangle V_{(BR)DSS}$ /$\triangle T_J$	Breakdown Voltage Temperature Coefficient	Reference to 25℃, I_D = 250μA	-	0.25	-	V/℃
I_{DSS}	Zero Gate Voltage Drain Current	V_{DS} = 200V, V_{GS} = 0V	-	-	1	μA
		V_{DS} = 160V, T_C = 125℃	-	-	10	μA
I_{GSS}	Gate to Body Leakage Current	V_{DS} = 0V, V_{GS} = ±20V	-	-	±100	nA
On Characteristics						
$V_{GS(th)}$	Gate Threshold Voltage note4	V_{DS} = V_{GS}, I_D = 250μA	1	1.55	3	V
$R_{DS(on)}$	Static Drain-Source On-Resistance	V_{GS} =10V, I_D = 2.5A	-	0.44	0.58	Ω
g_{FS}	Forward Transconductance	V_{DS} =30V, I_D = 2.5A	-	5.2	-	S
Dynamic Characteristics						
C_{iss}	Input Capacitance	V_{DS} = 25V, V_{GS} = 0V, f = 1.0MHz	-	255	-	pF
C_{oss}	Output Capacitance		-	30.2	-	pF
C_{rss}	Reverse Transfer Capacitance		-	2.3	-	pF
Q_g	Total Gate Charge	VDD = 160V, ID = 5A, V_{GS} = 10V	-	10.8	-	nC
Q_{gs}	Gate-Source Charge		-	1.7	-	nC
Q_{gd}	Gate-Drain(“Miller”) Charge		-	3.1	-	nC
Switching Characteristics						
$t_{d(on)}$	Turn-On Delay Time	V_{DD} = 100V, I_D = 5A, RG = 10Ω, VGS = 10V	-	7.33	-	ns
t_r	Turn-On Rise Time		-	10.7	-	ns
$t_{d(off)}$	Turn-Off Delay Time		-	18.2	-	ns
t_f	Turn-Off Fall Time		-	11.9	-	ns
Drain-Source Diode Characteristics and Maximum Ratings						
I_S	Maximum Continuous Drain to Source Diode Forward Current		-	-	5	A
I_{SM}	Maximum Pulsed Drain to Source Diode Forward Current		-	-	20	A
V_{SD}	Drain to Source Diode Forward Voltage	V_{GS} = 0V, I_S = 5A	-	-	1.4	V
t_{rr}	Reverse Recovery Time	V_{GS} = 0V, I_F = 5A, di/dt =100A/μs	-	125.5	-	ns
Q_{rr}	Reverse Recovery Charge		-	357	-	nC

Notes:

1. Repetitive Rating: Pulse width limited by maximum junction temperature
2. L = 10mH, I_{AS} = 5A, V_{DD} = 50V, R_G = 25Ω, Starting T_J = 25℃
3. I_{SD} ≤ 5A, di/dt ≤ 200A/μs, V_{DD} ≤ B_{VDSS}, Starting T_J = 25℃
4. Pulse width ≤ 300μs; duty cycle ≤ 2%.

Typical Performance Characteristics

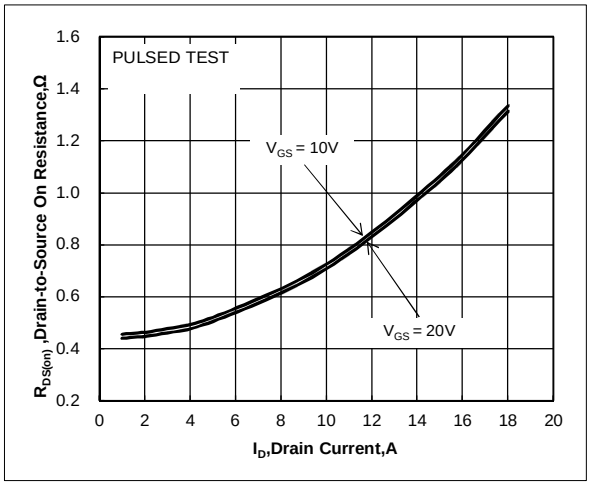

Figure 1. Drain-to-Source On Resistance vs. Drain Current and Gate Voltage

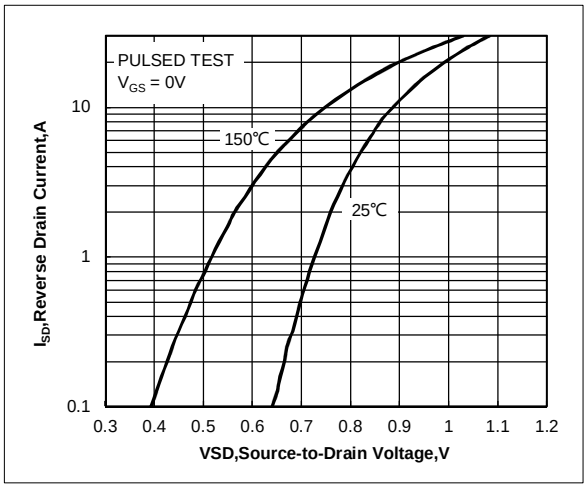

Figure 2. Body Diode Forward Voltage vs. Source Current and Temperature

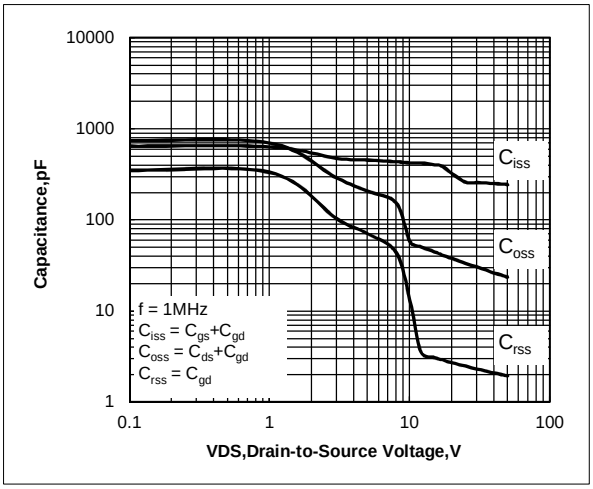

Figure 3. Capacitance Characteristics

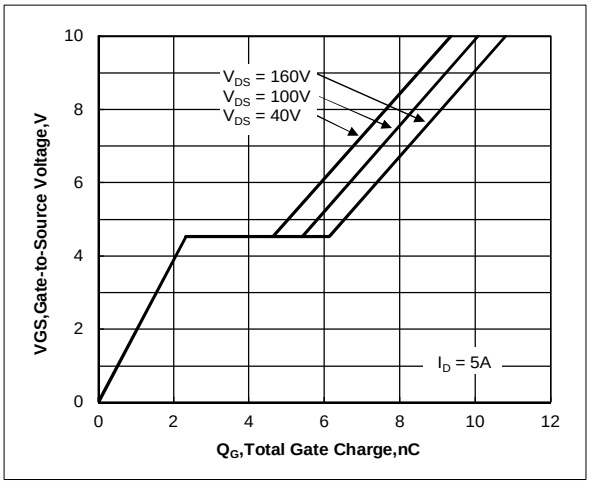

Figure4 .Gate Charge Characteristics

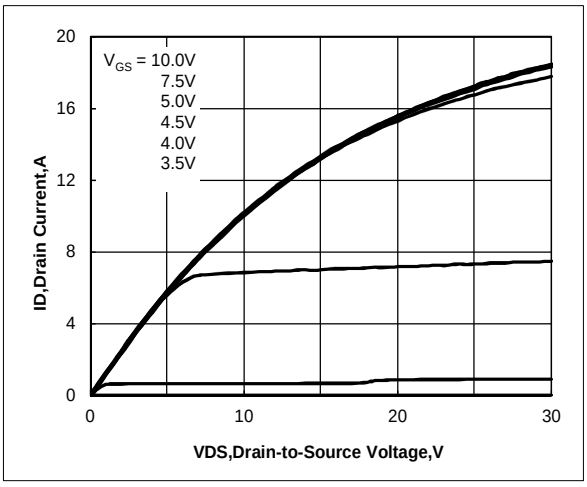

Figure 5. Output Characteristics

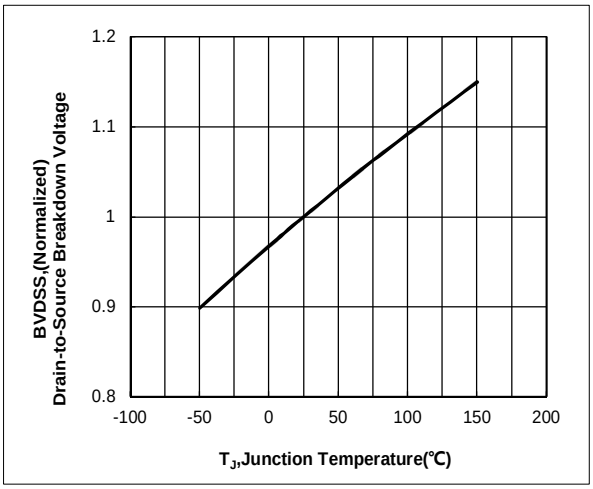

Figure 6. Normalized Breakdown Voltage vs. Junction Temperature

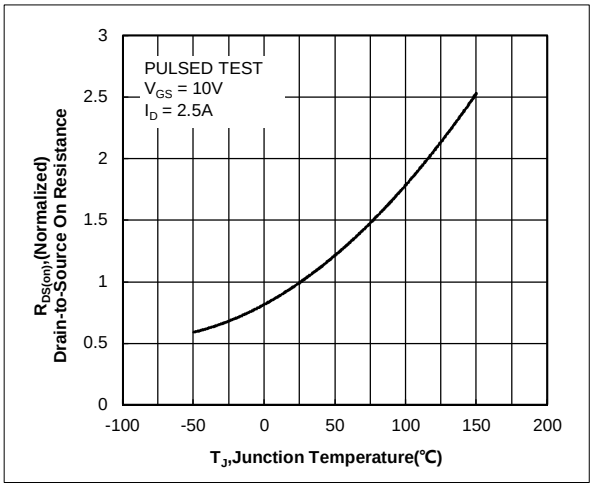

Figure 7. Normalized On Resistance vs. Junction Temperature

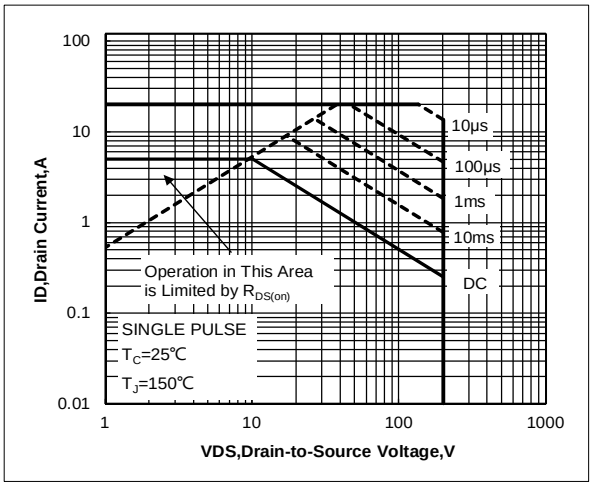

Figure 8. Maximum Safe Operating Area for RU5N20A

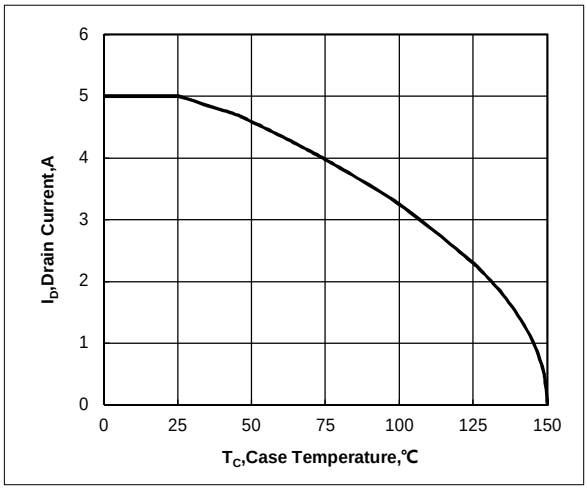

Figure 9. Maximum Continuous Drain Current vs. Case Temperature

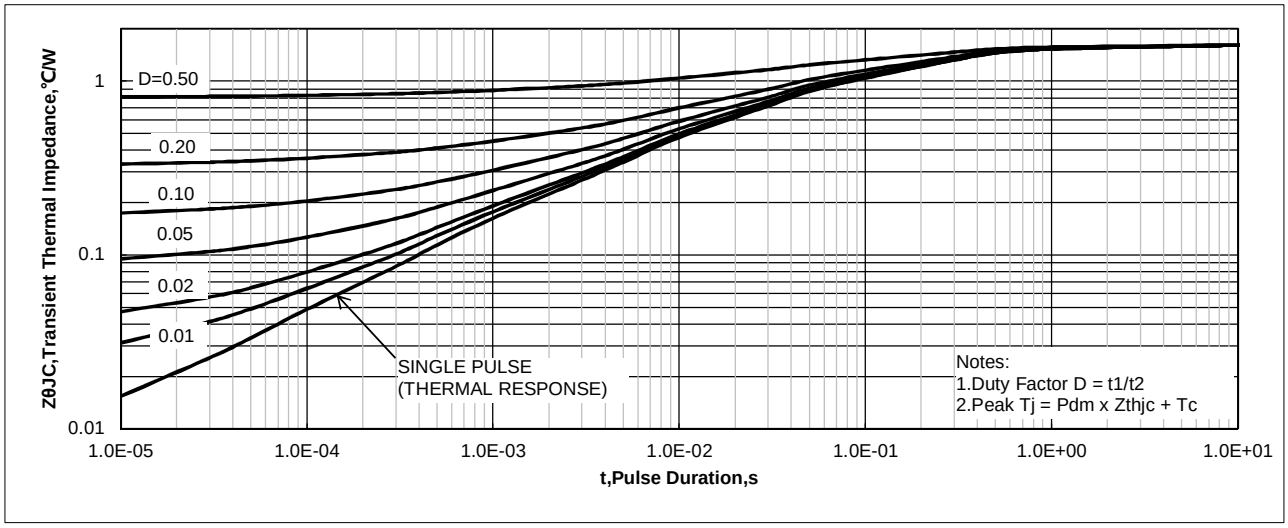

Figure 10. Maximum Effective Transient Thermal Impedance, Junction-to-Case for RU5N20A

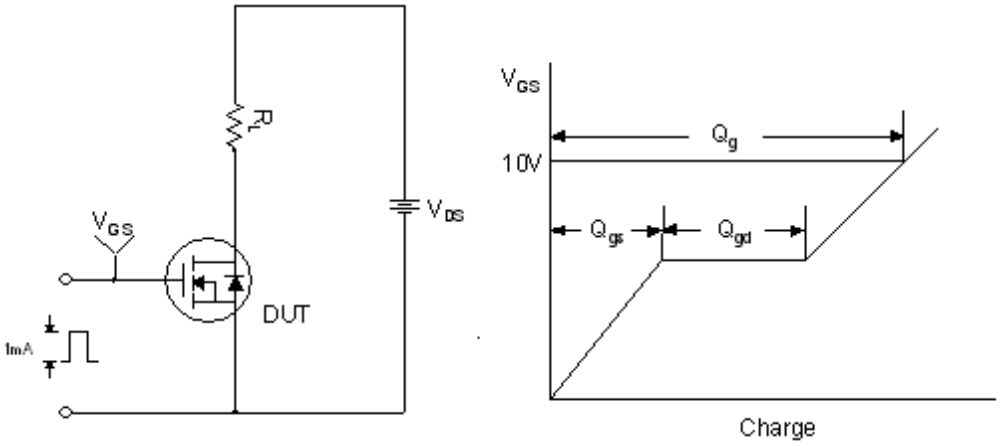

Figure 11. Gate Charge Test Circuit&Waveform

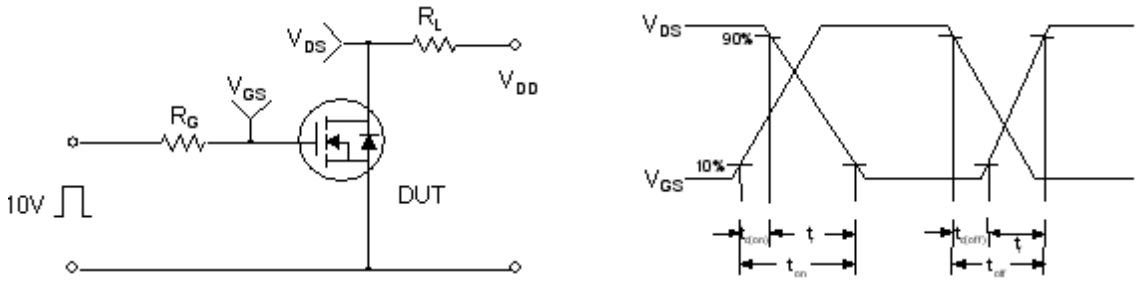

Figure 12. Resistive Switching Test Circuit&Waveforms

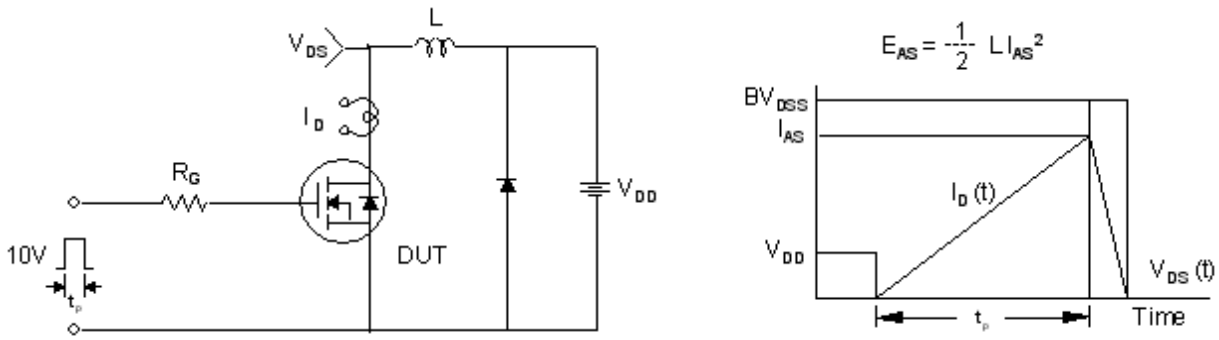

Figure 13. Unclamped Inductive Switching Test Circuit & Waveforms

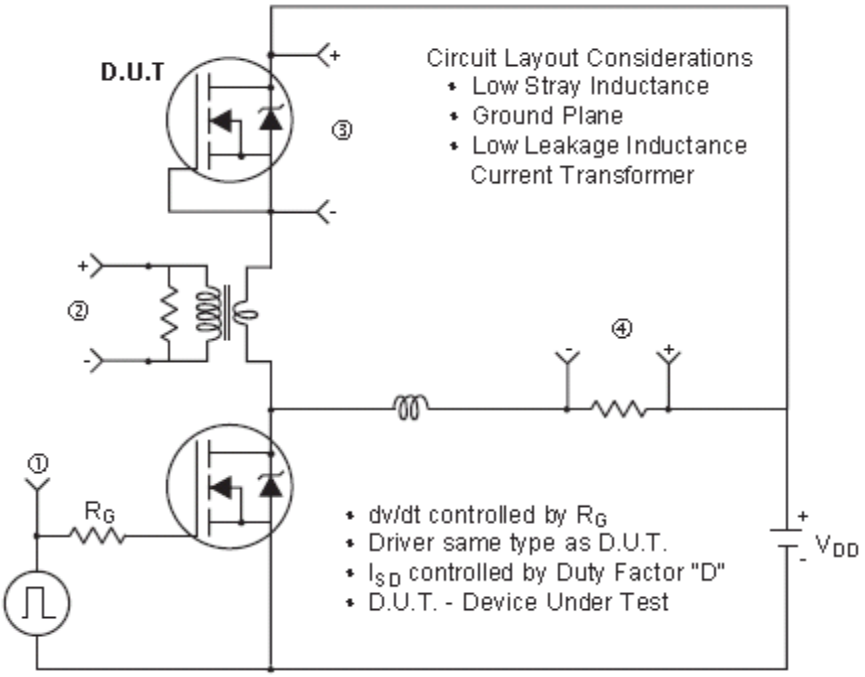

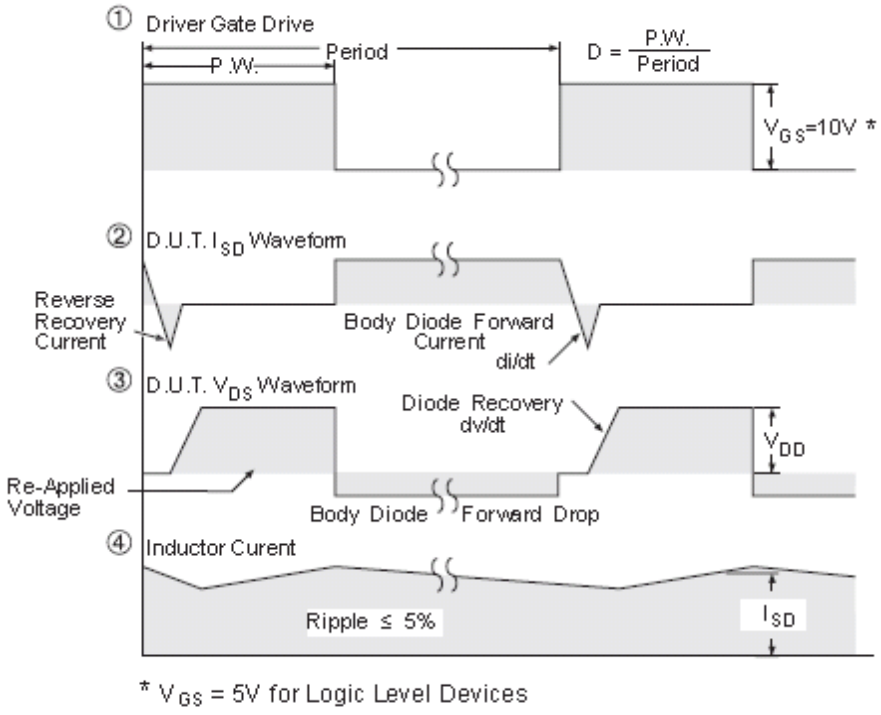

Figure 14. Peak Diode Recovery dv/dt Test Circuit & Waveforms (For N-channel)

TO-251 Package information

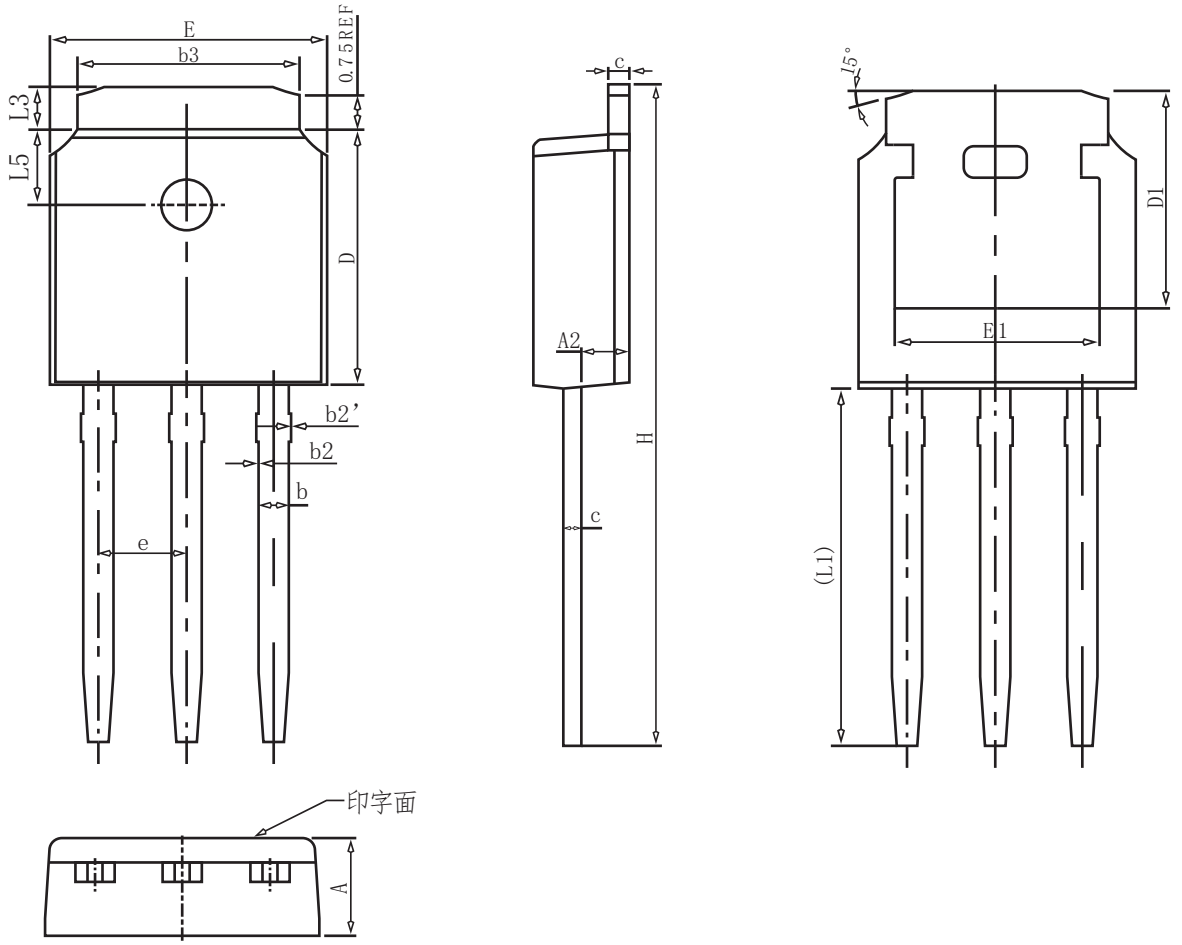

COMMON DIMENSIONS

SYMBOL	mm		
	MIN	NOM	MAX
A	2.20	2.30	2.40
A2	0.97	1.07	1.17
b	0.68	0.78	0.90
b2	0.00	0.04	0.10
b2'	0.00	0.04	0.10
b3	5.20	5.33	5.50
c	0.43	0.53	0.63
D	5.98	6.10	6.22
D1		5.30REF	
E	6.40	6.60	6.80
E1	4.63	–	–
e		2.286BSC	
H	16.22	16.52	16.82
L1	9.15	9.40	9.65
L3	0.88	1.02	1.28
L5	1.65	1.80	1.95