Description

The G69A uses advanced trench technology to provide excellent $R_{DS(ON)}$, low gate charge and operation with gate voltages .This device is suitable for use as a load switching application and a wide variety of other applications.

General Features

V_{DSS}	$R_{DS(ON)}$ @- 4.5V (typ)	I_D
-12V	12 mΩ	-16A

- Advanced trench MOSFET process technology
- Ultra low on-resistance with low gate charge
- RoHS Compliant

Application

- PWM applications
- Load switch
- Battery charge in cellular handset

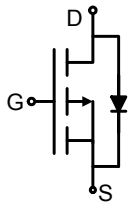

Schematic diagram

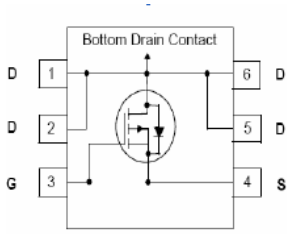

Pin assignment

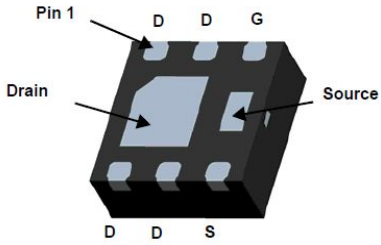

DFN2X2-6L
(thickness 0.5cm)

Ordering Information

Part Number	Marking	Case	Packaging
G69A	G69A	DFN2*2-6L	3000pcs/Reel

Absolute maximum ratings (T_C=25℃unless otherwise noted)

Parameter	Symbol	Limit	Unit
Drain-Source Voltage	V_{DS}	-12	V
Gate-Source Voltage	V_{GS}	±8	V
Drain Current-Continuous	I_D	-16	A
Drain Current -Pulsed (Note 1)	I_{DM}	-65	A
Maximum Power Dissipation	P_D	18	W
Operating Junction and Storage Temperature Range	T_J,T_{STG}	-55 To 150	℃

Thermal Characteristic

Thermal Resistance,Junction-to-Case (Note 2)	$R_{\theta JC}$	6.9	℃/W

Electrical characteristics (T_A=25℃unless otherwise noted)

Parameter	Symbol	Condition	Min	Typ	Max	Unit
Off Characteristics						
Drain-Source Breakdown Voltage	$V_{(BR)\ DSS}$	V_{GS}=0V I_D=-250μA	-12	-	-	V
Zero Gate Voltage Drain Current	I_{DSS}	V_{DS}=-12V,V_{GS}=0V	-	-	-1	μA
Gate-Body Leakage Current	I_{GSS}	V_{GS}=±8V, V_{DS}=0V	-	-	±100	nA
On Characteristics (Note 3)						
Gate Threshold Voltage	$V_{GS(th)}$	V_{DS}=V_{GS},I_D=-250μA	-0.4	-0.7	-1	V
Drain-Source On-State Resistance	$R_{DS(ON)}$	V_{GS}=-4.5V, I_D=-6A	-	12	21	mΩ
		V_{GS}=-2.5V, I_D=-4A	-	15	27	mΩ
Forward Transconductance	g_{FS}	V_{DS}=-5V,I_D=-6.7A	20	-	-	S
Dynamic Characteristics (Note4)						
Input Capacitance	C_{lss}	V_{DS}=-10V,V_{GS}=0V, F=1.0MHz	-	2700	-	PF
Output Capacitance	C_{oss}		-	680	-	PF
Reverse Transfer Capacitance	C_{rss}		-	590	-	PF
Switching Characteristics (Note 4)						
Turn-on Delay Time	$t_{d(on)}$	V_{DD}=-10V,I_D=-1A V_{GS}=-4.5V,R_{GEN}=10Ω	-	11	-	nS
Turn-on Rise Time	t_r		-	35	-	nS
Turn-Off Delay Time	$t_{d(off)}$		-	30	-	nS
Turn-Off Fall Time	t_f		-	10	-	nS
Total Gate Charge	Q_g	V_{DS}=-6V,I_D=-10A, V_{GS}=-4.5V	-	35	48	nC
Gate-Source Charge	Q_{gs}		-	5	-	nC
Gate-Drain Charge	Q_{gd}		-	10	-	nC
Drain-Source Diode Characteristics						
Diode Forward Voltage (Note 3)	V_{SD}	V_{GS}=0V,I_S=-8A	-	-	-1.2	V
Diode Forward Current (Note 2)	I_S		-	-	-16	A

Notes:

1. Repetitive Rating: Pulse width limited by maximum junction temperature.
2. Surface Mounted on FR4 Board, t ≤ 10 sec.
3. Pulse Test: Pulse Width ≤ 300μs, Duty Cycle ≤ 2%.
4. Guaranteed by design, not subject to production

Typical Electrical and Thermal Characteristics

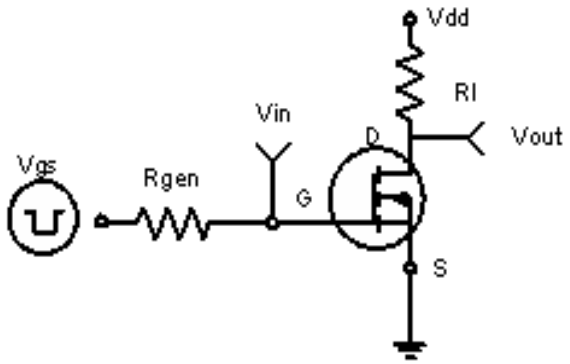

Figure 1:Switching Test Circuit

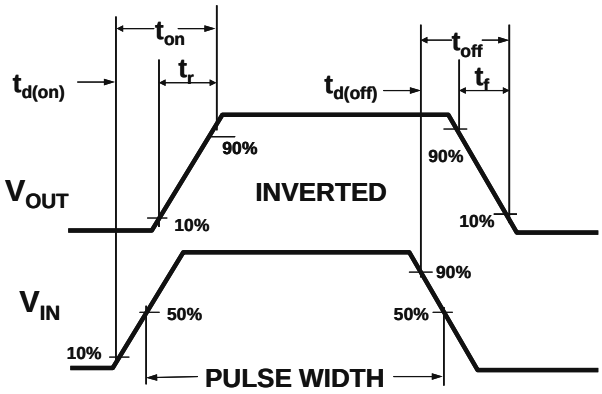

Figure 2:Switching Waveforms

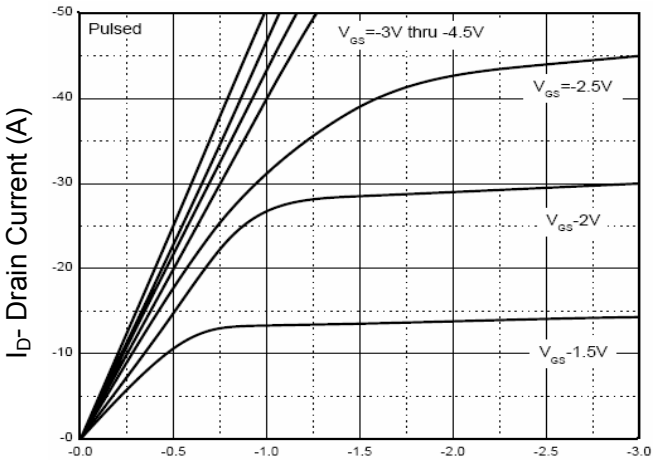

Figure 3 Output Characteristics

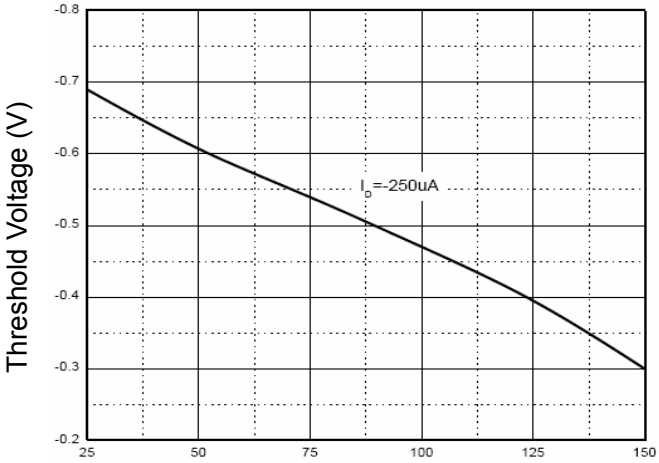

Figure 4 Drain Current

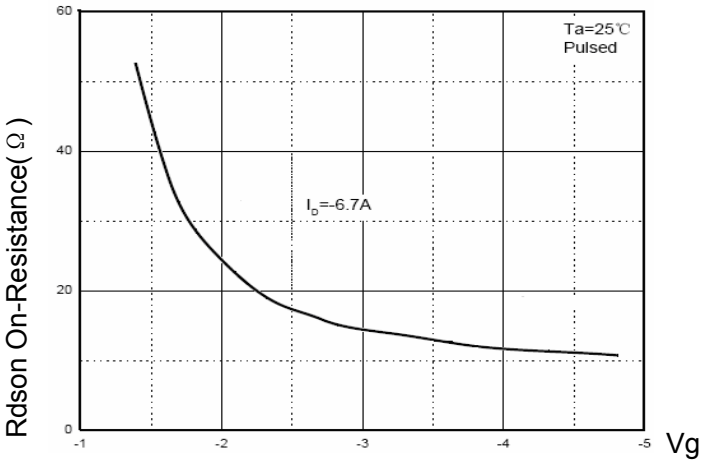

Figure 5 Rdson vs Vgs

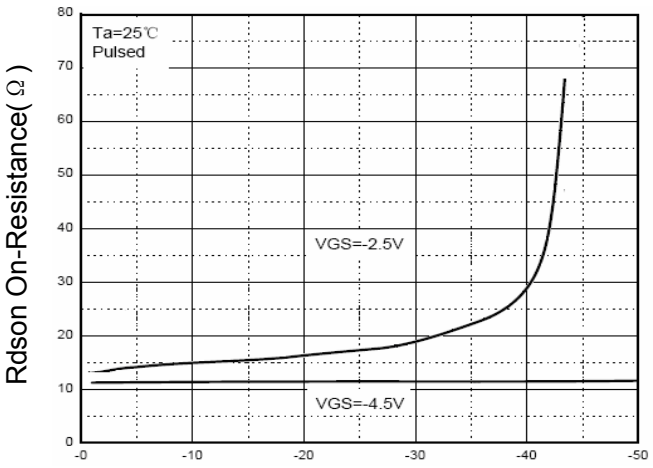

Figure 6 Drain-Source On-Resistance

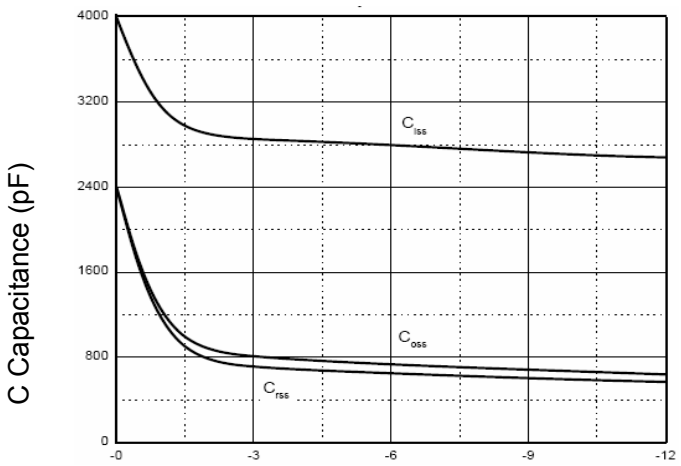

Figure 7 Capacitance vs Vds

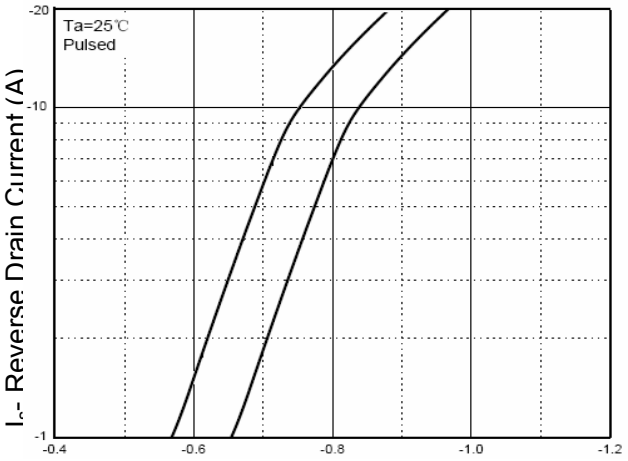

Figure 8 Source- Drain Diode Forward

DFN2X2 Package information

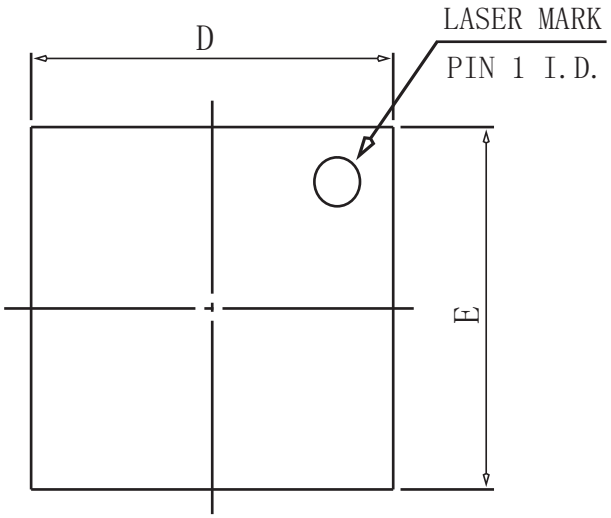

TOP VIEW

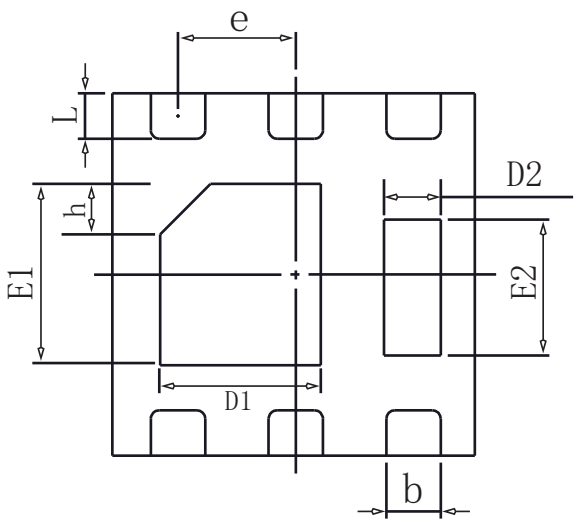

BOTTOM VIEW

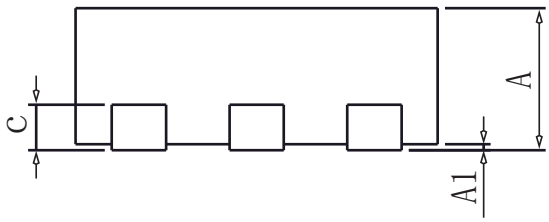

SIDE VIEW

COMMON DIMENSIONS

SYMBOL	mm		
	MIN	NOM	MAX
A	0.70	0.75	0.80
A1	NA	0.02	0.05
b	0.20	0.27	0.34
c	0.18	0.20	0.25
D	1.95	2.00	2.07
E	1.95	2.00	2.07
D1	0.80	0.90	1.00
E1	0.90	1.00	1.10
D2	0.20	0.30	0.40
E2	0.65	0.75	0.85
L	0.20	0.25	0.35
h	0.20	0.25	0.30
e	0.65BSC		