Description

The GC11N60 uses advanced super junction technology and design to provide excellent $R_{DS(ON)}$, low gate charge and operation with low gate voltages. This device is suitable for industry's AC-DC SMPS requirement for PFC, AC/DC power conversion, and industrial power application.

General Features

- New technology for high voltage device
- Low on-resistance and low conduction losses
- Small Package
- Ultra Low Gate Charge cause lower driving requirement
- 100% Avalanche Tested
- RoHS Compliant

Application

- Power Factor Correction (PFC)
- Switched Mode Power Supply (SMPS)
- Uninterruptible Power Supply (UPS)

V_{DS}	$R_{DS\ (ON)}$ @ 10V (Typ)	I_D
600V	290mΩ	11 A

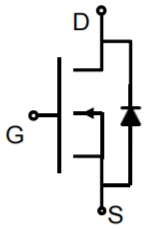

Schematic Diagram



Marking and Pin Assignment

■ Ordering Information

Part Number	Marking	Case	Packaging
GC11N60K	GC11N60	TO-252	2500pcs/Reel
GC11N60T	GC11N60	TO-220	50pcs/Tube
GC11N60F	GC11N60	TO-220F	50pcs/Tube

Absolute Maximum Ratings (T_C=25℃ unless otherwise noted)

Parameter	Symbol	Value		Unit
		TO-252 TO-220	TO-220F	
Drain-Source Voltage	V_{DS}	600		V
Gate-Source Voltage	V_{GS}	±30		V
Drain Current-Continuous	I_D	11		A
Drain Current-Pulsed (Note 1)	I_{DM}	33		A
Single Pulse Avalanche Energy (Note 2)	E_{AS}	210		mJ
Avalanche Current (Note 1)	I_{AR}	1.8		A
Repetitive Avalanche Energy (Note 1)	E_{AR}	0.32		mJ
Maximum Power Dissipation	P_D	78	31.3	W
Operating Junction and Storage Temperature Range	T_J, T_{STG}	-55 To 150		℃

Thermal Characteristic

Parameter	Symbol	Value		Unit
		TO-252 TO-220	TO-220F	
Thermal Resistance,Junction-to-Case	R_{thJC}	1.6	4	℃/W
Thermal Resistance,Junction-to-Ambient (Note 2)	R_{thJA}	62	80	℃/W

Electrical Characteristics (T_J=25℃ unless otherwise noted)

Parameter	Symbol	Condition	Min	Typ	Max	Unit
On/ Off Characteristics						
Drain-Source Breakdown Voltage	BV_{DSS}	V_{GS}=0V I_D=250μA	600	-	-	V
Zero Gate Voltage Drain Current (T_J=25℃)	I_{DSS}	V_{DS}=650V,V_{GS}=0V	-	-	1	μA
Zero Gate Voltage Drain Current (T_J=150℃)	I_{DSS}	V_{DS}=650V,V_{GS}=0V	-	-	100	μA
Gate-Body Leakage Current	I_{GSS}	V_{GS}=±30V,V_{DS}=0V	-	-	±100	nA
On Characteristics (Note 3)						
Gate Threshold Voltage	$V_{GS(th)}$	V_{DS}=V_{GS},I_D=250μA	2.5	-	4	V
Drain-Source On-State Resistance	$R_{DS(ON)}$	V_{GS}=10V, I_D=5.5A	-	290	330	mΩ
Forward Transconductance	g_{FS}	V_{DS}=10V,I_D=5.5A	-	-	-	S
Dynamic Characteristics (Note4)						
Input Capacitance	C_{lss}	V_{DS}=50V,V_{GS}=0V, F=1.0MHz	-	857	-	PF
Output Capacitance	C_{oss}		-	31	-	PF
Reverse Transfer Capacitance	C_{rss}		-	1.5	-	PF
Switching Characteristics (Note 4)						
Turn-on Delay Time	$t_{d(on)}$	V_{DD}=400V,I_D=11A V_{GS}=10V,R_{GEN}=25Ω	-	28	-	nS
Turn-on Rise Time	t_r		-	61	-	nS
Turn-Off Delay Time	$t_{d(off)}$		-	89	-	nS
Turn-Off Fall Time	t_f		-	41	-	nS
Total Gate Charge	Q_g	V_{DD}=480V, I_D=11A, V_{GS}=10V	-	19	-	nC
Gate-Source Charge	Q_{gs}		-	4.8	-	nC
Gate-Drain Charge	Q_{gd}		-	7.2	-	nC
Drain-Source Diode Characteristics						
Continuous Body Diode Current (Note 2)	I_S	T_C=25℃	-	-	11	A
Pulsed Diode Forward Current	I_{SM}	T_C=25℃	-	-	33	A
Diode Forward Voltage (Note 3)	V_{SD}	T_J=25℃, I_{SD}=11A,V_{GS}=0V	-	-	1.2	V
Reverse Recovery Time	t_{rr}	V_R=400V, I_F=I_S, di_F/dt = 100A/μs	-	377	-	nS
Reverse Recovery Charge	Q_{rr}		-	3.4	-	μC
Peak Reverse Recovery Current	I_{rrm}		-	17.8	-	A

Notes:

1. Repetitive Rating: Pulse width limited by maximum junction temperature.
2. I_{AS} = 1.6A, V_{DD} = 50V, R_G = 25Ω, Starting T_J = 25°C
3. Pulse Test: Pulse Width ≤ 300μs, Duty Cycle ≤ 1%.
4. Guaranteed by design, not subject to production

Typical Electrical And Thermal Characteristics

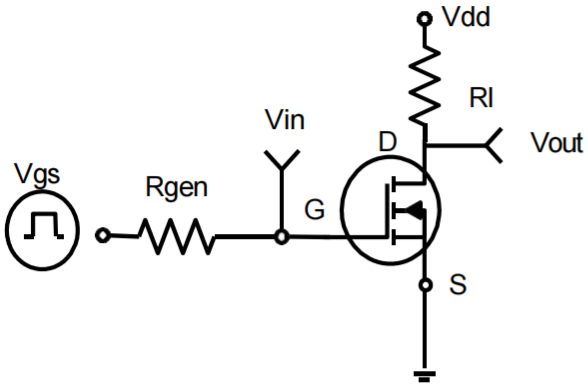

Figure 1. Switching Test Circuit

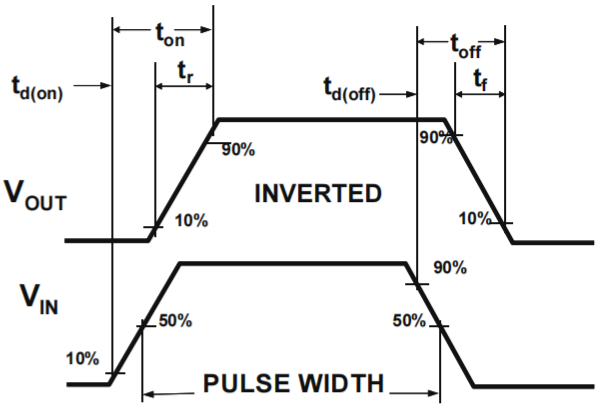

Figure 2. Switching Waveforms

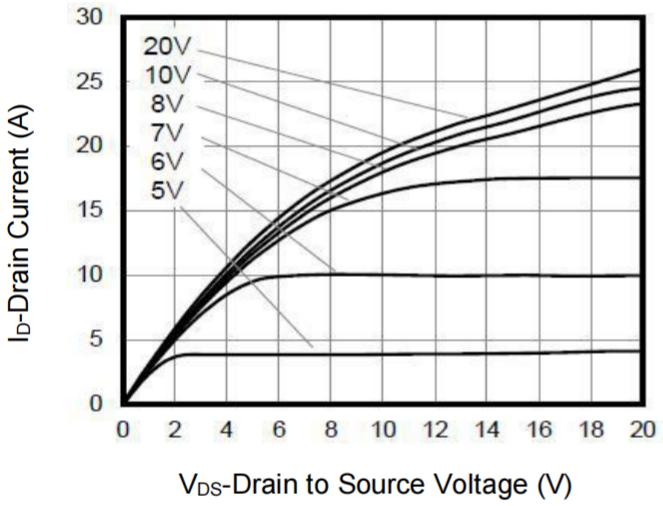

Figure 3. Output Characteristics

.

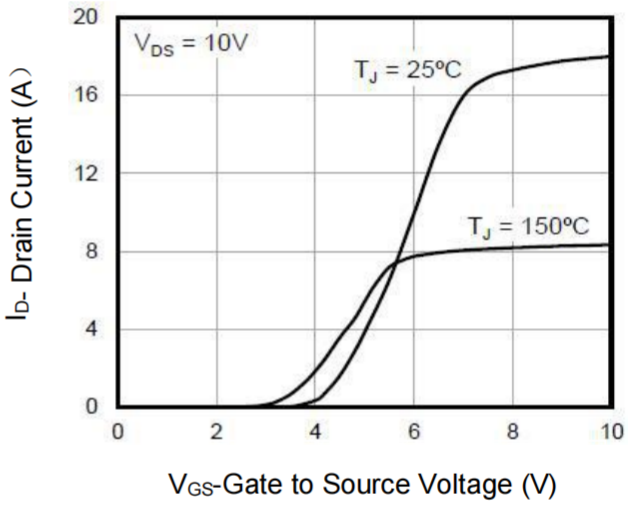

Figure 4 Transfer Charateristics

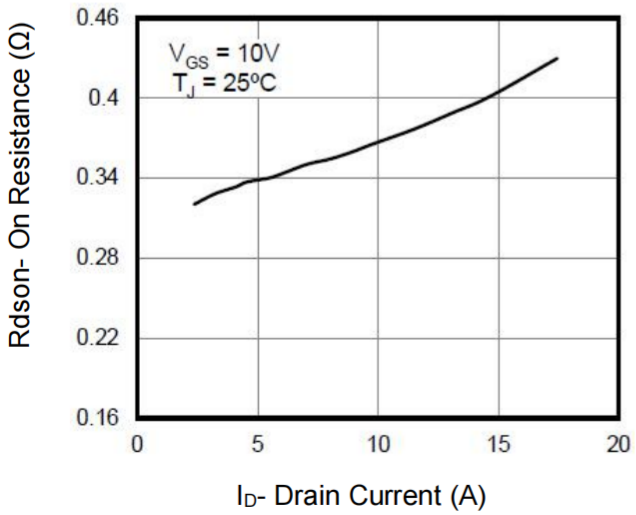

Figure 5. On Resistance vs. Drain Current

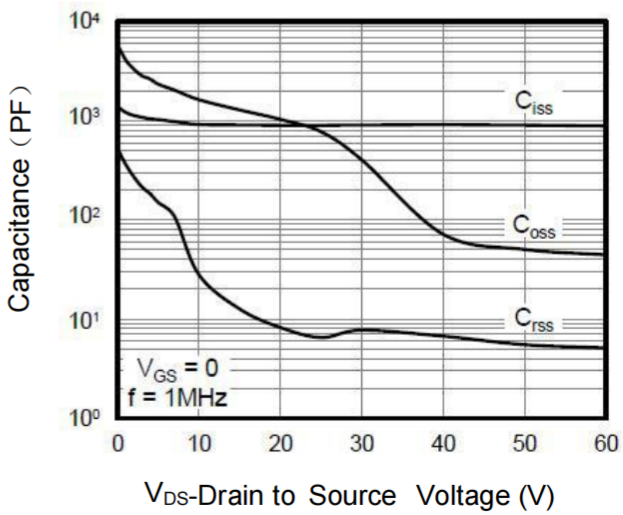

Figure 6. Capacitance

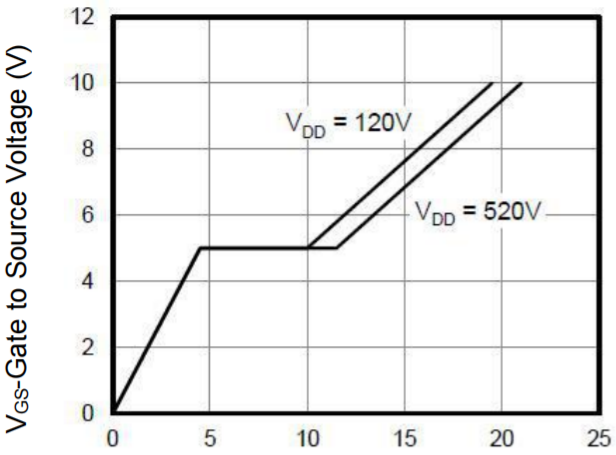

Figure 7. Gate Charge

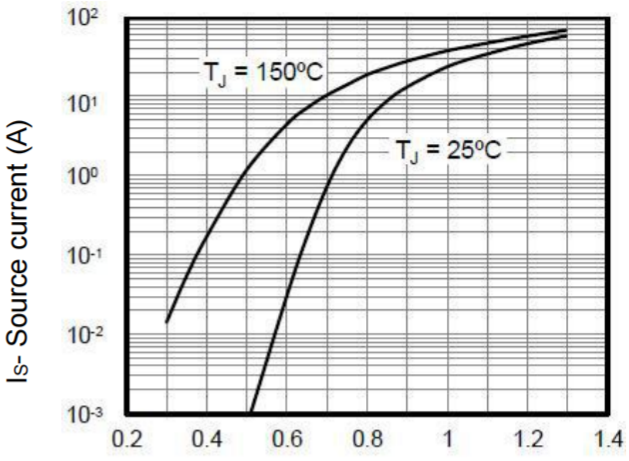

Figure 8. Body Diode Forward Voltage

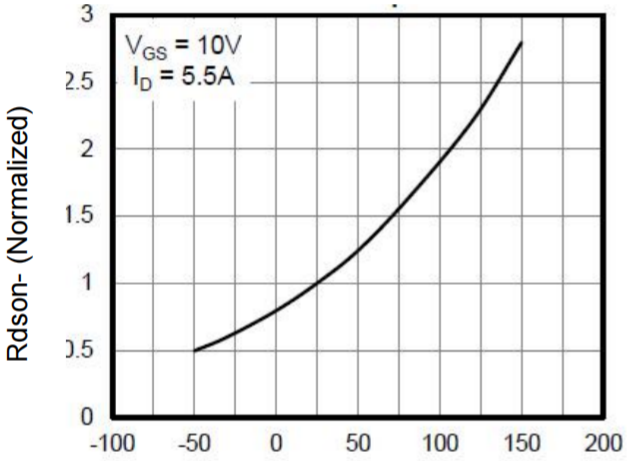

Figure 9. Rdson vs T_J

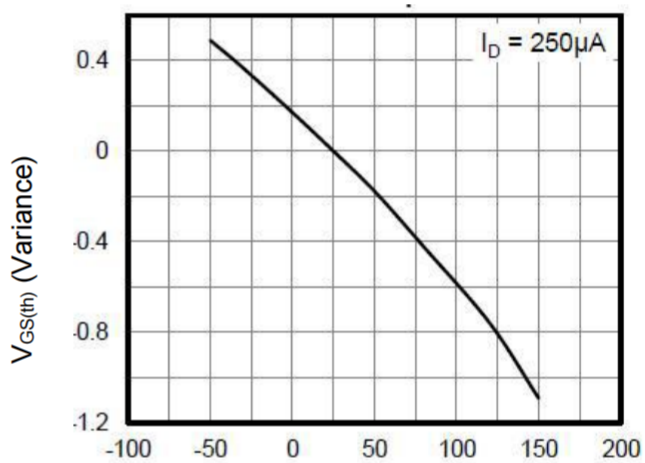

Figure 10. Vth vs T_J

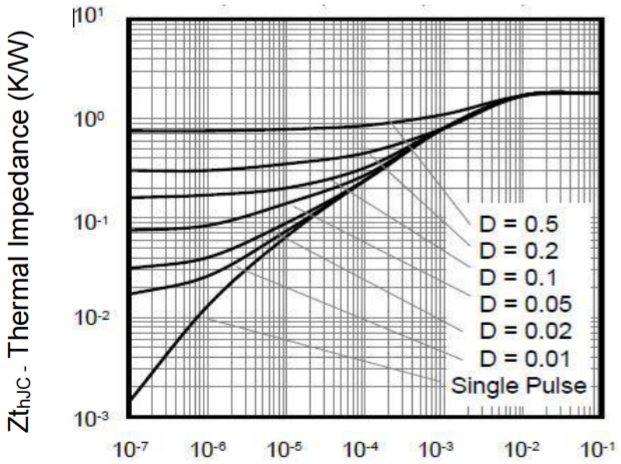

Figure 11. Transient Thermal Impedance (TO-252, TO-220)

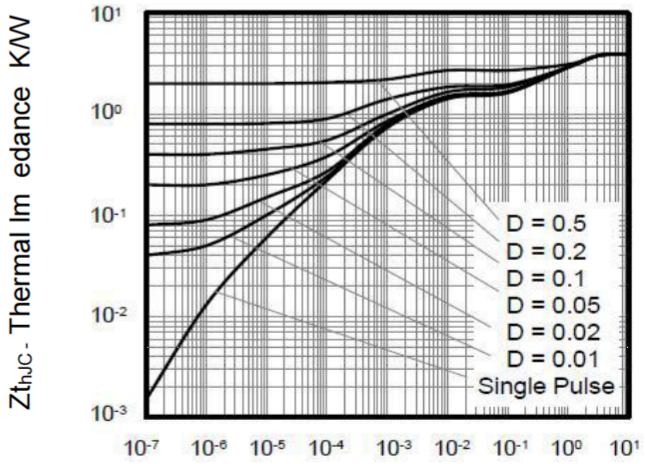

Figure 12. Transient Thermal Impedance (TO-220F)

TO-252 Package information

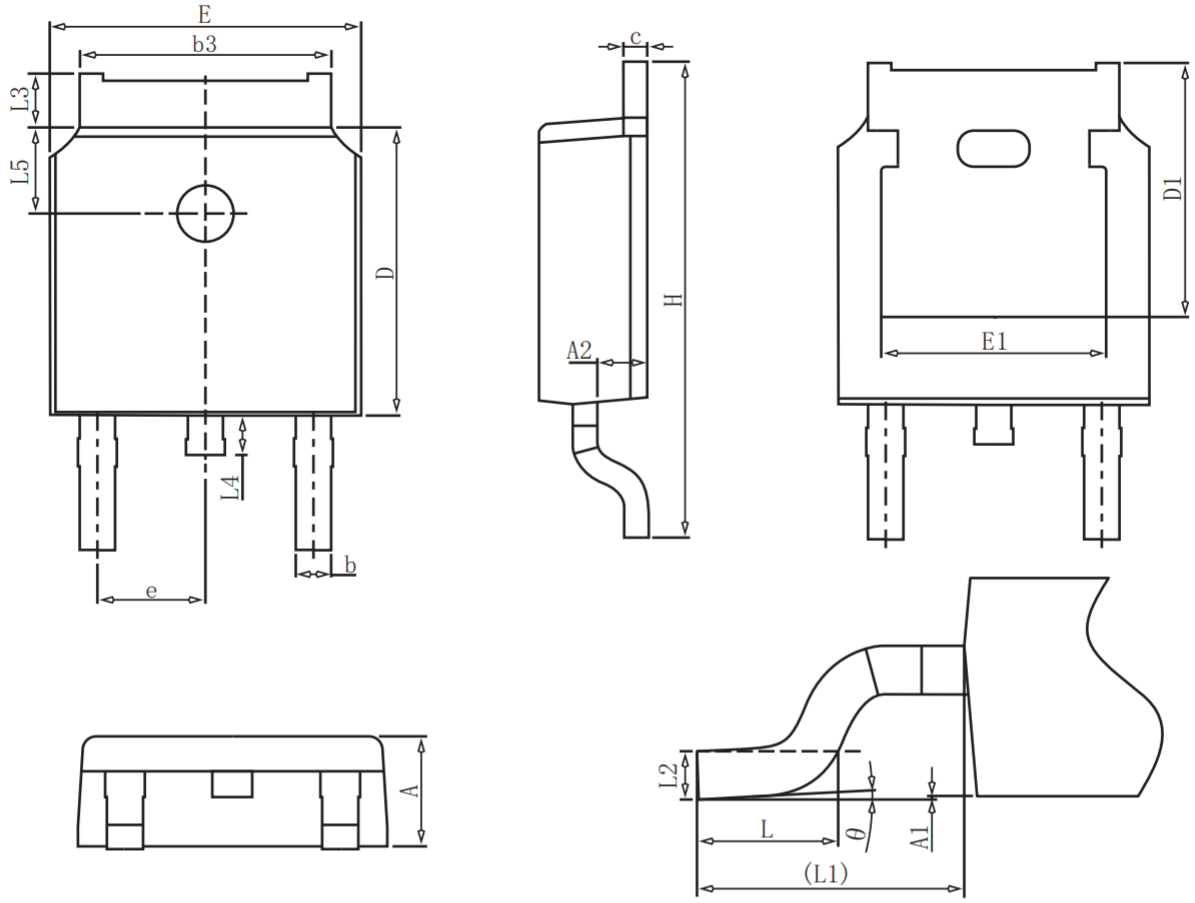

COMMON DIMENSIONS

SYMBOL	mm		
	MIN	NOM	MAX
A	2.20	2.30	2.40
A1	0.00	–	0.20
A2	0.97	1.07	1.17
b	0.68	0.78	0.90
b3	5.20	5.33	5.50
c	0.43	0.53	0.63
D	5.98	6.10	6.22
D1		5.30REF	
E	6.40	6.60	6.80
E1	4.63	–	–
e		2.286BSC	
H	9.40	10.10	10.50
L	1.38	1.50	1.75
L1		2.90REF	
L2		0.51BSC	
L3	0.88	–	1.28
L4	0.50	–	1.00
L5	1.65	1.80	1.95
θ	0°	–	8°

TO-220 Package information

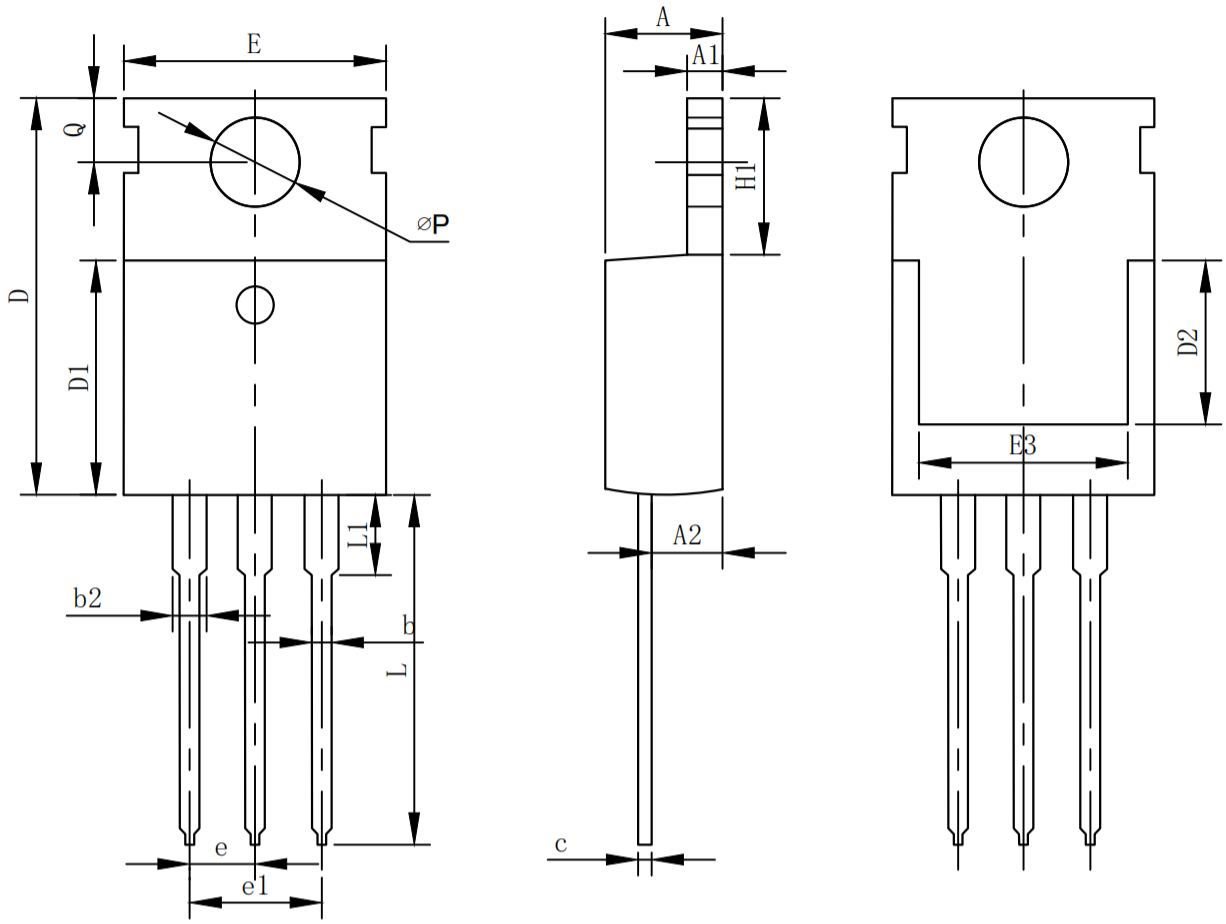

COMMONDIMENSIONS

SYMBO	mm		
	MIN	NOM	MAX
A	4.37	4.57	4.70
A1	1.25	1.30	1.40
A2	2.20	2.40	2.60
b	0.70	0.80	0.95
b2	1.70	1.27	1.47
c	0.45	0.50	0.60
D	15.10	15.60	16.10
D1	8.80	9.10	9.40
D2	5.50	-	-
E	9.70	10.00	10.30
E3	7.00	-	-
e	2.54BSC		
e1	5.08BSC		
H1	6.25	6.50	6.85
L	12.75	13.50	13.80
L1	-	3.10	3.40
ØP	3.40	3.60	3.80
Q	2.60	2.80	3.00

TO-220F Package information

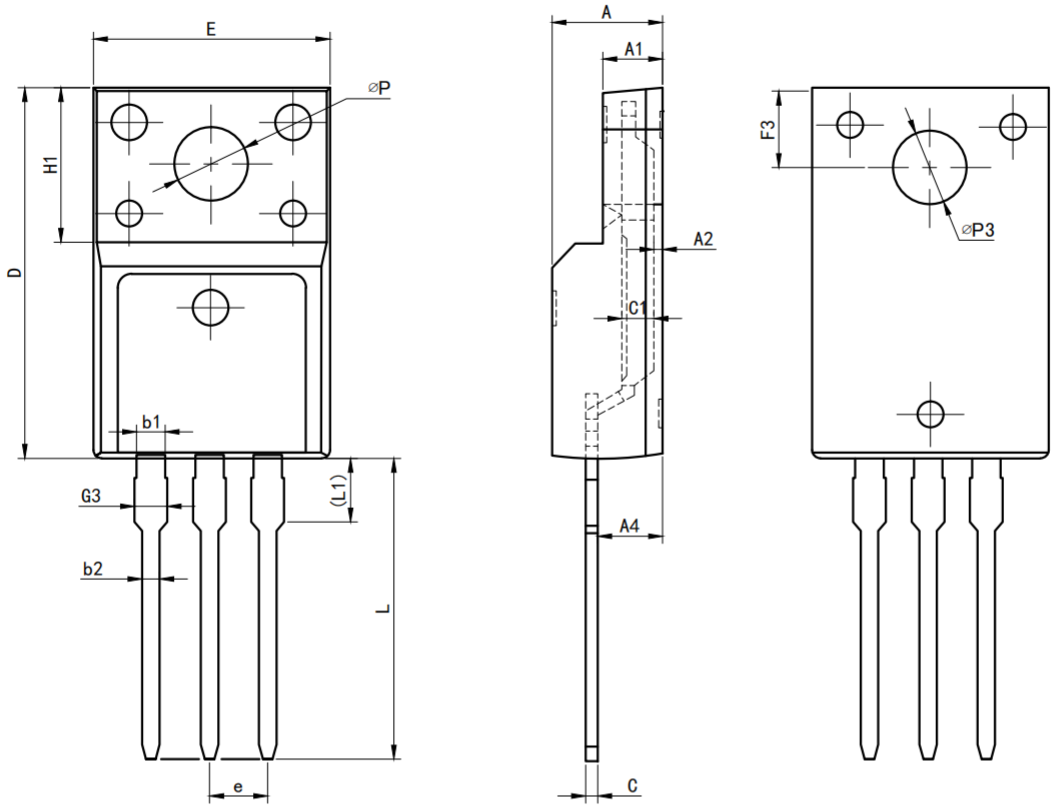

COMMOND IMENSIONS

SYMBO	mm		
	MIN	NOM	MAX
E	9.96	10.16	10.36
A	4.50	4.70	4.90
A1	2.34	2.54	2.74
A2	0.30	0.45	0.60
A4	2.56	2.76	2.96
c	0.40	0.50	0.65
c1	1.20	1.30	1.35
D	15.57	15.87	16.17
H1	6.70REF		
e	2.54BSC		
L	12.68	12.98	13.28
L1	2.93	3.03	3.13
ØP	3.03	3.18	3.38
ØP3	3.15	3.45	3.65
F3	3.15	3.30	3.45
G3	1.25	1.35	1.55
b1	1.18	1.28	1.43
b2	0.70	0.80	0.95