N-Channel Enhancement Mode Power MOSFET

Description

The GC125N65FF uses advanced trench technology to provide excellent $R_{DS(ON)}$, low gate charge. It can be used in a wide variety of applications.

General Features

- V_{DS} 650V
- I_D (at V_{GS} = 10V) 25A
- $R_{DS(ON)}$ (at V_{GS} = 10V) < 125mΩ
- 100% Avalanche Tested
- RoHS Compliant
- Ultra-fast body diode

Application

- Power switch
- DC/DC converters

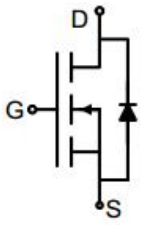

Schematic diagram

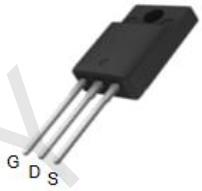

TO-220F

Ordering Information

Device	Package	Marking	Packaging
GC125N65FF	TO-220F	GC125N65F	50pcs/Tube

Absolute Maximum Ratings T_C = 25ºC, unless otherwise noted

Parameter		Symbol	Value	Unit
Drain-Source Voltage		V_{DS}	650	V
Continuous Drain Current	T_C = 25ºC	I_D	25	A
	T_C = 100ºC		16	
Pulsed Drain Current (note1)		I_{DM}	75	A
Gate-Source Voltage		V_{GS}	±30	V
Power Dissipation		P_D	42	W
Single pulse avalanche energy （note2）		E_{AS}	300	mJ
Operating Junction and Storage Temperature Range		T_J, T_{stg}	-55 To 150	ºC

Thermal Resistance

Parameter	Symbol	Value	Unit
Thermal Resistance, Junction-to-Ambient	R_{thJA}	62	ºC/W
Maximum Junction-to-Case	R_{thJC}	2.97	ºC/W

PRELIMINARY

Specifications T_J = 25ºC, unless otherwise noted

Parameter	Symbol	Test Conditions	Value			Unit
			Min.	Typ.	Max.	
Static Parameters						
Drain-Source Breakdown Voltage	$V_{(BR)DSS}$	V_{GS} = 0V, I_D = 250μA	650	--	--	V
Zero Gate Voltage Drain Current	I_{DSS}	V_{DS} = 650V, V_{GS} = 0V	--	--	5	μA
Gate-Source Leakage	I_{GSS}	V_{GS} = ±30V	--	--	±100	nA
Gate-Source Threshold Voltage	$V_{GS(th)}$	V_{DS} = V_{GS}, I_D = 250μA	3.2	--	4.6	V
Drain-Source On-Resistance	$R_{DS(on)}$	V_{GS} = 10V, I_D = 12A	--	103	125	mΩ
Forward Transconductance	g_{FS}	V_{DS} = 20V, I_D =12 A	--	17	--	S
Dynamic Parameters						
Input Capacitance	C_{iss}	V_{GS} = 0V, V_{DS} = 100V, f = 0.1MHz	--	1580	--	pF
Output Capacitance	C_{oss}		--	88	--	
Reverse Transfer Capacitance	C_{rss}		--	1.2	--	
Total Gate Charge	Q_g	V_{DD} = 480V, I_D = 12A, V_{GS} = 10V	--	52	--	nC
Gate-Source Charge	Q_{gs}		--	14	--	
Gate-Drain Charge	Q_{gd}		--	30	--	
Turn-on Delay Time	$t_{d(on)}$	V_{DD} = 400V, I_D = 12A, R_G = 2Ω	--	25	--	ns
Turn-on Rise Time	t_r		--	50	--	
Turn-off Delay Time	$t_{d(off)}$		--	65	--	
Turn-off Fall Time	t_f		--	28	--	
Drain-Source Body Diode Characteristics						
Continuous Body Diode Current	I_S	T_C = 25ºC	--	--	25	A
Body Diode Voltage	V_{SD}	T_J = 25ºC, I_{SD} = 12A, V_{GS} = 0V	--	--	1.2	V
Reverse Recovery Charge	Qrr	I_F = 12A, V_{GS} = 0V di/dt=100A/us	--	0.4	--	μC
Reverse Recovery Time	Trr		--	97	--	ns

PRELIMINARY

Notes

1. Repetitive Rating: Pulse width limited by maximum junction temperature
2. EAS condition : Tj=25℃ ,VDD=50V,VGS=10V,L=30mH,Rg=25Ω
3. Identical low side and high side switch with identical R_G

Gate Charge Test Circuit

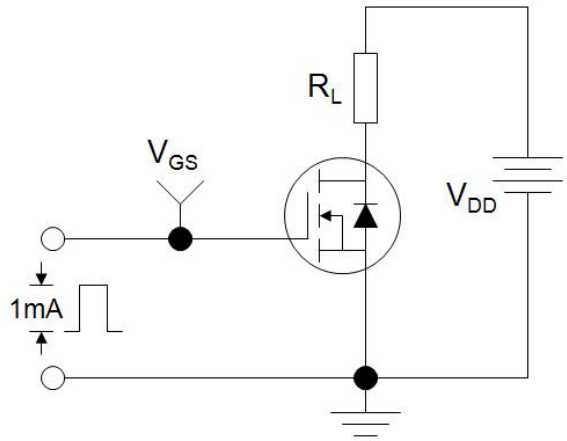

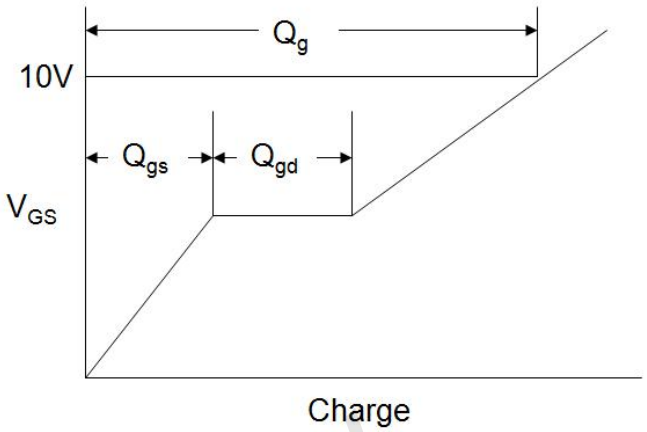

Switch Time Test Circuit

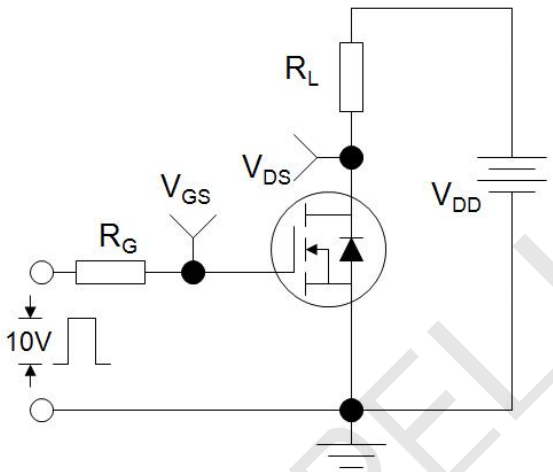

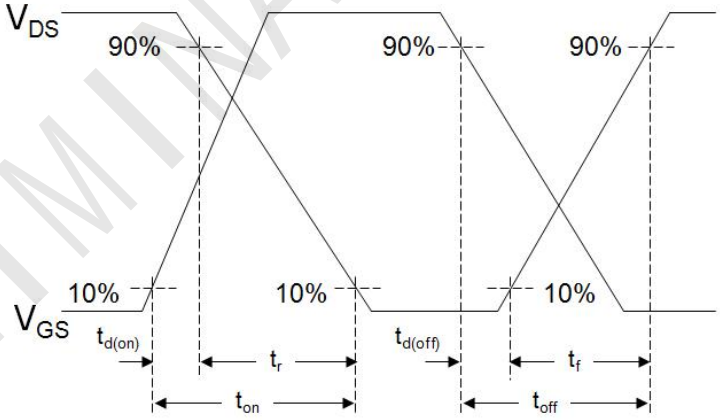

EAS Test Circuit

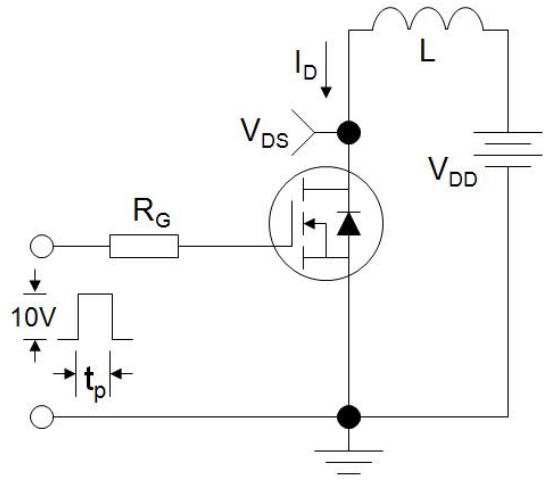

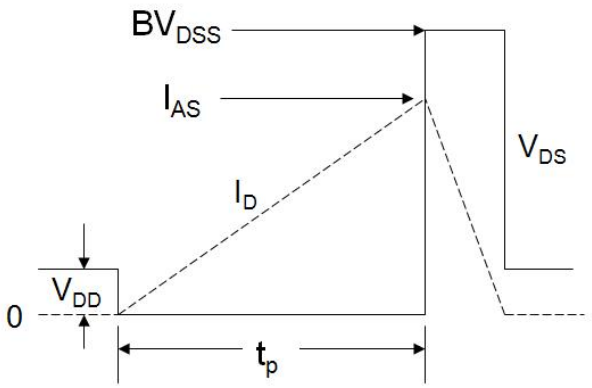

PRELIMINARY

Typical Characteristics T_J = 25ºC, unless otherwise noted

Figure 1. Output Characteristics

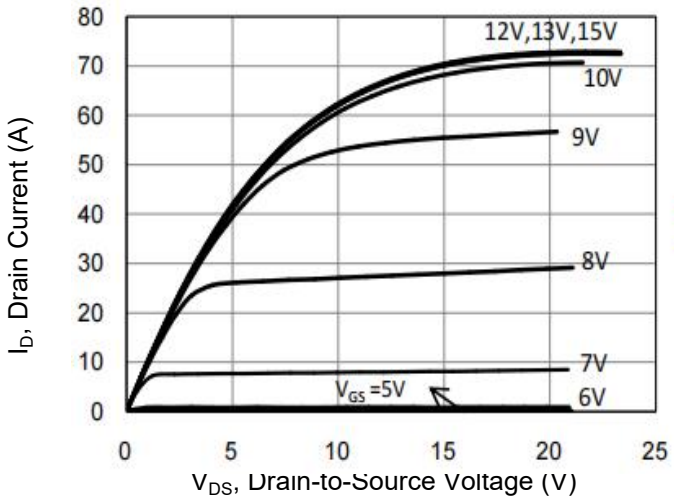

Figure 2. Transfer Characteristics

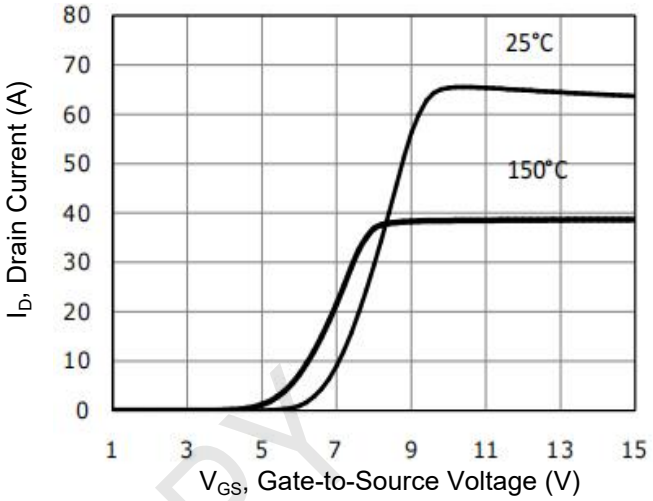

Figure 3. Drain Source On Resistance

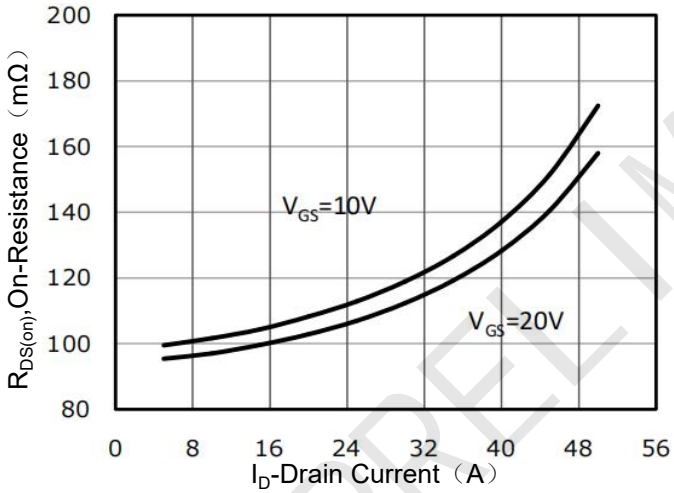

Figure 4. Gate Charge

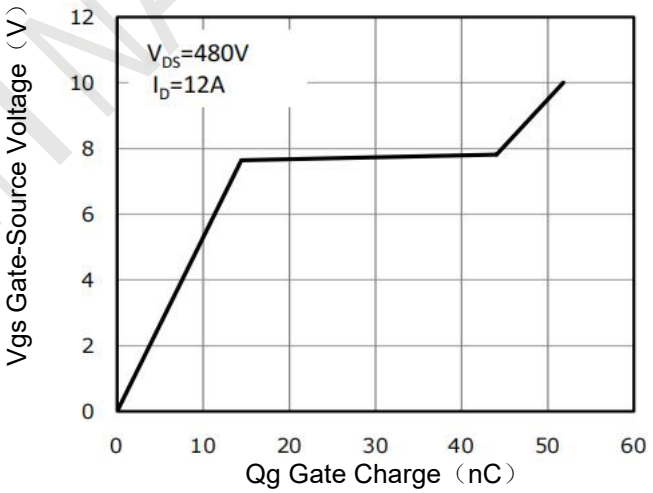

Figure 5. Capacitance

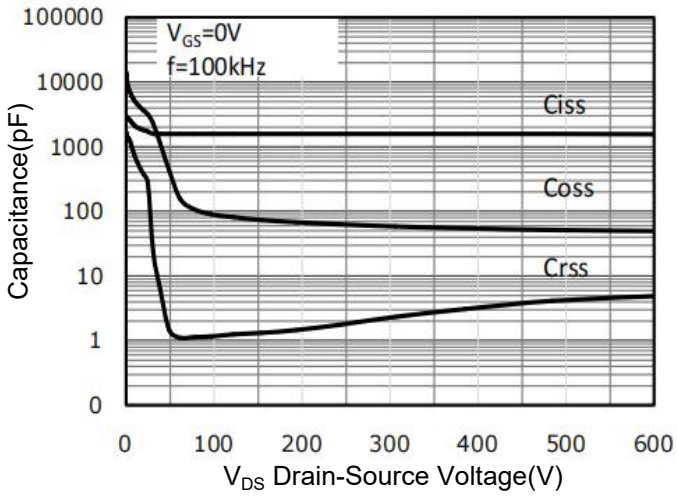

Figure 6. Source-Drain Diode Forward

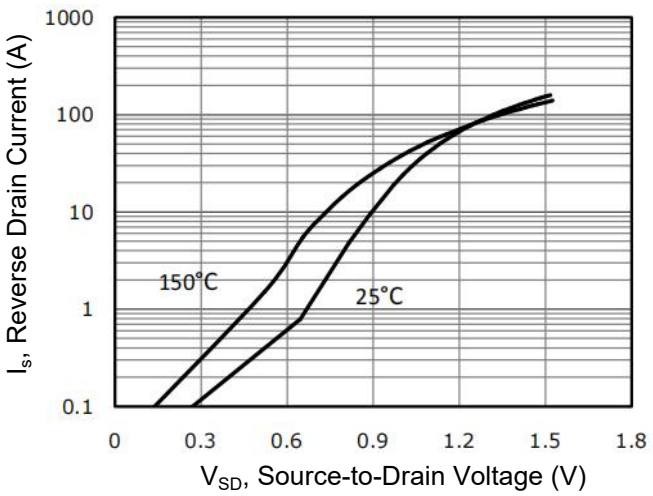

PRELIMINARY

Typical Characteristics T_J = 25ºC, unless otherwise noted

Figure 7. Drain-Source On-Resistance

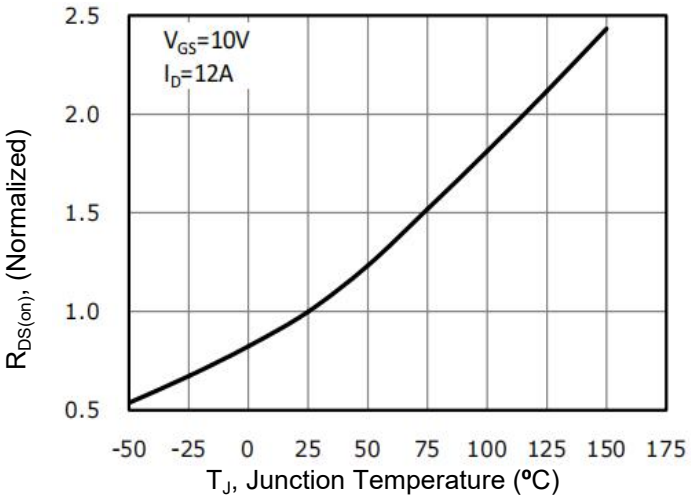

Figure 8. Safe Operation Area

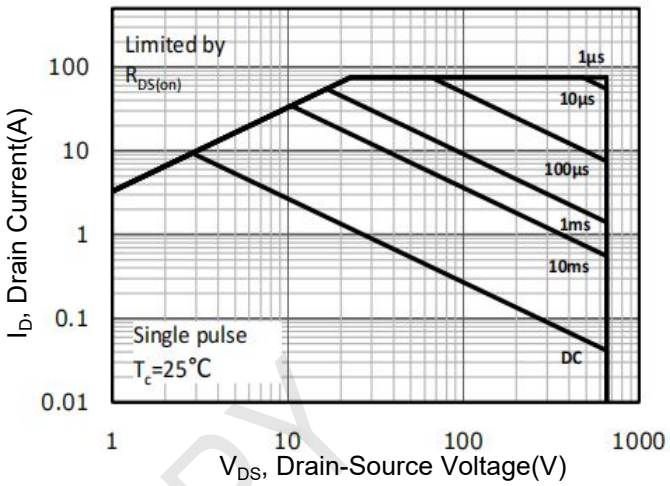

Figure 9. Maximum Continuous Drain Current vs Case Temperature

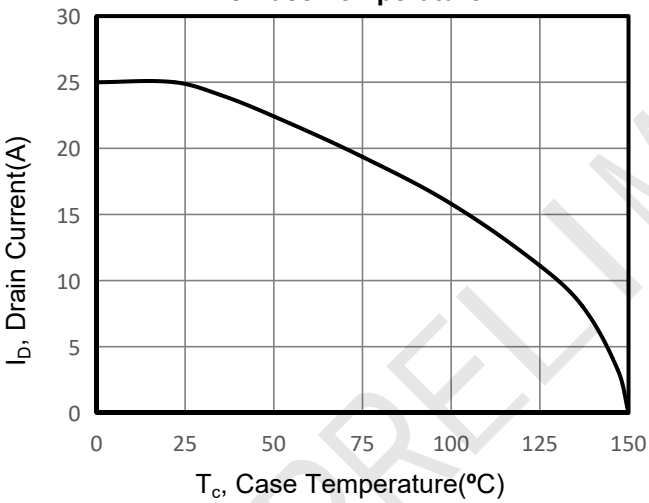

Figure 10. Normalized Maximum Transient Thermal Impedance

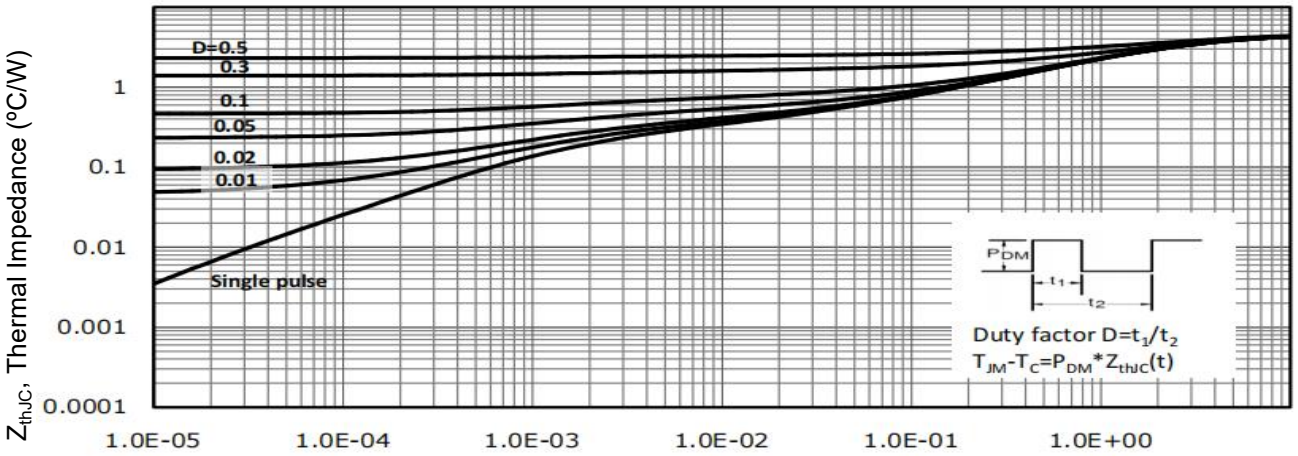

PRELIMINARY

TO-220F Package Information

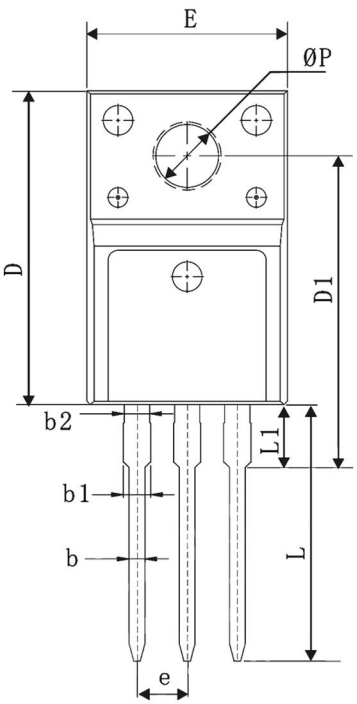

TOP VIEW

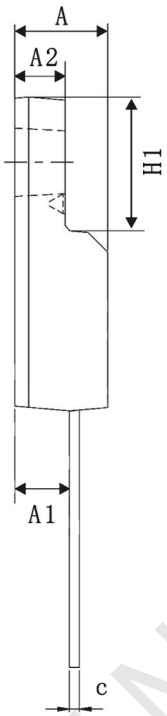

SIDE VIEW

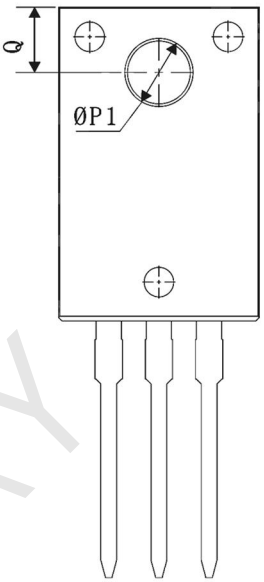

Back VIEW

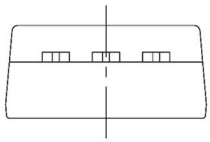

BOTTOM VIEW

COMMON DIMENSIONS
(UNITS OF MEASURE=mm)

SYMBOL	MIN	NOM	MAX
A	4.50	4.70	4.90
A1	2.56	2.76	2.96
A2	2.34	2.54	2.74
b	0.70	0.80	0.90
b1	1.28	1.38	1.48
b2	1.18	1.28	1.38
c	0.40	0.50	0.60
D	15.67	15.87	16.07
D1	15.50	15.75	16.00
e	2.54BSC		
E	9.96	10.16	10.36
H1	6.75REF		
L	12.78	12.98	13.18
L1			3.50
Q	3.20	3.30	3.40
ØP	3.08	3.18	3.28
ØP1	3.35	3.45	3.55

PRELIMINARY