Description

The GC20N60 uses advanced super junction technology and design to provide excellent $R_{DS(ON)}$, low gate charge and operation. This device is suitable for industry's AC-DC SMPS requirement for PFC, AC/DC power conversion, and industrial power application.

General Features

- New technology for high voltage device
- Low on-resistance and low conduction losses
- Small Package
- Ultra Low Gate Charge cause lower driving requirement
- 100% Avalanche Tested
- RoHS Compliant

Application

- Power Factor Correction (PFC)
- Switched Mode Power Supply (SMPS)
- Uninterruptible Power Supply (UPS)

V_{DS}	$R_{DS(ON)}$ @ 10V (Max)	I_D
600V	190mΩ	20A

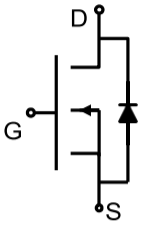

Schematic Diagram



Marking and Pin Assignment

■ Ordering Information

Part Number	Marking	Case	Packaging
GC20N60K	GC20N60	TO-252	2500pcs/Reel
GC20N60T	GC20N60	TO-220	50pcs/Tube
GC20N60F	GC20N60	TO-220F	50pcs/Tube

Absolute Maximum Ratings (T_C=25℃ unless otherwise noted)

Parameter	Symbol	Value		Unit
		TO-252 TO-220	TO-220F	
Drain-Source Voltage	V_{DS}	600		V
Gate-Source Voltage	V_{GS}	±30		V
Drain Current-Continuous	I_D	20		A
Drain Current-Pulsed (Note 1)	I_{DM}	60		A
Single Pulse Avalanche Energy (Note 2)	E_{AS}	500		mJ
Avalanche Current (Note 1)	I_{AR}	10		A
Repetitive Avalanche Energy (Note 1)	E_{AR}	1		mJ
Maximum Power Dissipation	P_D	208	34.5	W
Operating Junction and Storage Temperature Range	T_J,T_{STG}	-55 To 150		℃

Thermal Characteristic

Parameter	Symbol	Value		Unit
		TO-252 TO-220	TO-220F	
Thermal Resistance,Junction-to-Case	R_{thJC}	0.6	3.6	℃/W
Thermal Resistance,Junction-to-Ambient (Note 2)	R_{thJA}	62	80	℃/W

Electrical Characteristics (T_J=25℃unless otherwise noted)

Parameter	Symbol	Condition	Min	Typ	Max	Unit
Off Characteristics						
Drain-Source Breakdown Voltage	BV_{DSS}	V_{GS}=0V, I_D=250μA	600	-	-	V
Zero Gate Voltage Drain Current (T_J=25℃)	I_{DSS}	V_{DS}=600V, V_{GS}=0V	-	-	1	μA
Zero Gate Voltage Drain Current (T_J=150℃)	I_{DSS}	V_{DS}=600V, V_{GS}=0V	-	-	100	μA
Gate-Body Leakage Current	I_{GSS}	V_{GS}=±30V, V_{DS}=0V	-	-	±100	nA
On Characteristics (Note 3)						
Gate Threshold Voltage	$V_{GS(th)}$	V_{DS}=V_{GS},I_D=250μA	2	-	4	V
Drain-Source On-State Resistance	$R_{DS(ON)}$	V_{GS}=10V, I_D=10A	-	-	190	mΩ
Forward Transconductance	g_{FS}	V_{DS}=10V,I_D=10A	-	-	-	S
Dynamic Characteristics (Note4)						
Input Capacitance	C_{lss}	V_{DS}=50V,V_{GS}=0V, f=1.0MHz	-	2140	-	PF
Output Capacitance	C_{oss}		-	300	-	PF
Reverse Transfer Capacitance	C_{rss}		-	18	-	PF
Switching Characteristics (Note 4)						
Turn-on Delay Time	$t_{d(on)}$	V_{DD}=480V,I_D=20A R_{GEN}=25Ω	-	48	104	nS
Turn-on Rise Time	t_r		-	108	220	nS
Turn-Off Delay Time	$t_{d(off)}$		-	176	360	nS
Turn-Off Fall Time	t_f		-	50	108	nS
Total Gate Charge	Q_g	V_{DD}=480V, I_D=20A, V_{GS}=10V	-	54	-	nC
Gate-Source Charge	Q_{gs}		-	10	-	nC
Gate-Drain Charge	Q_{gd}		-	20	-	nC
Drain-Source Diode Characteristics						
Continuous Body Diode Current (Note 2)	I_S	T_C=25℃	-	-	20	A
Pulsed Diode Forward Current	I_{SM}	T_C=25℃	-	-	60	A
Diode Forward Voltage (Note 3)	V_{SD}	T_J=25℃, I_{SD}=20A,V_{GS}=0V	-	-	1.4	V
Reverse Recovery Time	t_{rr}	V_R=480V, I_F=I_S, di_F/dt = 100A/μs	-	440	-	nS
Reverse Recovery Charge	Q_{rr}		-	5	-	μC
Peak Reverse Recovery Current	I_{rrm}		-	24	-	A

Notes:

1. Repetitive Rating: Pulse width limited by maximum junction temperature.
2. I_{AS} = 10A, V_{DD} = 50V, R_G = 25Ω, Starting T_J = 25°C.
3. Pulse Test: Pulse Width ≤ 300μs, Duty Cycle ≤ 1%.
4. Guaranteed by design, not subject to production

Typical Electrical And Thermal Characteristics

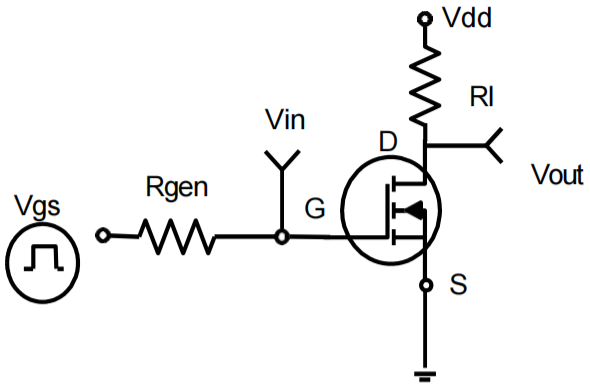

Figure 1. Switching Test Circuit

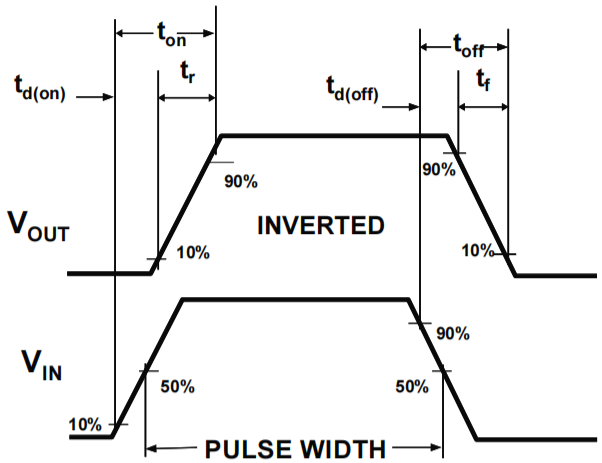

Figure 2. Switching Waveforms

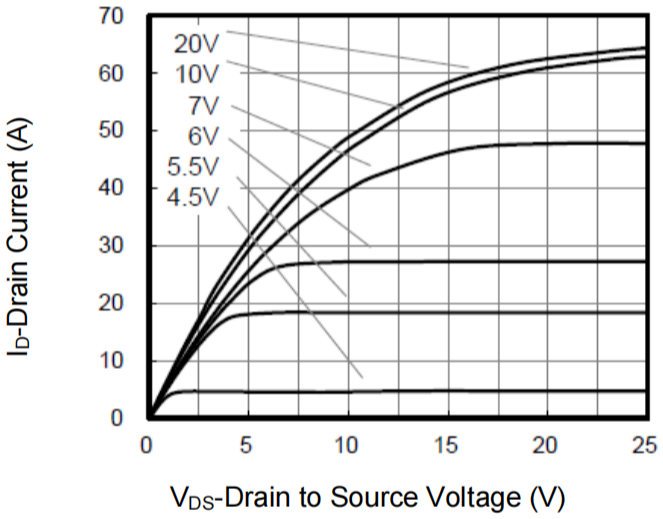

Figure 3. Output Characteristics

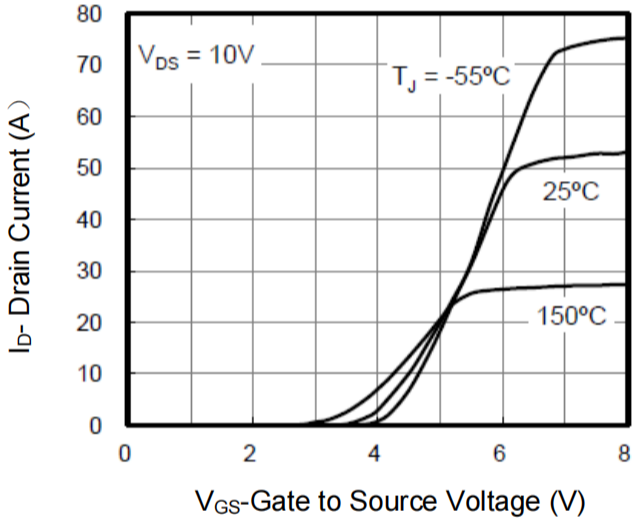

Figure 4. Transfer Charateristics

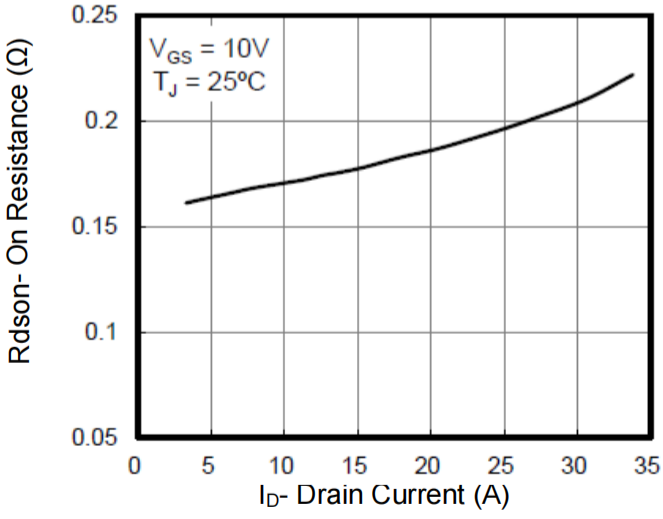

Figure 5. On Resistance vs. Drain Current

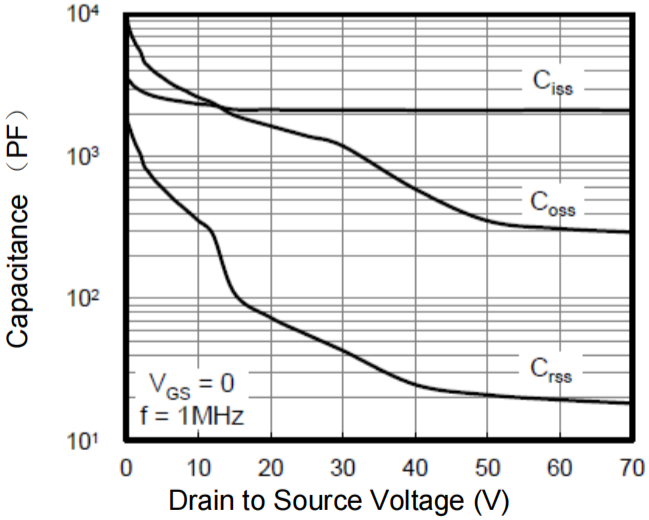

Figure 6. Capacitance

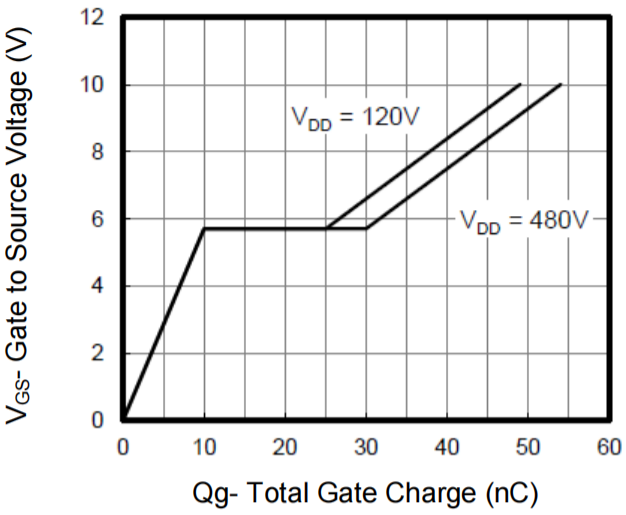

Figure 7. Gate Charge

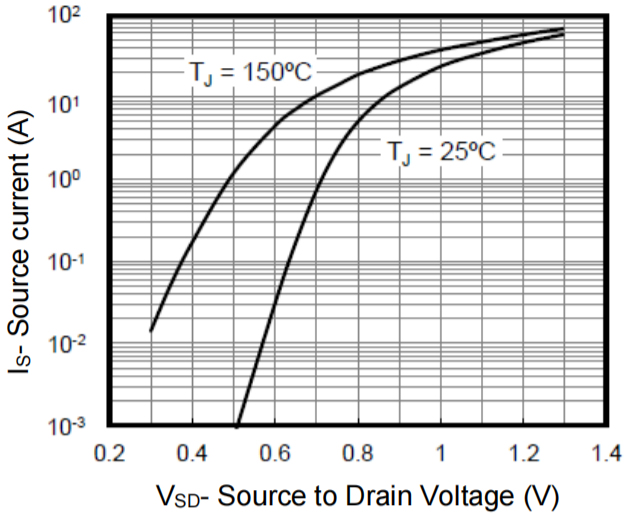

Figure 8. Body Diode Forward Voltage

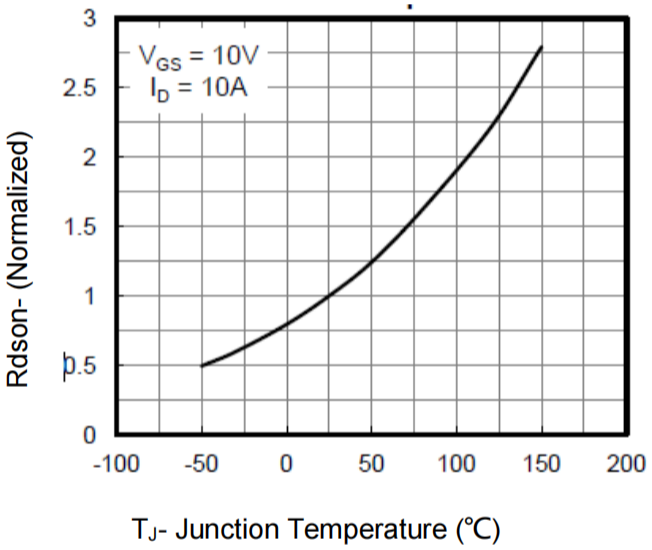

Figure 9. Rdson vs T_J

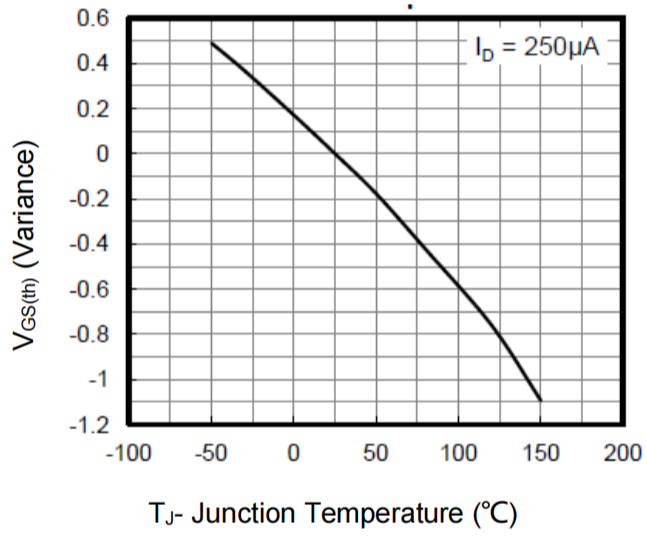

Figure 10. Vth vs T_J

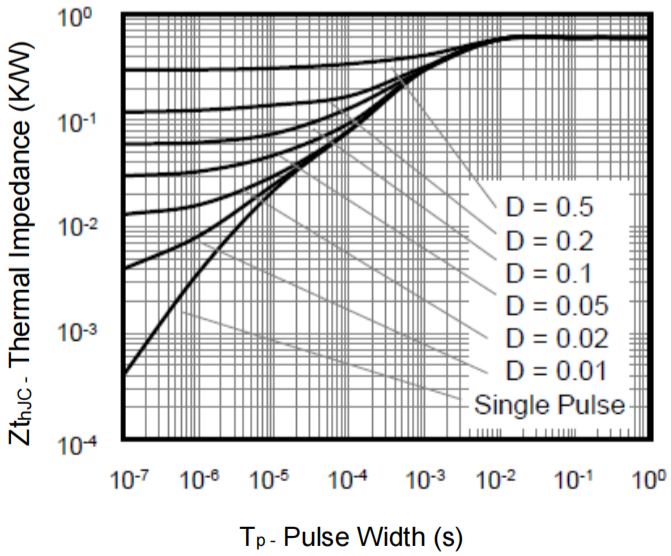

Figure 11. Transient Thermal Impedance (TO-252, TO-220)

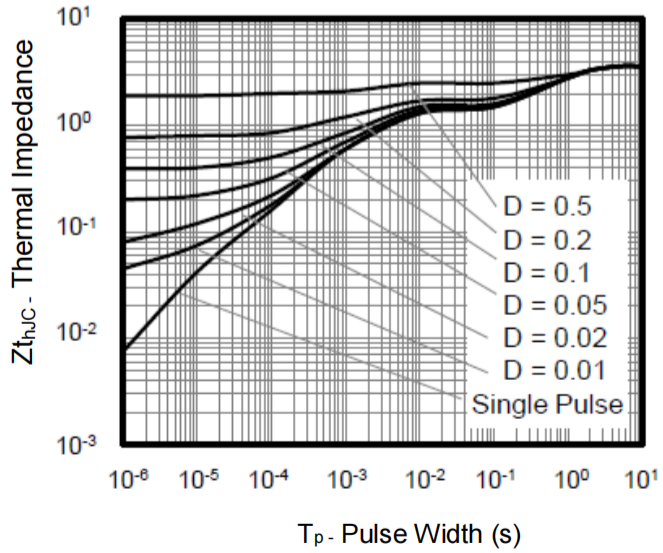

Figure 12. Transient Thermal Impedance (TO-220F)

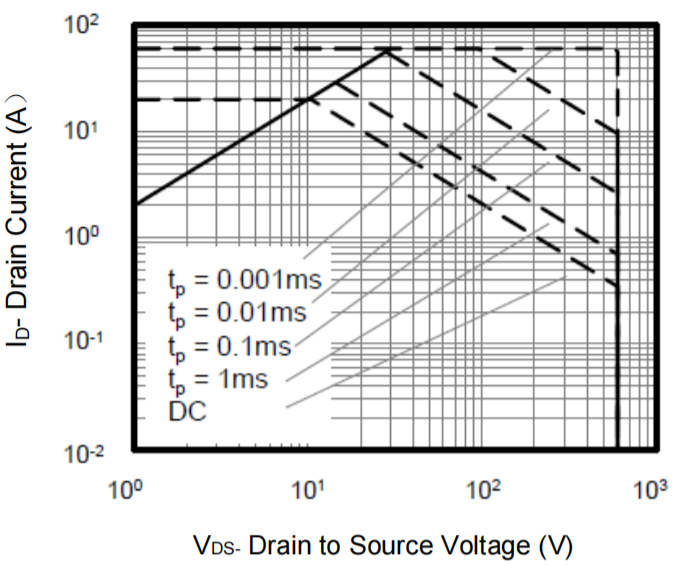

Figure 13. Safe Operating Area (TO-252, TO-220)

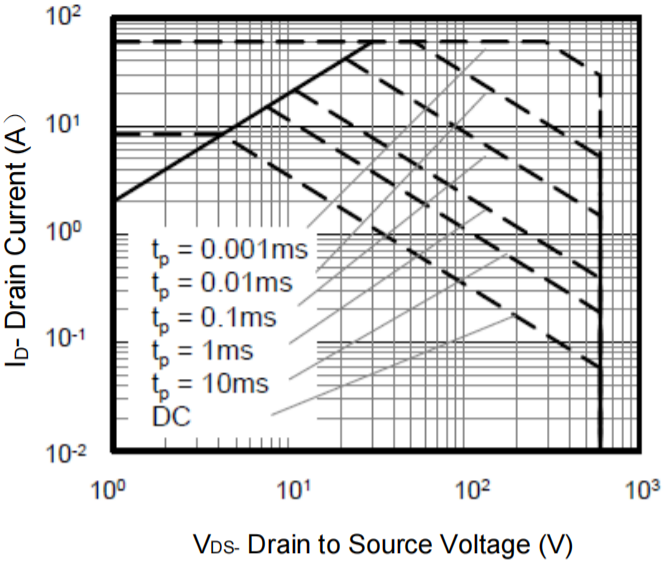

Figure 14. Safe Operating Area (TO-220F)

TO-252 Package information

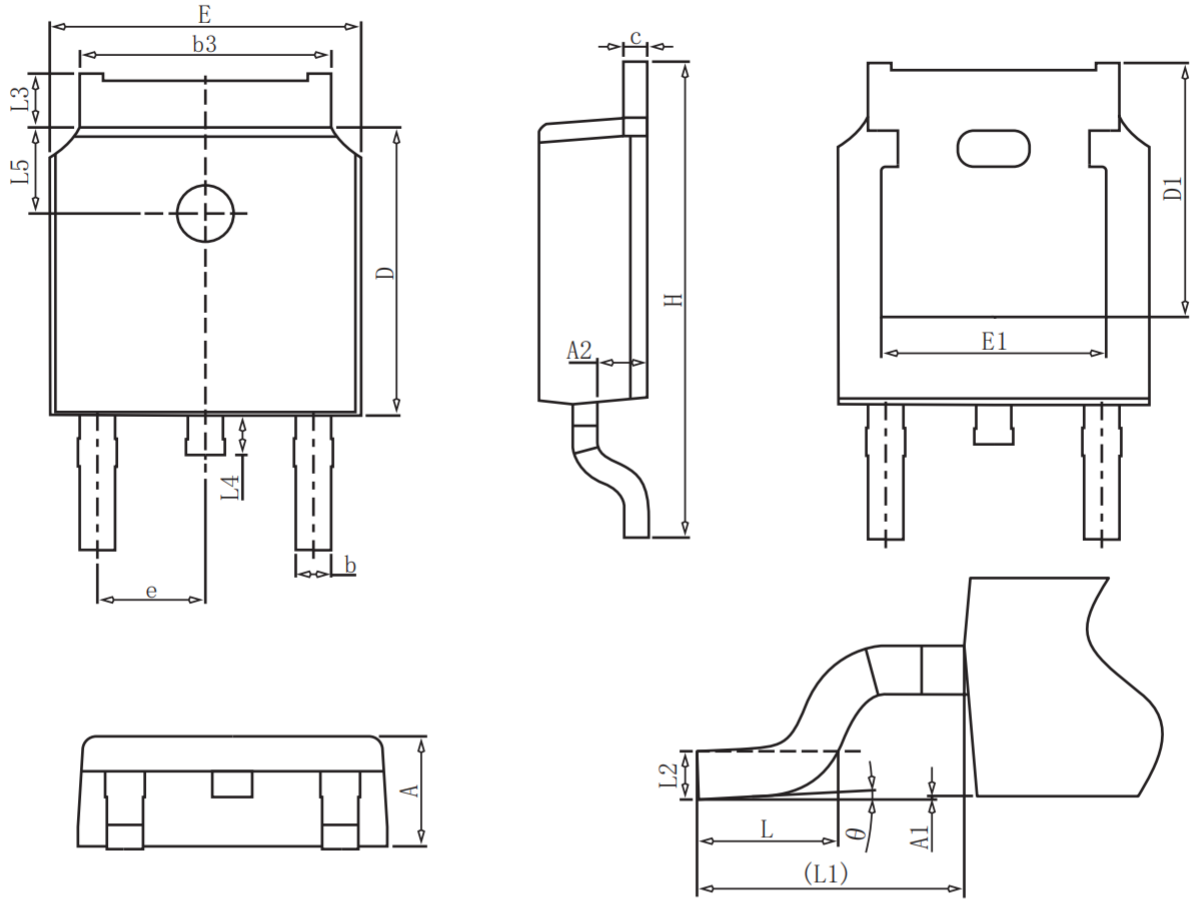

COMMON DIMENSIONS

SYMBOL	mm		
	MIN	NOM	MAX
A	2.20	2.30	2.40
A1	0.00	–	0.20
A2	0.97	1.07	1.17
b	0.68	0.78	0.90
b3	5.20	5.33	5.50
c	0.43	0.53	0.63
D	5.98	6.10	6.22
D1		5.30REF	
E	6.40	6.60	6.80
E1	4.63	–	–
e		2.286BSC	
H	9.40	10.10	10.50
L	1.38	1.50	1.75
L1		2.90REF	
L2		0.51BSC	
L3	0.88	–	1.28
L4	0.50	–	1.00
L5	1.65	1.80	1.95
θ	0°	–	8°

TO-220 Package information

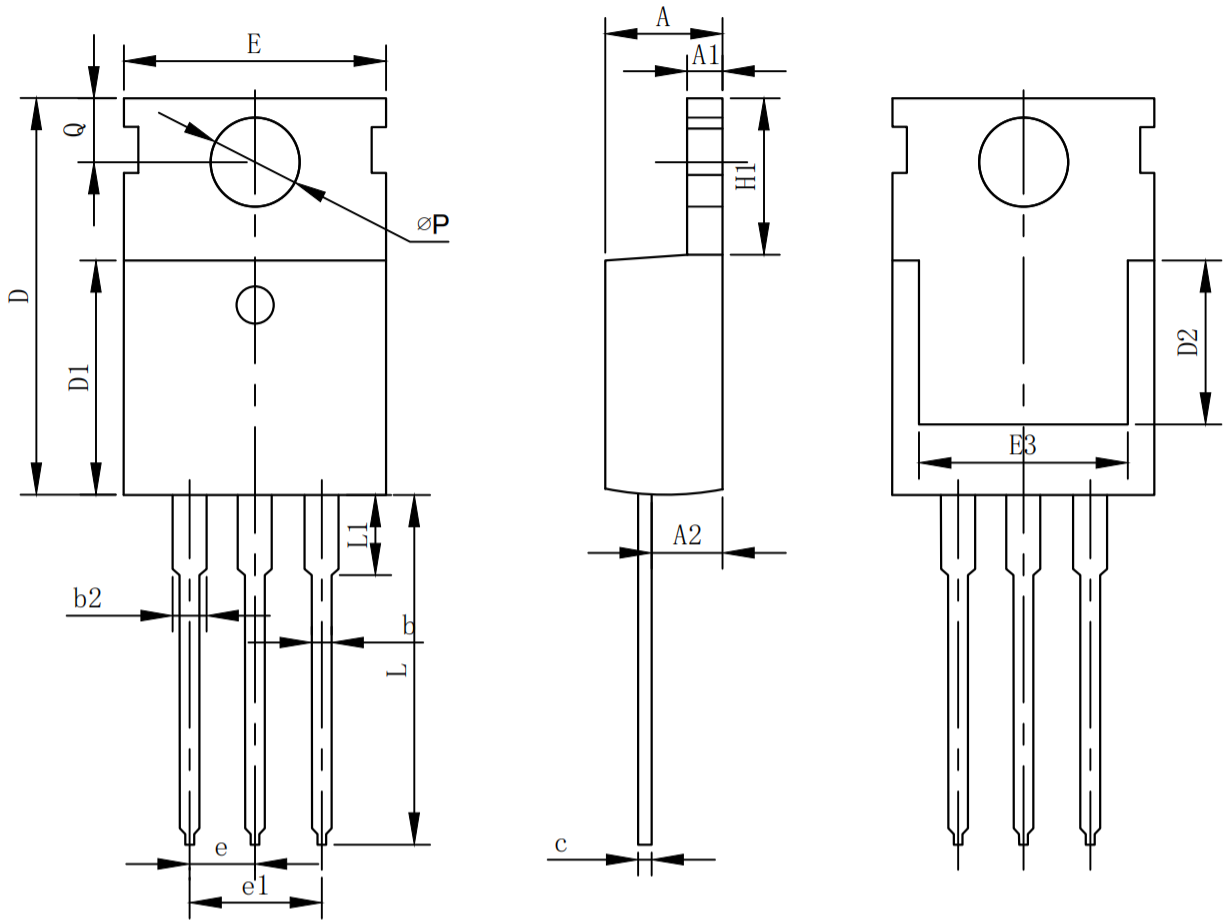

COMMONDIMENSIONS

SYMBO	mm		
	MIN	NOM	MAX
A	4.37	4.57	4.70
A1	1.25	1.30	1.40
A2	2.20	2.40	2.60
b	0.70	0.80	0.95
b2	1.70	1.27	1.47
c	0.45	0.50	0.60
D	15.10	15.60	16.10
D1	8.80	9.10	9.40
D2	5.50	-	-
E	9.70	10.00	10.30
E3	7.00	-	-
e	2.54BSC		
e1	5.08BSC		
H1	6.25	6.50	6.85
L	12.75	13.50	13.80
L1	-	3.10	3.40
ØP	3.40	3.60	3.80
Q	2.60	2.80	3.00

TO-220F Package information

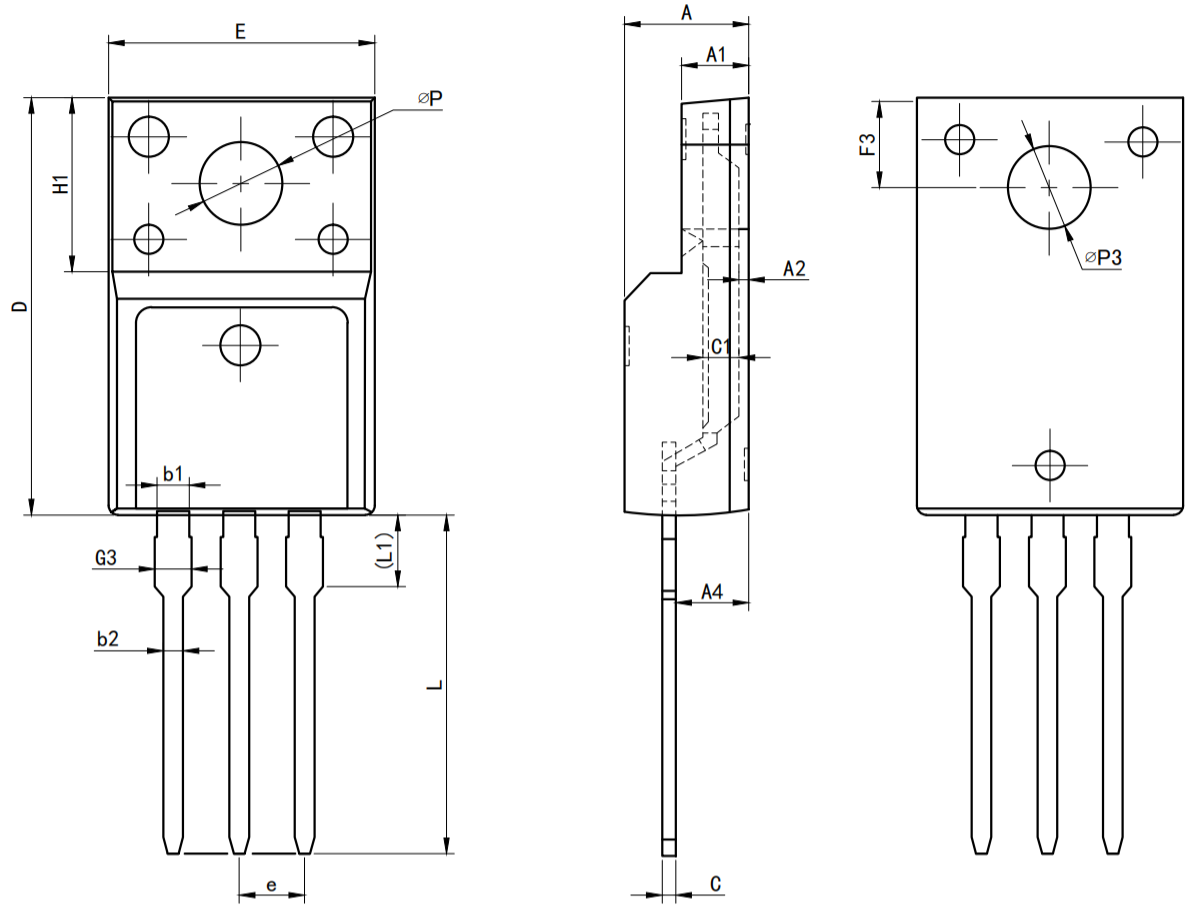

COMMOND I MENS I ONS

SYMBO	mm		
	MIN	NOM	MAX
E	9.96	10.16	10.36
A	4.50	4.70	4.90
A1	2.34	2.54	2.74
A2	0.30	0.45	0.60
A4	2.56	2.76	2.96
c	0.40	0.50	0.65
c1	1.20	1.30	1.35
D	15.57	15.87	16.17
H1	6.70REF		
e	2.54BSC		
L	12.68	12.98	13.28
L1	2.93	3.03	3.13
ØP	3.03	3.18	3.38
ØP3	3.15	3.45	3.65
F3	3.15	3.30	3.45
G3	1.25	1.35	1.55
b1	1.18	1.28	1.43
b2	0.70	0.80	0.95