Description

The GC20N70 uses advanced super junction technology and design to provide excellent $R_{DS(ON)}$ and low gate charge. This device is suitable for industry AC-DC SMPS requirement of PFC, AC/DC power conversion, and other industrial power applications.

General Features

- New technology for high voltage device
- Low on-resistance and low conduction losses
- Small Package
- Ultra Low Gate Charge cause lower driving requirement
- 100% Avalanche Tested
- RoHS Compliant

Application

- Power Factor Correction (PFC)
- Switched Mode Power Supply (SMPS)
- Uninterruptible Power Supply (UPS)

V_{DS}	$R_{DS(ON)}$ @ 10V (Typ)	I_D
700V	170mΩ	20 A

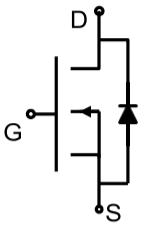

Schematic Diagram



Marking and Pin Assignment

■ Ordering Information

Part Number	Marking	Case	Packaging
GC20N70Q	GC20N70	TO-247	50pcs/Tube
GC20N70T	GC20N70	TO-220	50pcs/Tube
GC20N70F	GC20N70	TO-220F	50pcs/Tube

Absolute Maximum Ratings (T_C=25℃ unless otherwise noted)

Parameter	Symbol	Value		Unit
		TO-247 TO-220	TO-220F	
Drain-Source Voltage	V_{DS}	700		V
Gate-Source Voltage	V_{GS}	±30		V
Drain Current-Continuous (T_C=25℃)	I_D	20		A
Drain Current-Continuous (T_C=100℃)	I_D	12		A
Drain Current-Pulsed (Note 1)	I_{DM}	60		A
Single Pulse Avalanche Energy (Note 2)	E_{AS}	484		mJ
Repetitive Avalanche Energy (Note 1)	E_{AR}	0.7		mJ
Avalanche Current (Note 1)	I_{AR}	3.5		A
Maximum Power Dissipation (T_C=25℃)	P_D	151	34	W
MOSFET dv/dt ruggedness, V_{DS} = 0…480V	dv/dt	50		V/ns
Reverse diode dv/dt, V_{DS} = 0…480V, $I_{SD} \le I_D$	di_F/dt	15		V/μs
Operating Junction and Storage Temperature Range	T_J,T_{STG}	-55 To 150		℃

Thermal Characteristic

Parameter	Symbol	Value		Unit
		TO-247 TO-220	TO-220F	
Thermal Resistance,Junction-to-Case	R_{thJC}	0.83	3.7	℃/W
Thermal Resistance,Junction-to-Ambient (Note 2)	R_{thJA}	62	80	℃/W

Electrical Characteristics (T_A=25℃ unless otherwise noted)

Parameter	Symbol	Condition	Min	Typ	Max	Unit
On/ Off Characteristics						
Drain-Source Breakdown Voltage	BV_{DSS}	V_{GS}=0V I_D=250μA	700	-	-	V
Zero Gate Voltage Drain Current (T_C=25℃)	I_{DSS}	V_{DS}=700V,V_{GS}=0V	-	-	1	μA
Zero Gate Voltage Drain Current (T_C=125℃)	I_{DSS}	V_{DS}=700V,V_{GS}=0V	-	-	100	μA
Gate-Body Leakage Current	I_{GSS}	V_{GS}=±30V,V_{DS}=0V	-	-	±100	nA
On Characteristics (Note 3)						
Gate Threshold Voltage	$V_{GS(th)}$	V_{DS}=V_{GS},I_D=250μA	2.5	-	4.5	V
Drain-Source On-State Resistance	$R_{DS(ON)}$	V_{GS}=10V, I_D=10A	-	170	190	mΩ
Gate resistance	R_G	f = 1.0MHz open drain	-	12	-	Ω
Dynamic Characteristics (Note4)						
Input Capacitance	C_{lss}	V_{DS}=100V,V_{GS}=0 V, F=1.0MHz	-	1724	-	PF
Output Capacitance	C_{oss}		-	61	-	PF
Reverse Transfer Capacitance	C_{rss}		-	6	-	PF
Switching Characteristics (Note 4)						
Turn-on Delay Time	$t_{d(on)}$	V_{DD}=400V, I_D=20A, R_{GEN}=25Ω	-	15	-	ns
Turn-on Rise Time	t_r		-	59	-	ns
Turn-Off Delay Time	$t_{d(off)}$		-	121	-	ns
Turn-Off Fall Time	t_f		-	44	-	ns
Total Gate Charge	Q_g	V_{DD}=520V, I_D=20A, V_{GS}=10V	-	39	-	nC
Gate-Source Charge	Q_{gs}		-	8	-	nC
Gate-Drain Charge	Q_{gd}		-	15	-	nC
Drain-Source Diode Characteristics						
Continuous Body Diode Current	I_S	T_C=25℃	-	-	20	A
Pulsed Diode Forward Current	I_{SM}	T_C=25℃	-	-	60	A
Diode Forward Voltage	V_{SD}	T_J=25℃, I_{SD}=20A,V_{GS}=0V	-	-	1.2	V
Reverse Recovery Time	t_{rr}	V_R=400V, I_F=I_S, di_F/dt = 100A/μs	-	423	-	ns
Reverse Recovery Charge	Q_{rr}		-	5.3	-	μC
Peak Reverse Recovery Current	I_{rrm}		-	25	-	A

Notes:

1. Repetitive Rating: Pulse width limited by maximum junction temperature.
2. I_{AS} = 3.5A, V_{DD} = 50V, R_G = 25Ω, Starting T_J = 25°C
3. Pulse Test: Pulse Width ≤ 300μs, Duty Cycle ≤ 1% .
4. Guaranteed by design, not subject to production

Typical Electrical And Thermal Characteristics

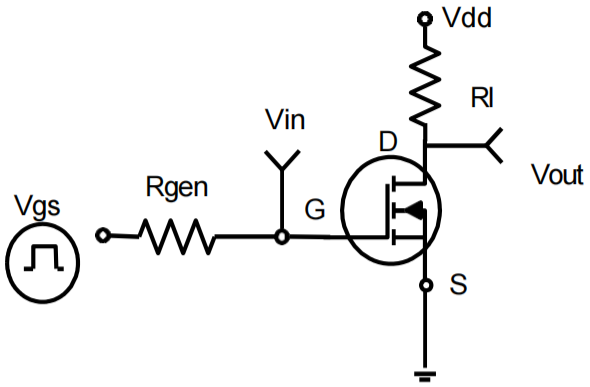

Figure 1. Switching Test Circuit

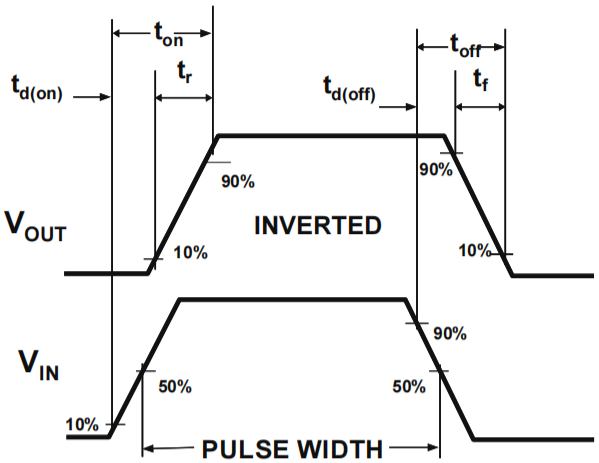

Figure 2. Switching Waveforms

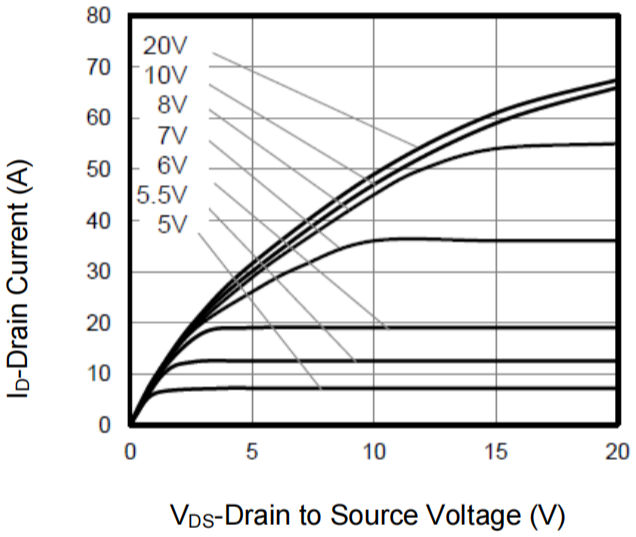

Figure 3. Output Characteristics

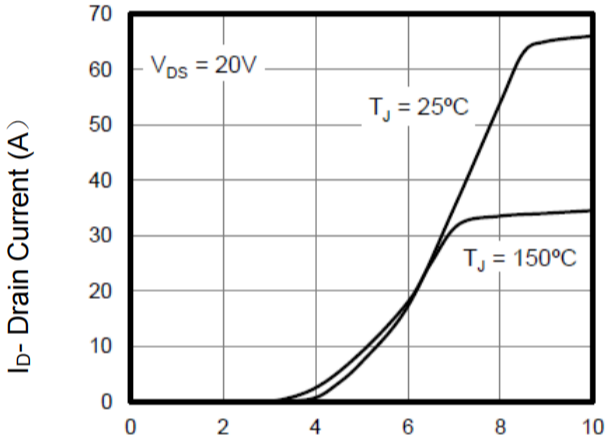

Figure 4. Transfer Charateristics

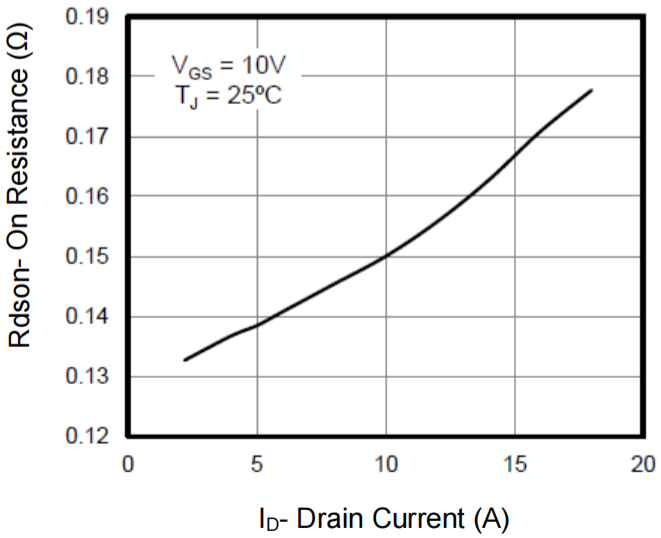

Figure 5. On Resistance vs. Drain Current

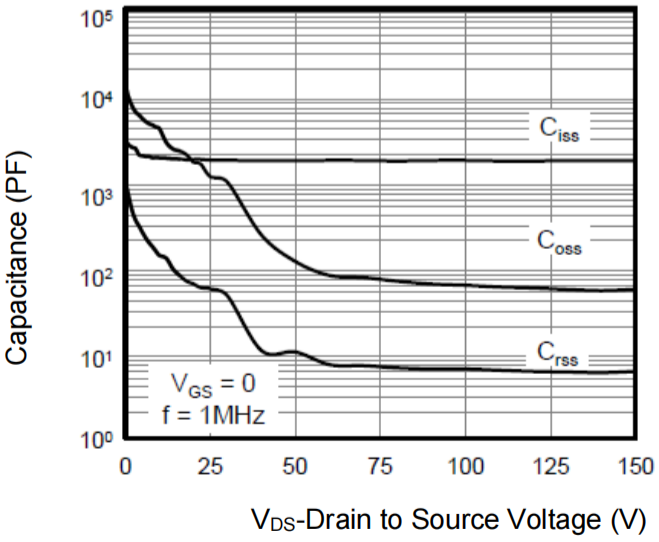

Figure 6. Capacitance

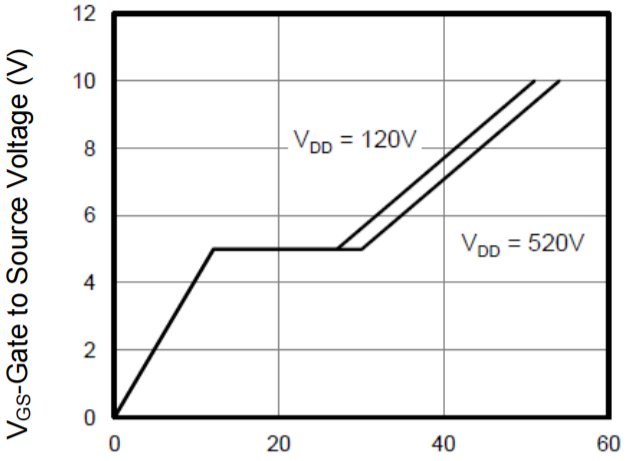

Figure 7. Gate Charge

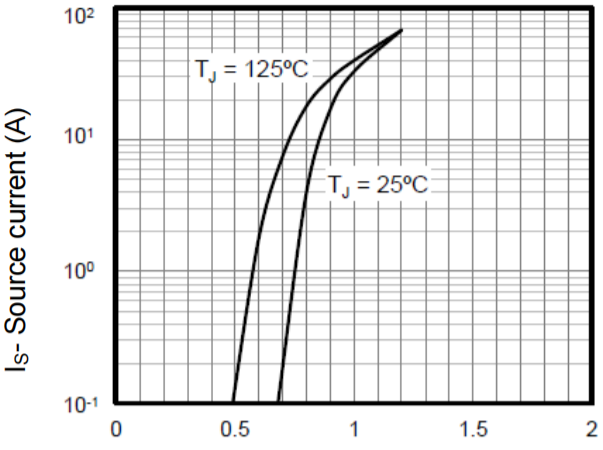

Figure 8. Body Diode Forward Voltage

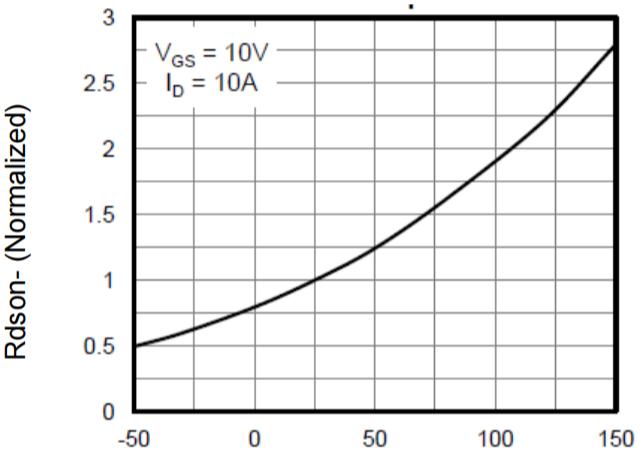

Figure 9. On- Resistance vs. Junction Temperature

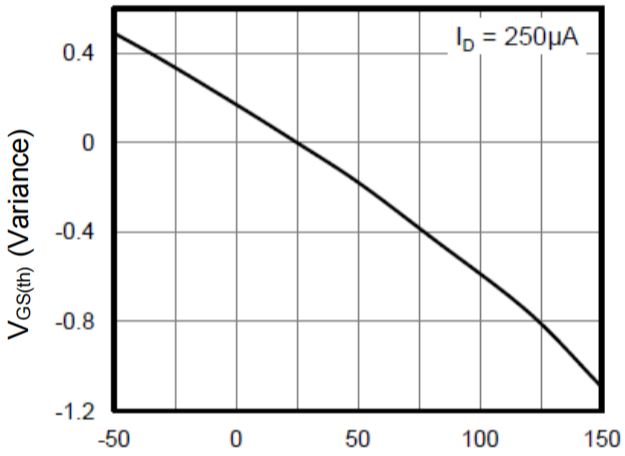

Figure 10. Threshold Voltage vs. Junction Temperature

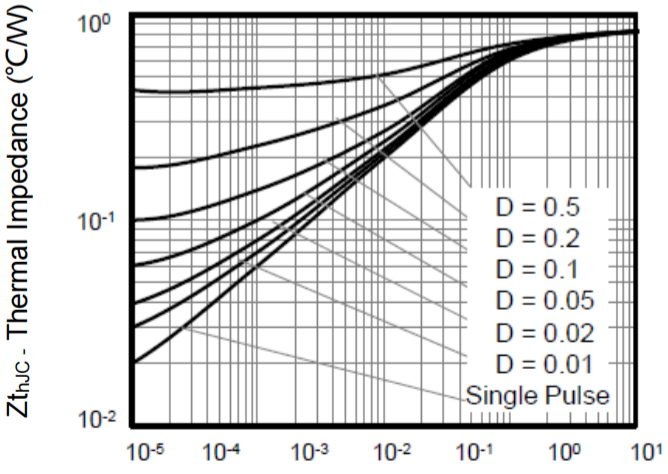

Figure 11. Transient Thermal Impedance (TO-247/TO-220)

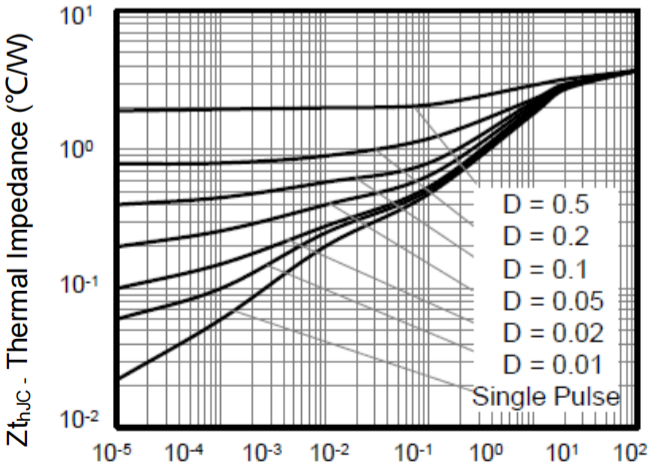

Figure 12. Transient Thermal Impedance (TO-220F)

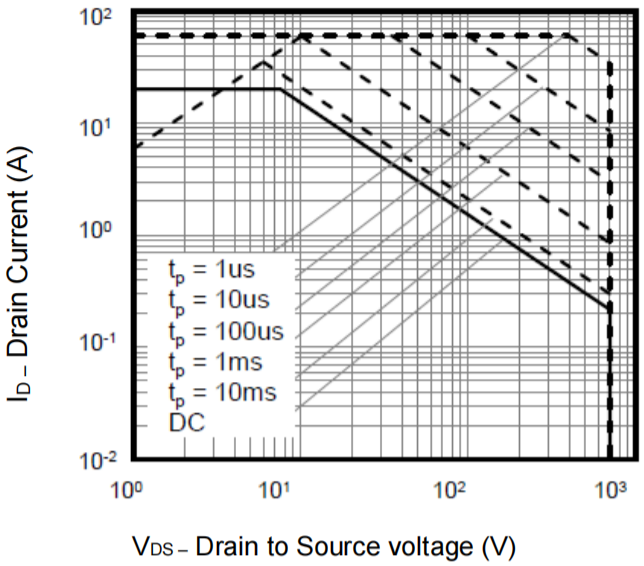

Figure 13. Safe Operation Area for TO-247/TO-220

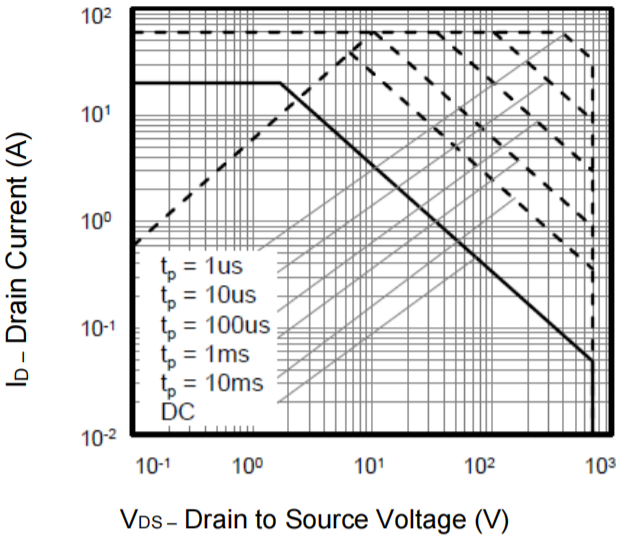

Figure 14. Safe Operation Area for TO-220F

TO-247 Package information

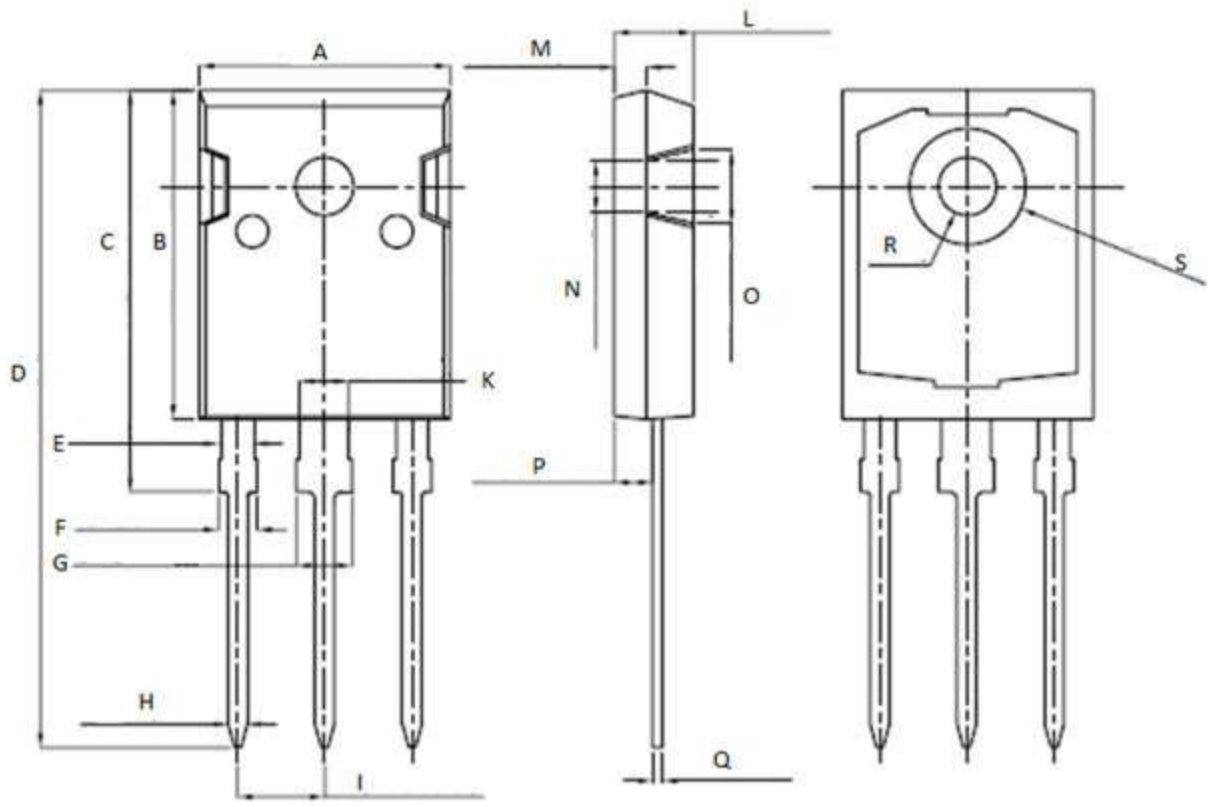

Unit: mm		
Symbol	Min.	Max.
A	15.95	16.25
B	20.85	21.25
C	20.95	21.35
D	40.5	40.9
E	1.9	2.1
F	2.1	2.25
G	3.1	3.25
H	1.1	1.3
I	5.40	5.50

Unit: mm		
Symbol	Min.	Max.
K	2.90	3.10
L	4.90	5.30
M	1.90	2.10
N	4.50	4.70
O	5.40	5.60
P	2.29	2.49
Q	0.51	0.71
R	Φ3.5	Φ3.7
S	Φ7.1	Φ7.3

TO-220 Package information

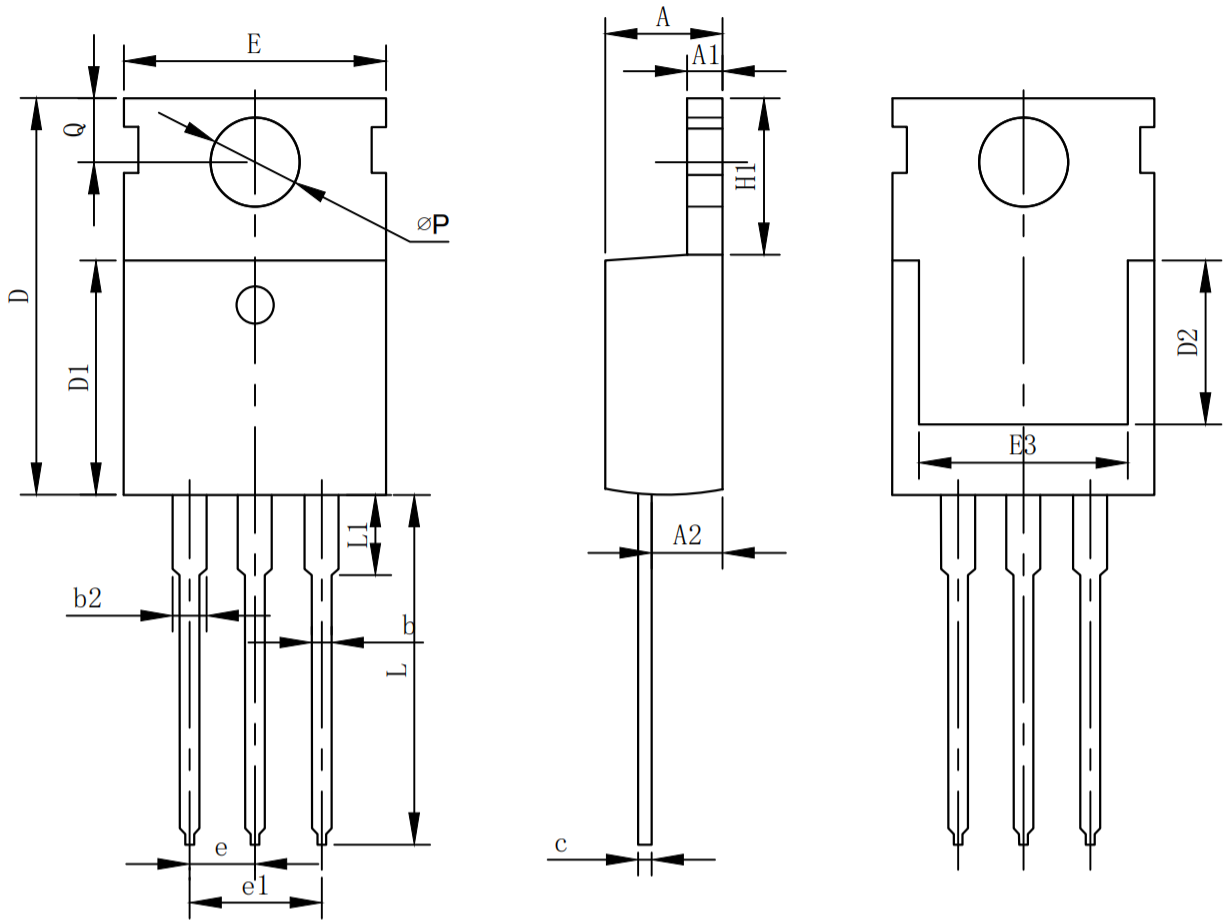

COMMONDIMENSIONS

SYMBO	mm		
	MIN	NOM	MAX
A	4.37	4.57	4.70
A1	1.25	1.30	1.40
A2	2.20	2.40	2.60
b	0.70	0.80	0.95
b2	1.70	1.27	1.47
c	0.45	0.50	0.60
D	15.10	15.60	16.10
D1	8.80	9.10	9.40
D2	5.50	-	-
E	9.70	10.00	10.30
E3	7.00	-	-
e	2.54BSC		
e1	5.08BSC		
H1	6.25	6.50	6.85
L	12.75	13.50	13.80
L1	-	3.10	3.40
ØP	3.40	3.60	3.80
Q	2.60	2.80	3.00

TO-220F Package information

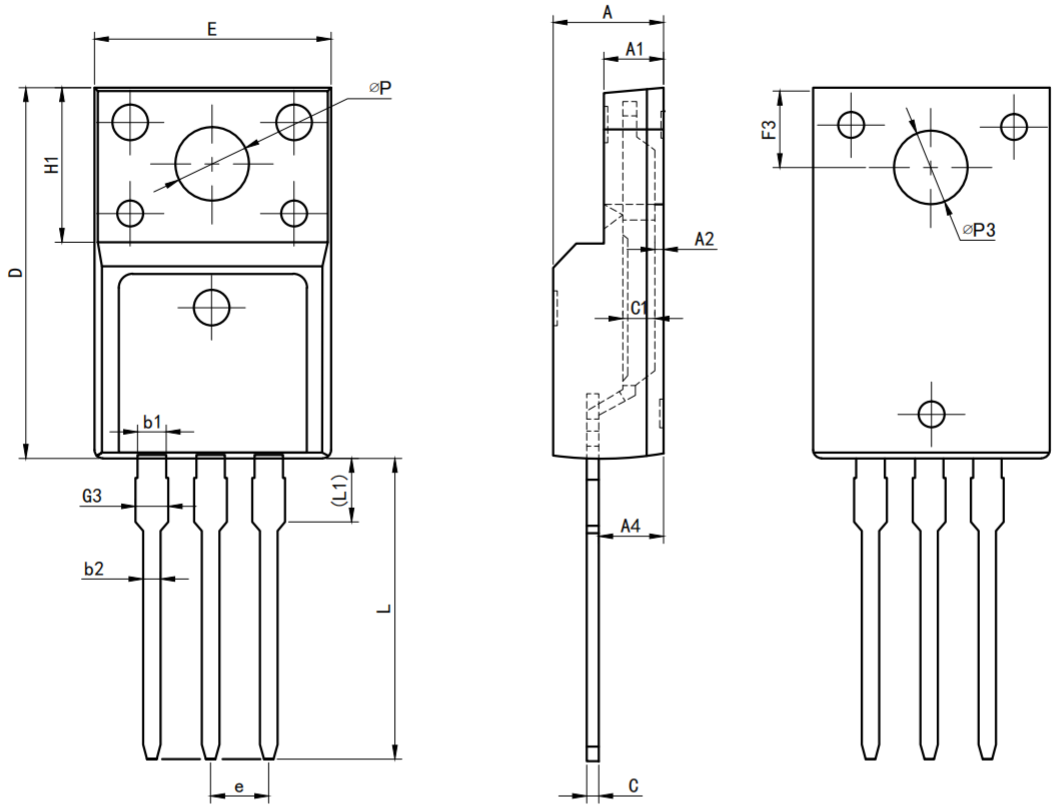

COMMOND I MENS I ONS

SYMBO	mm		
	MIN	NOM	MAX
E	9.96	10.16	10.36
A	4.50	4.70	4.90
A1	2.34	2.54	2.74
A2	0.30	0.45	0.60
A4	2.56	2.76	2.96
c	0.40	0.50	0.65
c1	1.20	1.30	1.35
D	15.57	15.87	16.17
H1	6.70REF		
e	2.54BSC		
L	12.68	12.98	13.28
L1	2.93	3.03	3.13
øP	3.03	3.18	3.38
øP3	3.15	3.45	3.65
F3	3.15	3.30	3.45
G3	1.25	1.35	1.55
b1	1.18	1.28	1.43
b2	0.70	0.80	0.95