N-Channel Silicon Carbide (SiC) MOSFET

Description

Silicon Carbide (SiC) MOSFET use a completely new technology that provide superior switching performance and higher reliability compared to Silicon. In addition, the low ON resistance and compact chip size ensure low capacitance and gate charge. Consequently, system benefits include highest efficiency, faster operating frequency, increased power density, reduced EMI, and reduced system size.

Features

- V_{DS} 1200V
- I_D (at V_{GS} = 15V) 50A
- $R_{DS(ON)}$ (at V_{GS} = 15V) = 40mΩ
- High Blocking Voltage
- High Frequency Operation
- Low on-resistance
- Fast intrinsic diode with low reverse recovery
- 100% avalanche tested

Benefits

- Higher System Efficiency
- Parallel Device Convenience without thermal runaway
- High Temperature Application
- Hard Switching & Higher Reliability
- Easy to drive

Application

- Motor Drives
- Solar Inverters
- AC/DC converters
- DC/DC converters
- Uninterruptable power supplies

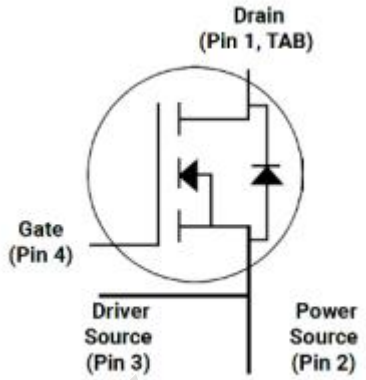

Schematic diagram

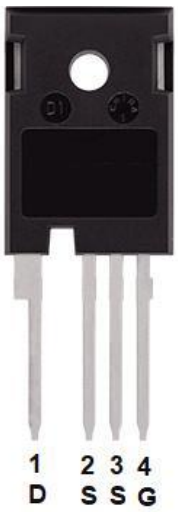

TO-247-4

PRELIMINARY

Ordering Information

Device	Package	Marking	Packaging
GS120R040Q4	TO-247-4	GS120R040	30pcs/Tube

Stresses exceeding those listed in the Maximum Ratings table may damage the device. If any of these limits are exceeded, device functionality should not be assumed, damage may occur and reliability may be affected.

Maximum Ratings (T_C=25°C unless otherwise specified)				
Parameter		**Symbol**	**Value**	**Unit**
Drain-Source Voltage		V_{DS}	1200	V
Continuous Drain Current	V_{GS} = 15V, T_C=25°C	I_D	50	A
	V_{GS} = 15V, T_C=100°C	I_D	35	A
Pulsed Drain Current		$I_{D(pulse)}$	125	A
Gate - Source Voltage (dynamic), T_{surge} <100ns		V_{GSmax}	-8 / +19	V
Gate - Source Voltage (static)		V_{GSop}	-4 / +15	V
Total power dissipation		P_D	230	W
Avalanche Energy	V_{DD} = 100V, V_{GS} = 15V, L = 2mH	E_{AS}	400	mJ
Avalanche Peak Current		I_{AV}	20	A
Operating Junction and Storage Temperature Range		T_J, T_{stg}	-55 To +175	ºC

Thermal Characteristics			
Parameter	**Symbol**	**Value**	**Unit**
Thermal Resistance, Junction-to-Ambient	R_{thJA}	40	ºC/W
Thermal Resistance, Junction-to-Case	R_{thJC}	0.48	ºC/W

PRELIMINARY

Electrical Characteristics (T_C=25°C, unless otherwise specified)

Parameter	Symbol	Test Conditions	Value			Unit
			Min.	Typ.	Max.	
Typical Performance-Static						
Drain-Source Breakdown Voltage	$V_{(BR)DSS}$	V_{GS} = 0V, I_D = 100μA	1200	--	--	V
Zero Gate Voltage Drain Current	I_{DSS}	V_{DS} = 1200V, V_{GS} = 0V	0	1	50	μA
Gate-Source Leakage Current	I_{GSS}	V_{GS} = 15V, V_{DS} = 0V	0	1	200	nA
		V_{GS} = -4V, V_{DS} = 0V	-200	-1	0	
Gate Threshold Voltage	$V_{GS(th)}$	V_{DS} = V_{GS}, I_D = 10mA	1.8	2.6	3.7	V
		V_{DS} = V_{GS}, I_D = 10mA, T_J = 150°C	--	1.9	--	
		V_{DS} = V_{GS}, I_D = 10mA, T_J = 175°C	--	1.8	--	
Drain-Source On-State Resistance	$R_{DS(on)}$	V_{GS} = 15V, I_D = 30A	--	40	53	mΩ
		V_{GS} = 15V, I_D = 30A, T_J = 150°C	--	67	--	
		V_{GS} = 15V, I_D = 30A, T_J = 175°C	--	76	--	
Transconductance	g_{fs}	V_{DS} = 20V, I_D = 30A,	--	25	--	S
		V_{DS} = 20V, I_D = 30A, T_J = 150°C	--	24	--	
		V_{DS} = 20V, I_D = 30A, T_J = 175°C	--	23	--	
Typical Performance-Dynamic						
Input capacitance	C_{iss}	V_{DS} = 1000V, V_{GS} = 0V f = 100KHz	--	2300	--	pF
Output capacitance	C_{oss}		--	96	--	
Reverse transfer capacitance	C_{rss}		--	7	--	
C_{oss} Stored Energy	E_{oss}		--	55	--	μJ
Total Gate Charge	Q_g	V_{DS} = 800V, V_{GS} = -4V/15V, I_D = 30A	--	99	--	nC
Gate-Source Charge	Q_{gs}		--	28	--	
Gate-Drain Charge	Q_{gd}		--	39	--	
Internal gate input resistance	$R_{g(int)}$	f = 1MHz, I_D = 0A	--	1	--	Ω
Turn-On Switching Energy	E_{ON}	V_{DS} = 800V, V_{GS} = -4V/15V, I_D = 30A, $R_{G(ext)}$ = 2Ω, L = 100μH	--	240	--	μJ
Turn-Off Switching Energy	E_{OFF}		--	40	--	
Turn-On Delay Time	$t_{d(on)}$		--	13	--	ns
Rise Time	t_r		--	15	--	
Turn-Off Delay Time	$t_{d(off)}$		--	26	--	
Fall Time	t_f		--	8	--	

PRELIMINARY

Reverse Diode Characteristics (T_C=25℃, unless otherwise specified)						
Parameter	**Symbol**	**Test Conditions**	**Value**			**Unit**
			Min.	**Typ.**	**Max.**	
Continuous Diode Forward Current	I_S	V_{GS} = -4V	--	--	43	A
Diode Forward Voltage	V_{SD}	V_{GS} = -4V, I_{SD} = 15A	--	4.1	--	V
		V_{GS} = -4V, I_{SD} = 15A, T_J = 150°C	--	3.7	--	
		V_{GS} = -4V, I_{SD} = 15A, T_J = 175°C	--	3.6	--	
Reverse Recovery time	t_{rr}	V_{GS} = -4V, I_{SD} = 30A, V_R= 800V, dif/dt = 4200A/μs	--	14	--	ns
Reverse Recovery Charge	Q_{rr}		--	205	--	nC
Peak Reverse Recovery Current	I_{rrm}		--	27	--	A

PRELIMINARY

Switching Times Definition and Test Circuit

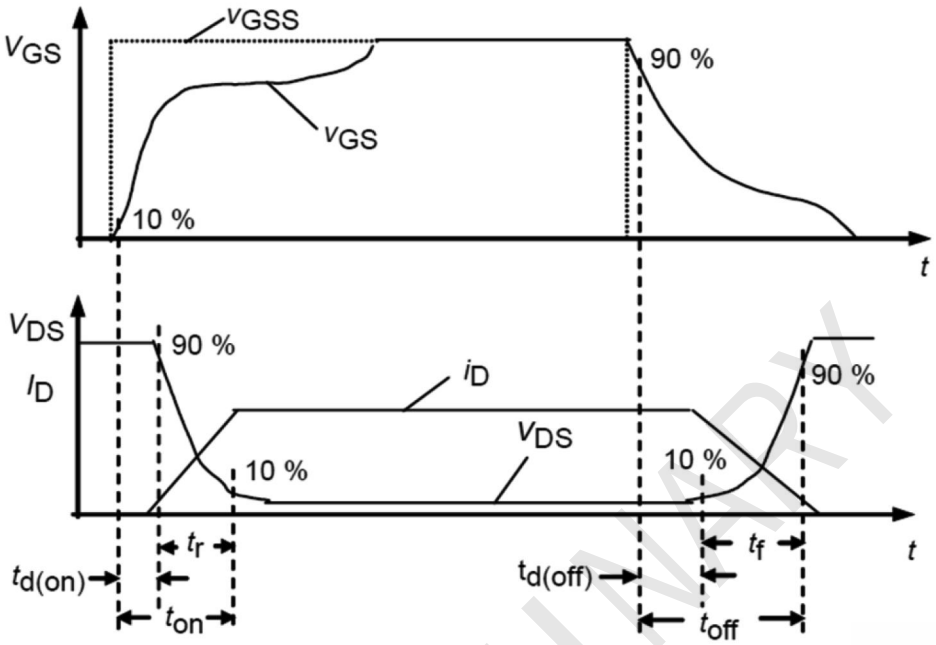

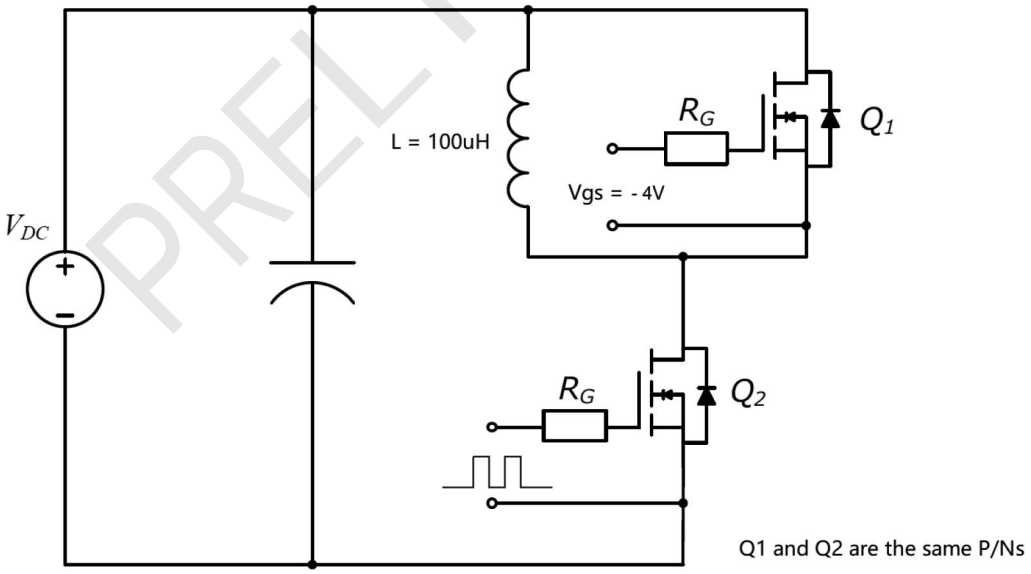

PRELIMINARY

Typical Performance

Figure 1. Output Characteristics, T_J = -55℃

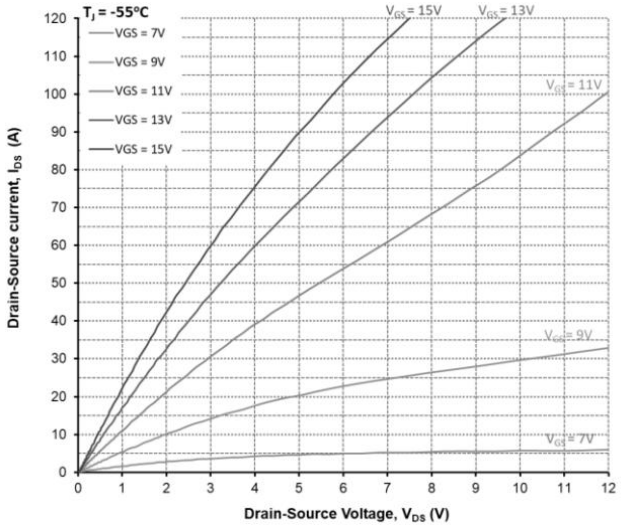

Figure 2. Output Characteristics, T_J = 25℃

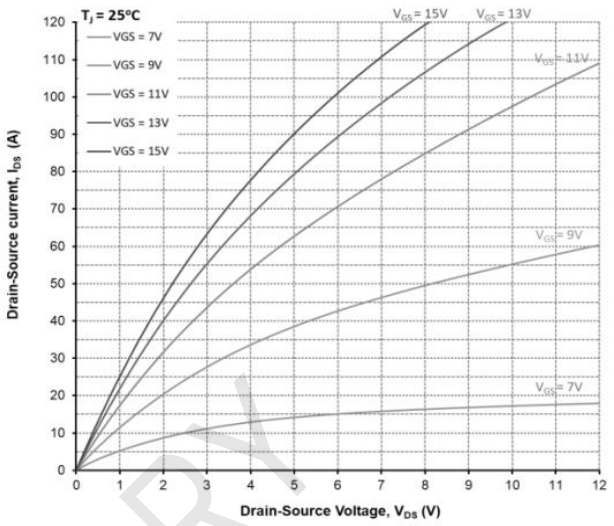

Figure 3. Output Characteristics, T_J = 175℃

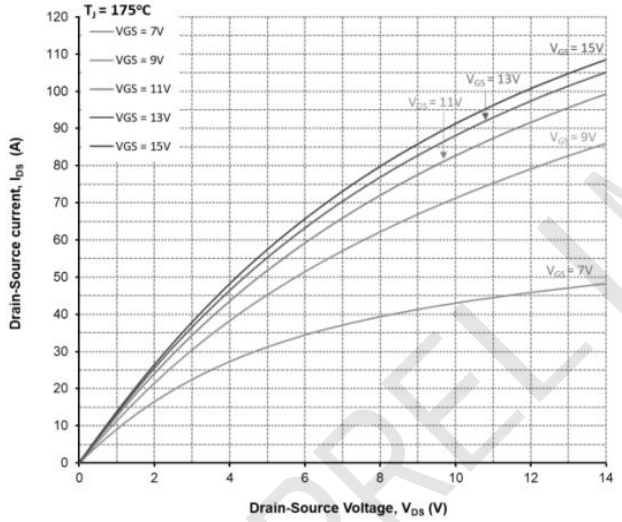

Figure 4. On-Resistance vs. Temperature

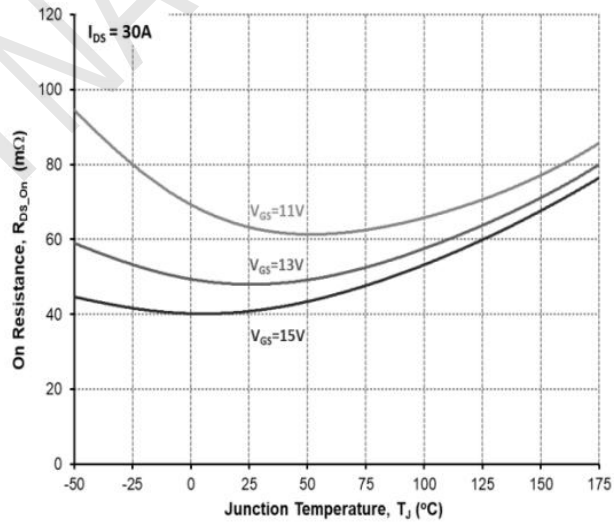

Figure 5. On-Resistance vs. Drain Current For Various Temperatures

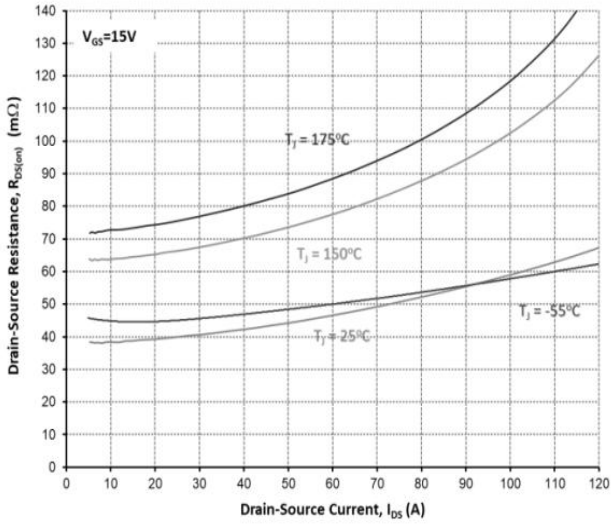

Figure 6. Transfer Characteristic For Various Junction Temperatures

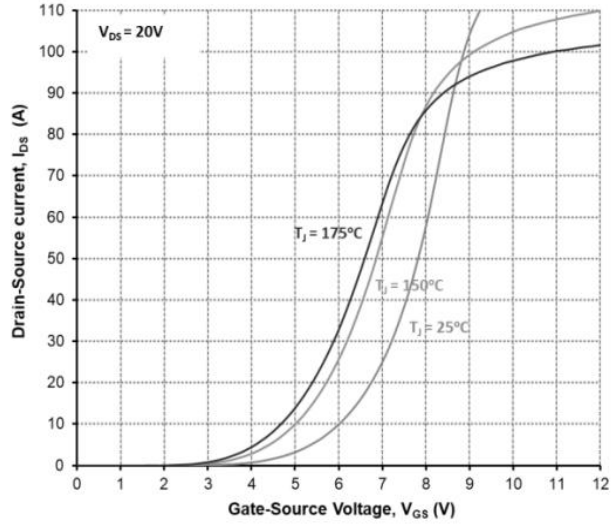

PRELIMINARY

Electrical Characteristics

Figure 7. Threshold Voltage vs. Temperature

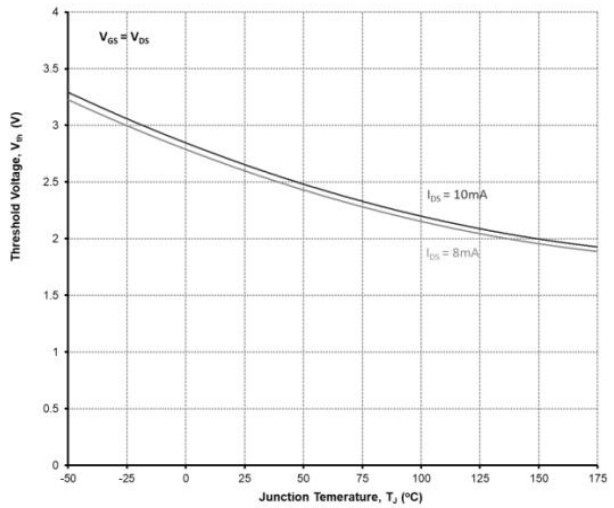

Figure 8. Body Diode Characteristics @ -55℃

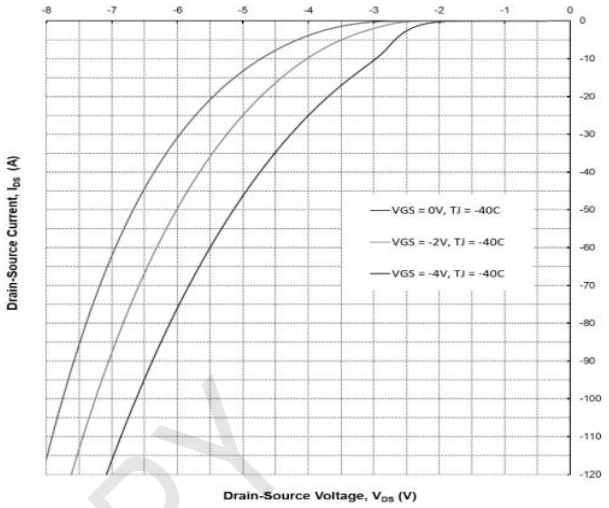

Figure 9. Body Diode Characteristics @ 25℃

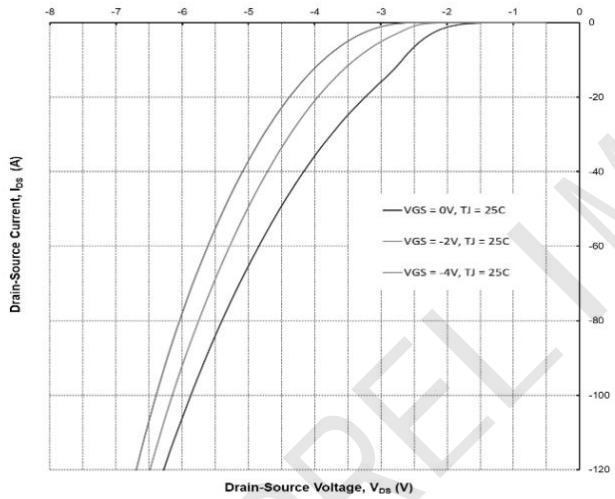

Figure 10. Body Diode Characteristics @ 175℃

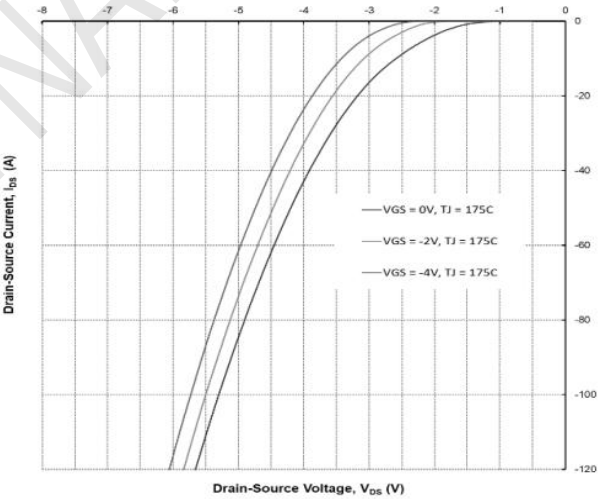

Figure 11. Gate Charge Characteristics

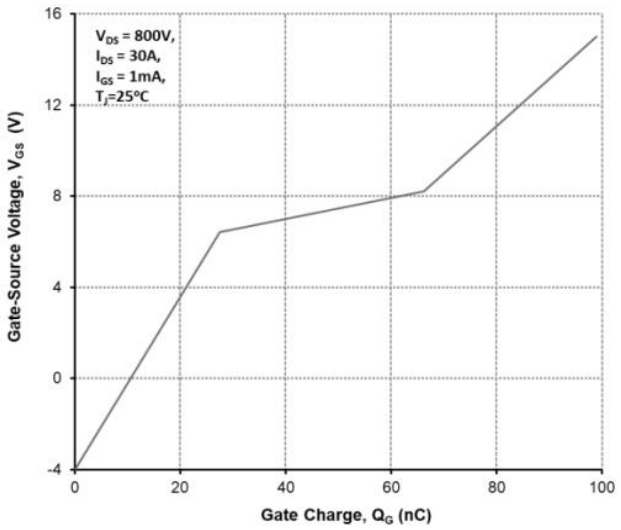

Figure 12. 3rd Quadrant Characteristics @ -55℃

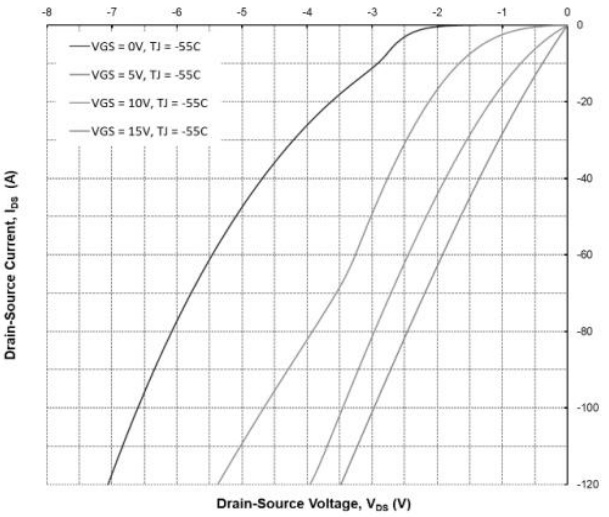

PRELIMINARY

Electrical Characteristics

Figure 13. 3rd Quadrant Characteristics @ 25℃

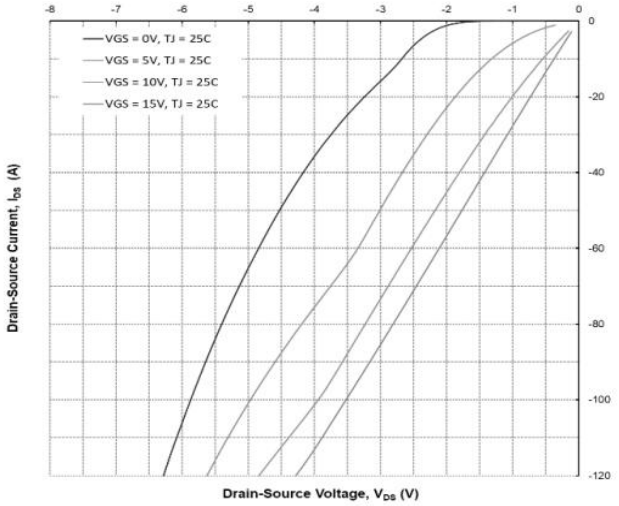

Figure 14. 3rd Quadrant Characteristics @ 175℃



Figure 15. Output Capacitor Stored Energy

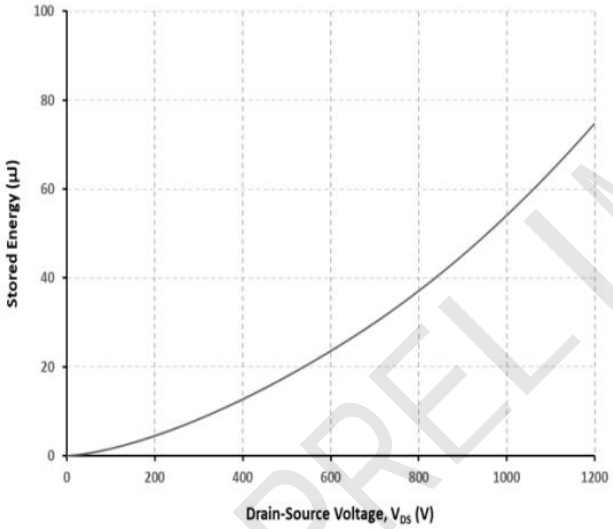

Figure 16. Capacitances vs. Drain-Source Voltage (0-200V)

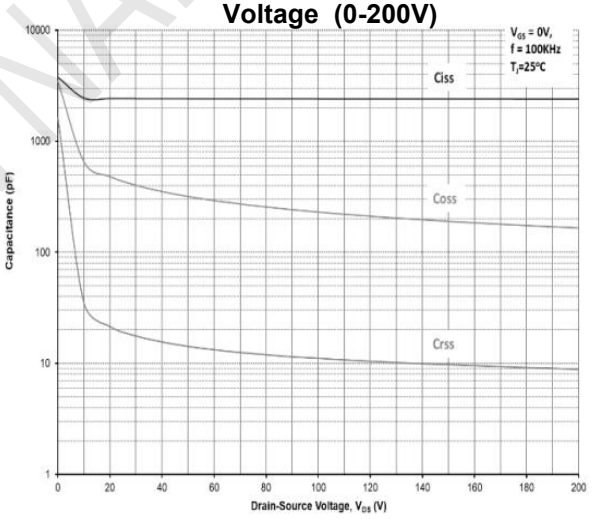

Figure 17. Capacitances vs. Drain-Source Voltage (0-1200V)

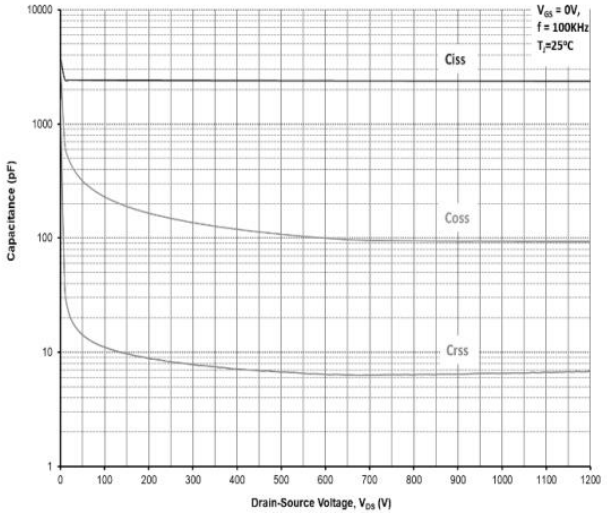

Figure 18. Continuous Drain Current Derating vs. Case Temperature

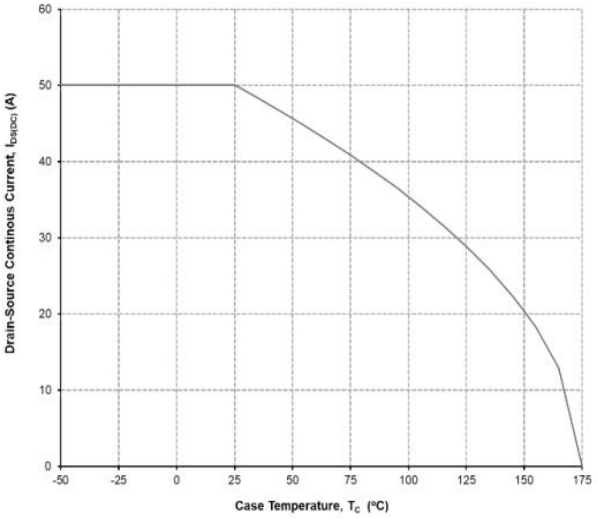

PRELIMINARY

Electrical Characteristics

Figure 19. Maximum Power Dissipation Derating vs. Case Temperature

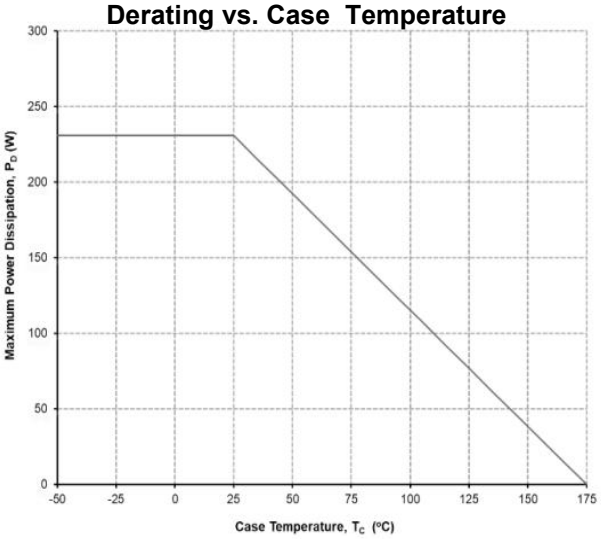

Figure 20. Transient Thermal Impedance (Junction to Case)

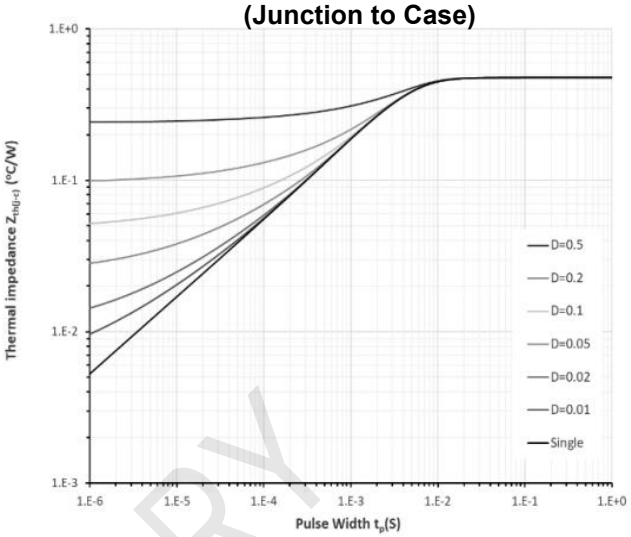

Figure 21. Safe Operating Area



Figure 22. Switching energy vs Drain current

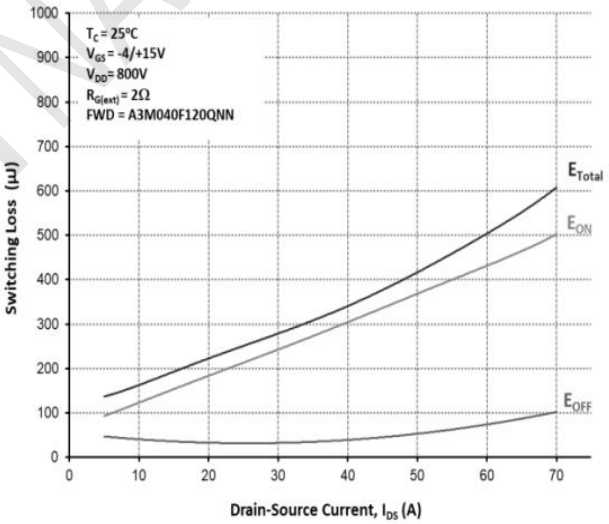

Figure 23. Switching energy vs External Gate Resistor

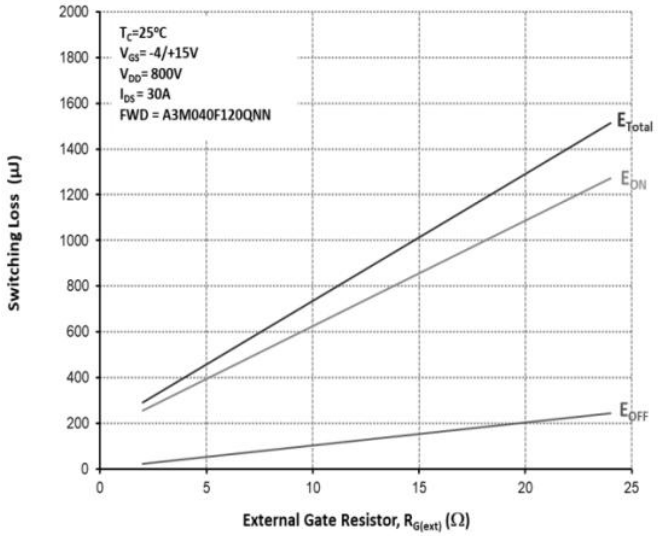

Figure 24. Normalized breakdown voltage vs Temperature

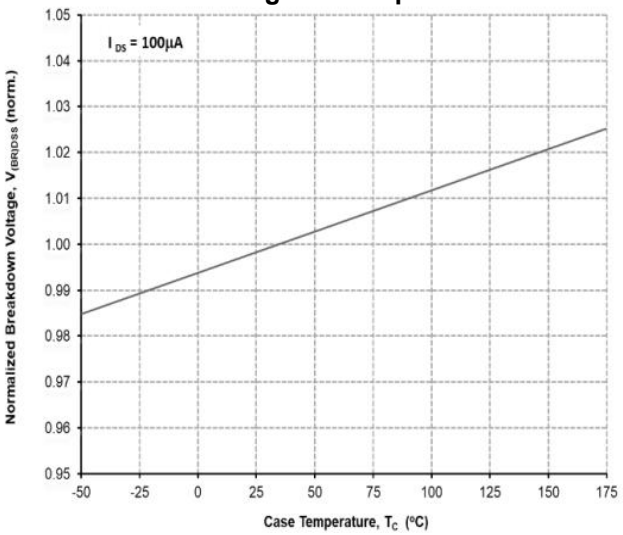

PRELIMINARY

TO-247-4 Package Information

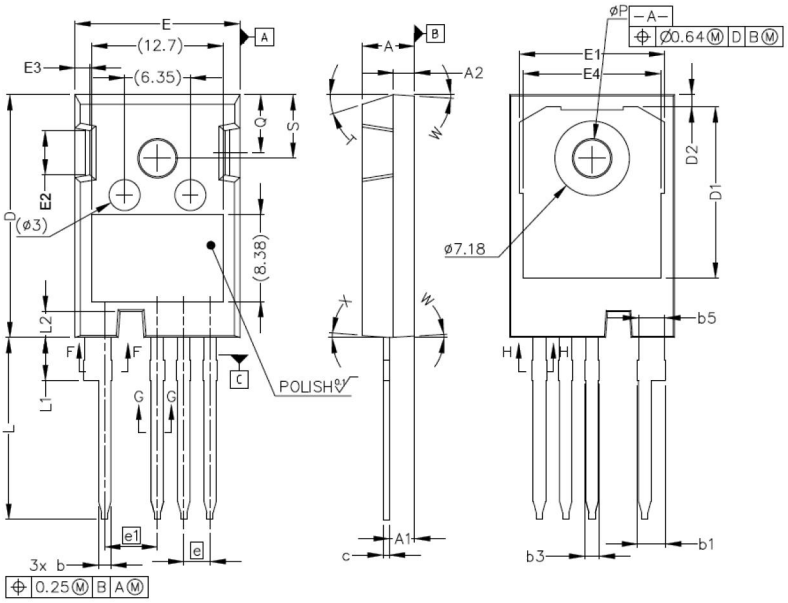

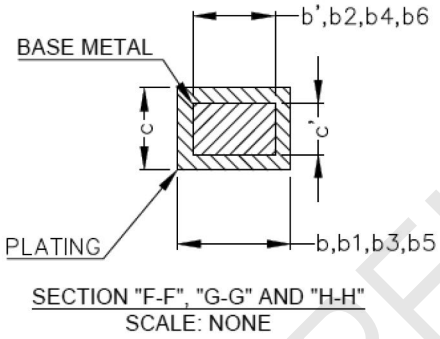

SECTION "F-F", "G-G" AND "H-H"
SCALE: NONE

SYMBOL	MILLIMETERS	
	MIN	MAX
A	4.83	5.21
A1	2.29	2.54
A2	1.91	2.16
b'	1.07	1.28
b	1.07	1.33
b1	2.39	2.94
b2	2.39	2.84
b3	1.07	1.60
b4	1.07	1.50
b5	2.39	2.69
b6	2.39	2.64
c'	0.55	0.65
c	0.55	0.68
D	23.30	23.60
D1	16.25	17.65
D2	0.95	1.25
E	15.75	16.13
E1	13.10	14.15
E2	3.68	5.10
E3	1.00	1.90
E4	12.38	13.43
e	2.54 BSC	
e1	5.08 BSC	
N	4	
L	17.31	17.82
L1	3.97	4.37
L2	2.35	2.65
øP	3.51	3.65
Q	5.49	6.00
S	6.04	6.30
T	17.5° REF.	
W	3.5 ° REF.	
X	4° REF.	

NOTE ;
1. ALL METAL SURFACES: TIN PLATED,EXCEPT AREA OF CUT
2. DIMENSIONING & TOLERANCEING CONFIRM TO ASME Y14.5M-1994.
3. ALL DIMENSIONS ARE IN MILLIMETERS. ANGLES ARE IN DEGREES.

PRELIMINARY