NOVOSENSE
纳芯微电子

NSI66x2x

High Reliability Isolated Dual-Channel Gate Driver

Datasheet (EN) 1.0

Product Overview

NSI66x2x is a family of high reliability isolated dual-channel gate driver ICs which can be configured as two low-side drivers, two high-side drivers, or a half-bridge driver. Each output could source 6A and sink 8A peak current with fast 33ns propagation delay and 6ns maximum delay matching. It is designed to drive power MOSFET, SiC, GaN, and IGBT transistors.

The NSI66x2x provides 2500Vrms isolation per UL1577 in 5-mm x 5-mm LGA13 package, 3000Vrms isolation in SOP16 or SOP14 package, and 5700Vrms isolation in SOW16 or SOW14 package. System robustness is supported by 150kV/us typical common-mode transient immunity (CMTI).

The driver operates with a maximum supply voltage of 25V, while the input-side accepts from 3V to 18V supply voltage. Under voltage lock-out (UVLO) protection is supported by all the power supply voltage pins.

Key Features

- Isolated dual channel driver
- Input side supply voltage: 3V to 18V
- Driver side supply voltage: up to 25V with UVLO
- 6A peak source and 8A peak sink output
- High CMTI: ±150kV/us typical
- 33ns typical propagation delay
- 6ns maximum delay matching
- 8ns maximum pulse width distortion
- Programmable deadtime
- Accepts minimum input pulse width 20ns
- Operation temperature: -40℃~125℃
- RoHS & REACH Compliance

Safety Regulatory Approvals

- UL recognition:
  - LGA13 (5x5mm): 2500V_{rms} for 1 minute per UL1577
  - SOW16/SOW14: 5700V_{rms} for 1 minute per UL1577
  - SOP16/SOP14: 3000V_{rms} for 1 minute per UL1577
- DIN EN IEC 60747-17 (VDE 0884-17)
- CSA component notice 5A
- CQC certification per GB4943.

Applications

- Isolated DC-DC and AC-to-DC power supplies in server, telecom, and industry
- DC-to-AC solar inverters
- Motor drives and EV battery chargers
- Uninterruptible power supply (UPS)

Copyright © 2023, NOVOSENSE

Functional Block Diagram

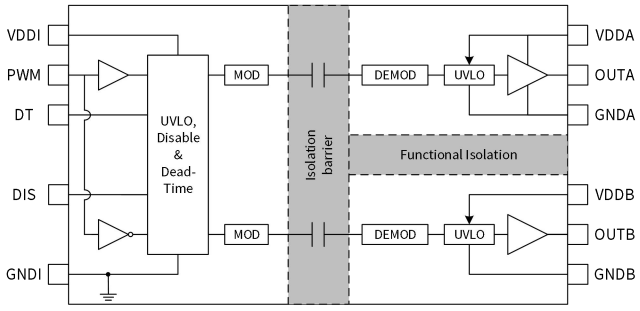

Figure 0.1 NSI6642 Block Diagram

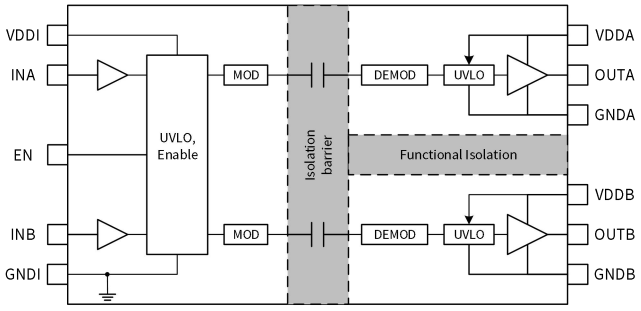

Figure 0.2 NSI6622N Block Diagram

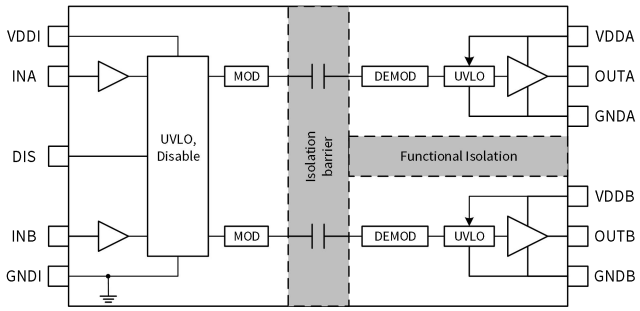

Figure 0.3 NSI6622V Block Diagram

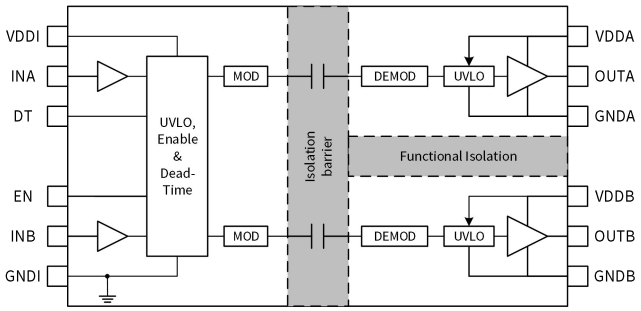

Figure 0.4 NSI6602N Block Diagram

Products

The table below shows the configuration and functional overview for each product in this family.

Table 0.1 NSI66x2x Family Overview

Part No.	*Driver-side UVLO TYP.*	*Inputs*	Programmable Dead Time	*Enable pin*	*Peak current*
NSI6602NA	6V	INA, INB	YES	EN	6A/8A
NSI6602NB	8V	INA, INB	YES	EN	6A/8A
NSI6602NC	12V	INA, INB	YES	EN	6A/8A
NSI6602ND	4V	INA, INB	YES	EN	6A/8A
NSI6642A	6V	PWM	YES	DIS	6A/8A
NSI6642B	8V	PWM	YES	DIS	6A/8A
NSI6642C	12V	PWM	YES	DIS	6A/8A
NSI6642D	4V	PWM	YES	DIS	6A/8A
NSI6622NA	6V	INA, INB	NO	EN	6A/8A
NSI6622NB	8V	INA, INB	NO	EN	6A/8A
NSI6622NC	12V	INA, INB	NO	EN	6A/8A
NSI6622ND	4V	INA, INB	NO	EN	6A/8A
NSI6622VA	6V	INA, INB	NO	DIS	6A/8A
NSI6622VB	8V	INA, INB	NO	DIS	6A/8A
NSI6622VC	12V	INA, INB	NO	DIS	6A/8A
NSI6622VD	4V	INA, INB	NO	DIS	6A/8A

Copyright © 2023, NOVOSENSE

INDEX

1. PIN CONFIGURATION AND FUNCTIONS 4

2. ABSOLUTE MAXIMUM RATINGS 6

3. ESD RATINGS 6

4. RECOMMENDED OPERATING CONDITIONS 6

5. THERMAL INFORMATION 7

6. SPECIFICATIONS 8

6.1. Electrical Characteristics 8
6.2. Switching Characteristics 9
6.3. Typical Performance Characteristics 9
6.4. Parameter Measurement Information 13

7. HIGH VOLTAGE FEATURE DESCRIPTION 15

7.1. Insulation Characteristics 15
7.2. Safety-Limiting Values 17
7.3. Safety-Related Certifications 20

8. FUNCTION DESCRIPTION 21

8.1. Overview 21
8.2. Undervoltage Lockout (UVLO) 22
8.3. Input and Output Logic Table 23
8.4. Programmable Deadtime (DT pin) 24
8.4.1. Pulling the DT Pin to VDDI 24
8.4.2. DT Pin Left Open or Connected to a Programming Resistor between DT and GNDI Pins 24
8.5. ESD Protection 26

9. APPLICATION NOTE 26

9.1. Typical Application Circuit 26
9.2. PCB Layout 26

10. PACKAGE INFORMATION 27

11. ORDERING INFORMATION 33

12. TAPE AND REEL INFORMATION 36

13. REVISION HISTORY 38

Copyright © 2023, NOVOSENSE

1. Pin Configuration and Functions

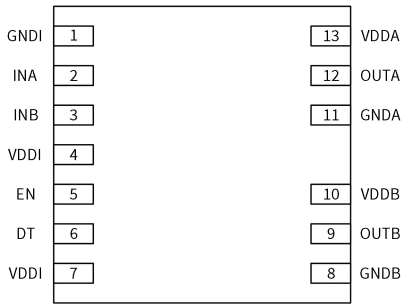

Figure 1.1 NSI6602N LGA13 Package

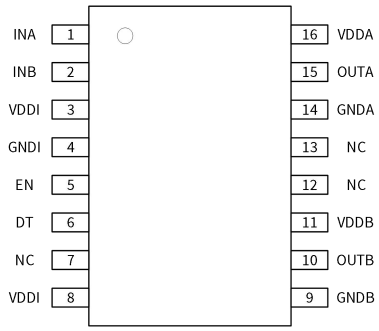

Figure 1.2 NSI6602N SOW16/ SOP16 Package

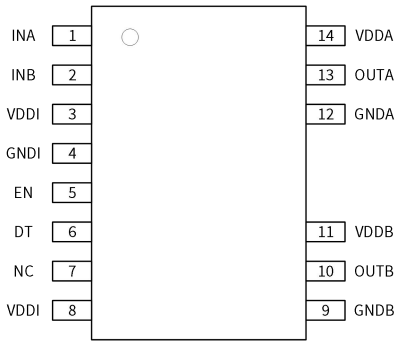

Figure 1.3 NSI6602N SOW14/ SOP14 Package

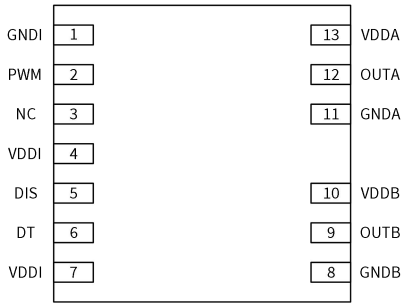

Figure 1.4 NSI6642 LGA13 Package

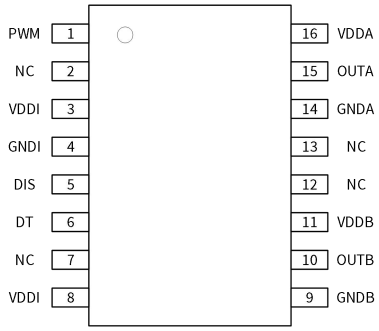

Figure 1.5 NSI6642 SOW16/ SOP16 Package

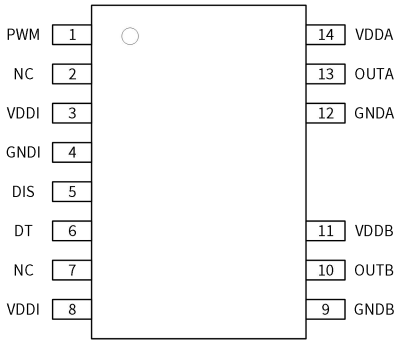

Figure 1.6 NSI6642 SOW14 / SOP14 Package

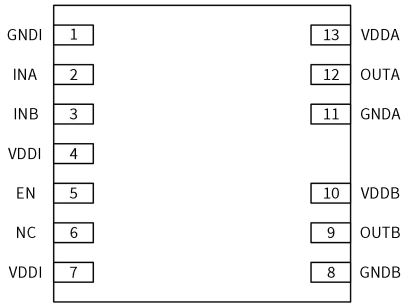

Figure 1.7 NSI6622N LGA13 Package

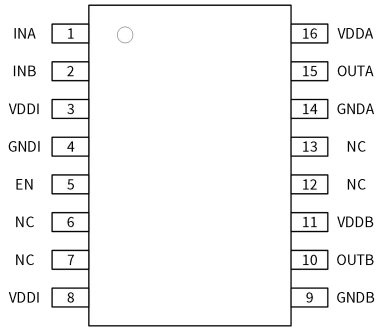

Figure 1.8 NSI6622N SOW16/ SOP16 Package

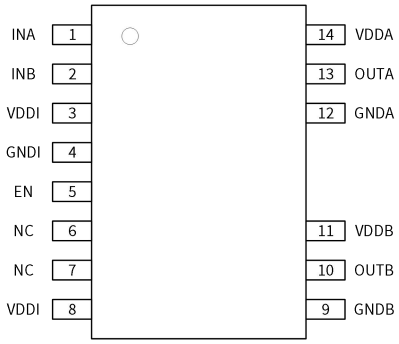

Figure 1.9 NSI6622N SOW14/ SOP14 Package

Copyright © 2023, NOVOSENSE

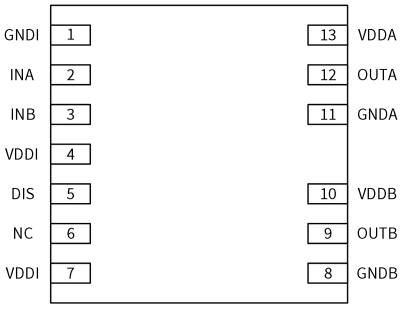

Figure 1.10 NSI6622V LGA13 Package

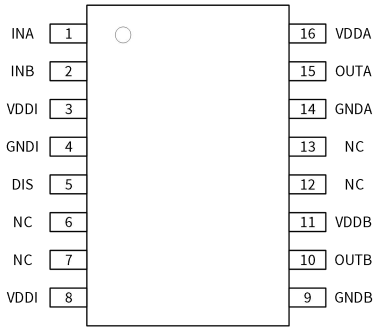

Figure 1.11 NSI6622V SOW16/ SOP16 Package

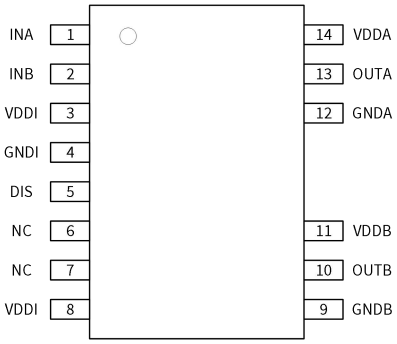

Figure 1.12 NSI6622V SOW14/ SOP14 Package

Table 1.1 NSI66x2x Pin Description

SYMBOL	*FUNCTION*
GNDI	Input-side ground reference.
INA	TTL compatible input signal for channel A with internal pull down to GNDI. It is recommended to connect this pin to GNDI if not used.
INB	TTL compatible input signal for channel B with internal pull down to GNDI. It is recommended to connect this pin to GNDI if not used.
PWM	TTL compatible input signal for channel A and channel B with internal pull down to GNDI. OUTA is high and OUTB is low when the PWM input is high, and OUTA is low and OUTB is high when the PWM input is low. (for NSI6642)
VDDI	Input-side supply voltage. It is recommended to place a bypass capacitor from this pin to GNDI as close as possible.
DIS	Disables the isolator inputs and driver outputs if asserted high, enables if asserted low or left open. It is recommended to connect this pin to GNDI if not used.
EN	Enable the isolator inputs and driver outputs if asserted high, disable if asserted low or left open. It is recommended to connect this pin to VDDI if not used.
DT	Programmable deadtime control. To allow the outputs overlapping by connecting DT to VDDI. Place a 1kΩ to 200kΩ resistor (RDT) between DT and GND to adjust deadtime following: tDT (ns) = 10 x RDT (kΩ). It is recommended to parallel a low ESR capacitor, e.g., 2.2nF or above.
GNDB	Ground for output channel B
OUTB	Output gate driver for channel B
VDDB	Supply voltage for channel B
GNDA	Ground for output channel A
OUTA	Output gate driver for channel A

Copyright © 2023, NOVOSENSE

VDDA	Supply voltage for channel A
NC	Not connected

2. Absolute Maximum Ratings

Parameters	*Symbol*	*Min*	*Max*	*Unit*
Input Side Supply Voltage	VDDI to GNDI	-0.3	24	V
Output Side Supply Voltage	VDDA to GNDA, VDDB to GNDB	-0.3	30	V
Input Signal Voltage	INA, INB, DIS/EN, DT to GNDI	-0.3	V_{VDDI}+0.3	V
	INA, INB, DIS/EN, DT to GNDI, Transient for 50ns	-5	V_{VDDI}+0.3	V
Output Signal Voltage	OUTA to GNDA, OUTB to GNDB	-0.3	V_{VDDA}+0.3 V_{VDDB}+0.3	V
	OUTA to GNDA, OUTB to GNDB, Transient for 200ns	-2	V_{VDDA}+0.3 V_{VDDB}+0.3	V
Channel A to Channel B Voltage	GNDA to GNDB in LGA13 (5 x 5) package		700	V
	GNDA to GNDB in SOP16&SOW16 package		1500	V
	GNDA to GNDB in SOW14 & SOP14 package		1850	V
Junction Temperature	T_J	-40	150	°C
Storage Temperature	T_{stg}	-65	150	°C

3. ESD Ratings

	Ratings	*Value*	*Unit*
Electrostatic discharge	Human body model (HBM), per AEC-Q100-002-RevD ● All pins	±3000	V
	Charged device model (CDM), per AEC-Q100-011-RevB ● All pins	±1500	V

4. Recommended Operating Conditions

Parameters	*Symbol*	*Min*	*Max*	*Unit*
Input Side Supply Voltage	VDDI to GNDI	3	18	V
Driver Side Supply Voltage	VDDA to GNDA, VDDB to GNDB	V_{VDDA_ON}, V_{VDDB_ON}	25	V
Input Signal Voltage	INA/PWM, INB, DIS/EN, DT	0	V_{VDDI}	V

Copyright © 2023, NOVOSENSE

Ambient Temperature	T_a	-40	125	°C

5. Thermal Information

Parameters	*Symbol*	*LGA13*	*SOW16/ SOW14*	*SOP16/ SOP14*	*Unit*
Junction-to-ambient thermal resistance[1)]	R_{JA}	209.5	97.0	150.5	°C/W
Junction-to-case(top) thermal resistance[2)]	$R_{JC(top)}$	48.4	23.3	21.2	°C/W
Junction-to-top characterization parameter[3)]	Ψ_{JT}	41.8	35.8	52.3	°C/W
Junction-to-board characterization parameter[3)]	Ψ_{JB}	31.9	39.0	55.6	°C/W

1) Standard JESD51-3 Low Effective Thermal Conductivity Test Board (1s) in an environment described in JESD51-2a.

2) Standard JESD51-3 Low Effective Thermal Conductivity Test Board (1s) by transient dual interface test method described in JESD51-14.

3) Obtained by Simulating in an environment described in JESD51-2a.

Copyright © 2023, NOVOSENSE

6. Specifications

6.1. Electrical Characteristics

VDDI=3.3V or 5V, VDDA=VDDB=15V, Ta=-40℃ to 125℃. Unless otherwise noted, Typical values are at Ta=25℃.

Parameter	*Symbol*	*Min*	*Typ*	*Max*	*Unit*	*Comments*
Input Side Supply						
VDDI Quiescent Current	I_{VDDIQ}		1.0	2	mA	INA=0, INB=0
VDDI Operating Current, per Channel	I_{VDDI}		1.6		mA	Input frequency 500kHz
VDDI UVLO Rising Threshold	V_{VDDI_ON}	2.5	2.7	2.9	V	
VDDI UVLO Falling Threshold	V_{VDDI_OFF}	2.3	2.5	2.7	V	
VDDI UVLO Hysteresis	V_{VDDI_HYS}		0.2		V	
Output Side Supply						
VDDA/B Quiescent Current, per Channel	I_{VDDAQ}, I_{VDDBQ}		1.0	2	mA	INA=0, INB=0
VDDA/B Operation Current, per Channel	I_{VDDA}, I_{VDDB}		3.0		mA	100pF, 500kHz, VDDx=15V
VDDA/B UVLO Rising Threshold	V_{VDDA_ON}, V_{VDDB_ON}	5.7	6.15	6.5	V	NSI66x2xA (6V)
VDDA/B UVLO Falling Threshold	V_{VDDA_OFF}, V_{VDDB_OFF}	5.4	5.85	6.2	V	
VDDA/B UVLO Hysteresis	V_{VDDA_HYS}, V_{VDDB_HYS}		0.3		V	
VDDA/B UVLO Rising Threshold	V_{VDDA_ON}, V_{VDDB_ON}	8.1	8.5	8.9	V	NSI66x2xB (8V)
VDDA/B UVLO Falling Threshold	V_{VDDA_OFF}, V_{VDDB_OFF}	7.6	8.0	8.4	V	
VDDA/B UVLO Hysteresis	V_{VDDA_HYS}, V_{VDDB_HYS}		0.5		V	
VDDA/B UVLO Rising Threshold	V_{VDDA_ON}, V_{VDDB_ON}	12.7	13.2	13.7	V	NSI66x2xC (12V)
VDDA/B UVLO Falling Threshold	V_{VDDA_OFF}, V_{VDDB_OFF}	11.7	12.2	12.7	V	
VDDA/B UVLO Hysteresis	V_{VDDA_HYS}, V_{VDDB_HYS}		1		V	
VDDA/B UVLO Rising Threshold	V_{VDDA_ON}, V_{VDDB_ON}	3.9	4.2	4.4	V	NSI66x2xD (4V)
VDDA/B UVLO Falling Threshold	V_{VDDA_OFF}, V_{VDDB_OFF}	3.5	3.8	4.1	V	
VDDA/B UVLO Hysteresis	V_{VDDA_HYS}, V_{VDDB_HYS}		0.4		V	
Input Side Characteristic						
Input Pin Pull Down Resistance, INA, INB	R_{INA_PD}/R_{PWM_PD}, R_{INB_PD}	80	100	125	kΩ	
Input Pin Pull Down Resistance, DIS /EN	R_{DIS_PD} /R_{EN_PD}	80	100	125	kΩ	
Logic High Input Threshold	V_{INA_H} /V_{PWM_H}, V_{INB_H}, V_{DIS_H} /V_{EN_H}	1.5	1.8	2.1	V	
Logic Low Input Threshold	V_{INA_L} /V_{PWM_L}, V_{INB_L}, V_{DIS_L} /V_{EN_L}	0.8	1.1	1.4	V	

Copyright © 2023, NOVOSENSE

Parameter	Symbol	Min	Typ	Max	Unit	Comments
Input Hysteresis	V_{INA_HYS} /V_{PWM_HYS}, V_{INB_HYS}, V_{DIS_HYS} /V_{EN_HYS}		0.7		V	
Output Side Characteristic						
Logic High Output Voltage	V_{VDDA}-V_{OUTA_H}, V_{VDDB}-V_{OUTB_H}		0.1		V	I_{out} = 100mA
Logic Low Output Voltage	V_{OUTA_L}, V_{OUTB_L}		35		mV	I_{out} = -100mA
Output Source Resistance	R_{OUTA_H}, R_{OUTB_H}		1		Ω	I_{out} = 100mA
Output Sink Resistance	R_{OUTA_L}, R_{OUTB_L}		0.35		Ω	I_{out} = -100mA
Peak Output Source Current	I_{OUTA+}, I_{OUTB+}		6		A	
Peak Output Sink Current	I_{OUTA-}, I_{OUTB-}		8		A	

6.2. Switching Characteristics

VDDI=3.3V or 5V, VDDA=VDDB=15V, Ta=-40℃ to 125℃. Unless otherwise noted, Typical values are at Ta=25℃.

Parameter	Symbol	Min	Typ	Max	Unit	Comments
Minimum Pulse Width	t_{PWmin}		15	25	ns	
Propagation Delay	t_{PDHL}, t_{PDLH}		33	45	ns	
Pulse Width Distortion $\lvert t_{PDLH}-t_{PDHL}\rvert$	t_{PWD}			9	ns	
Channel to Channel Delay Matching	t_{DMLH}, t_{DMHL}			6	ns	
Programmed Deadtime	t_{DT}	160	200	240	ns	t_{DT}(ns)=10*R(kΩ); Test for R = 20kΩ
Output Rise Time (10% to 90%)	t_R		15		ns	CL=1.8nF，VDDx=15V
Output Fall Time (90% to 10%)	t_F		15		ns	CL=1.8nF，VDDx=15V
Shutdown Time from Disable True	t_{DIS}		50	80	ns	
Recovery Time from Disable False	t_{EN}		50	80	ns	
VDDI Power-up Time Delay (Time from VDDI = V_{VDDI_ON} to OUTA/B = INA/B)	t_{start_VDDI}		12		us	INA or INB tied to VDDI
VDDA/B Power-up Time Delay (Time from VDDA/B = V_{VDD_ON} to OUTA/B = INA/B)	t_{start_VDDA}, t_{start_VDDB}		18		us	INA or INB tied to VDDI $C_{OUTA/B}$=1.8nF
Common Mode Transient Immunity	CMTI	100	150		kV/us	verified by design

6.3. Typical Performance Characteristics

VDDI=3.3V or 5V, VDDA=VDDB=15V, TA = 25°C. Output has no load unless otherwise noted.

Copyright © 2023, NOVOSENSE

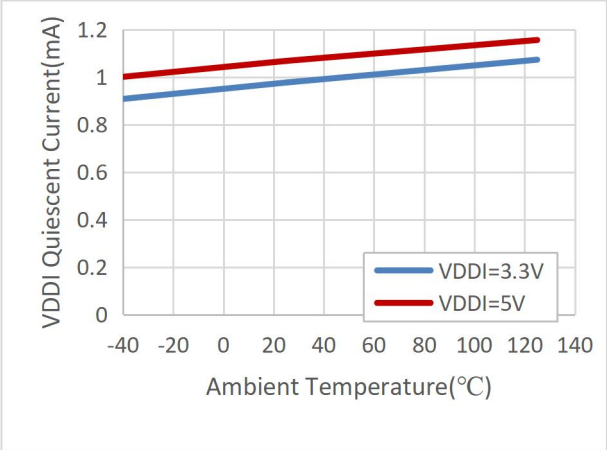

Figure 6.1 VDDI Quiescent Current vs Temperature

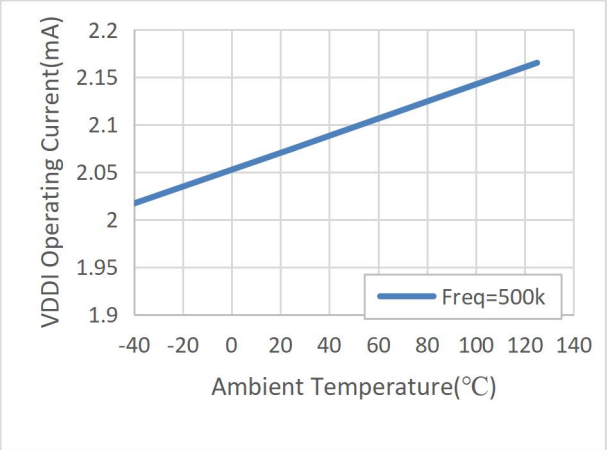

Figure 6.2 VDDI Operating Current vs Temperature

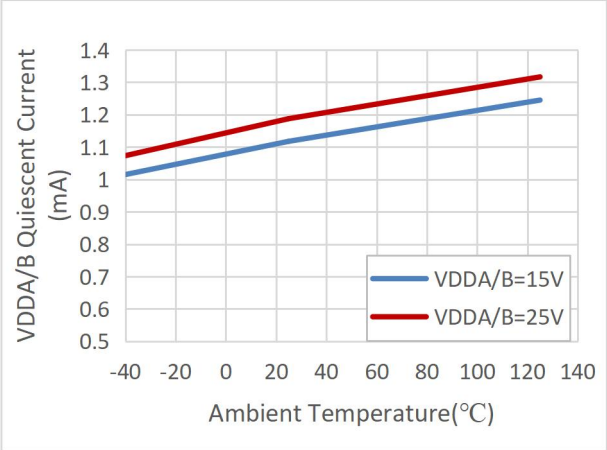

Figure 6.3 VDDA/B Quiescent Current vs Temperature

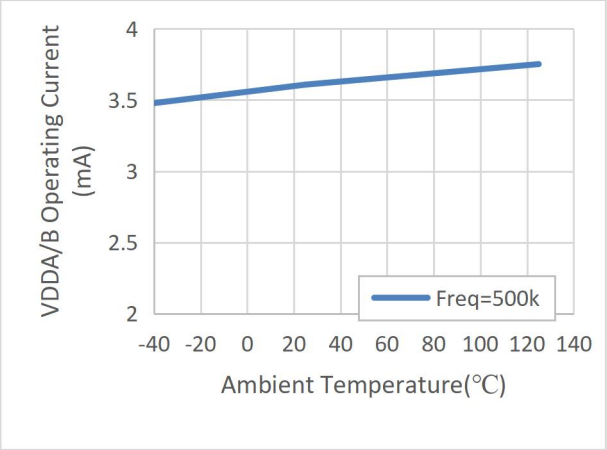

Figure 6.4 VDDA/B Operating Current vs Temperature

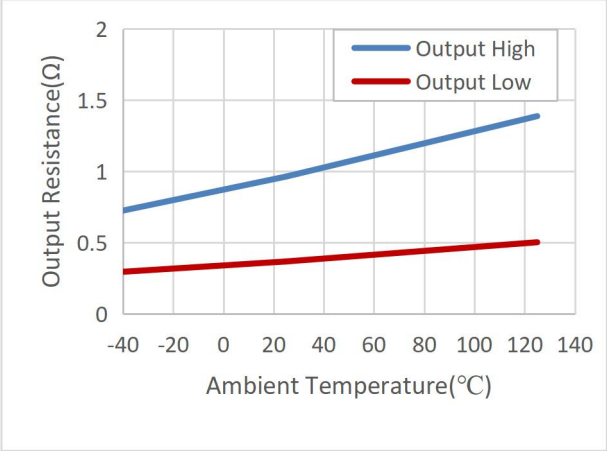

Figure 6.5 Output Resistance vs Temperature

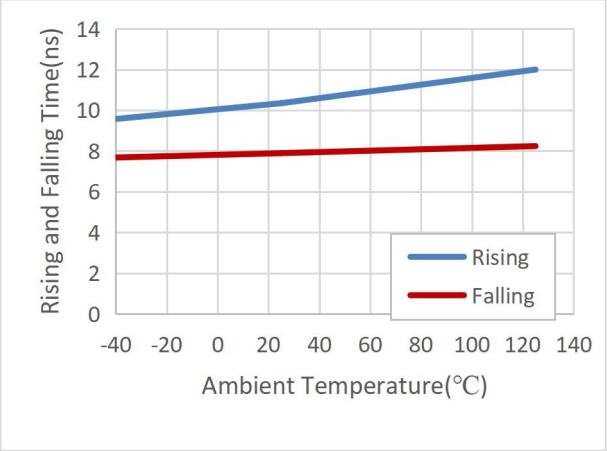

Figure 6.6 Typical Rise Time & Fall Time vs Temperature

Copyright © 2023, NOVOSENSE

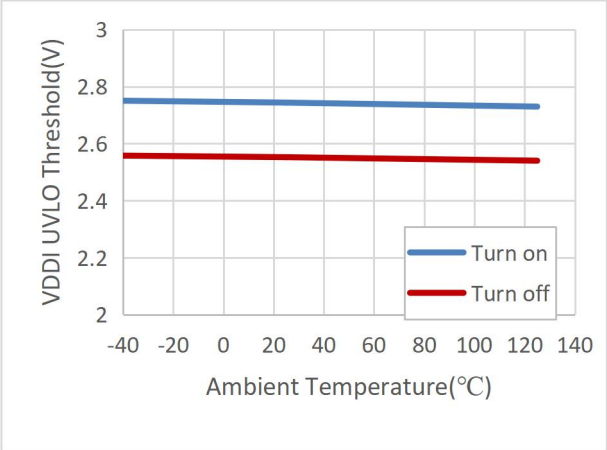

Figure 6.7 VDDI UVLO Threshold vs Temperature

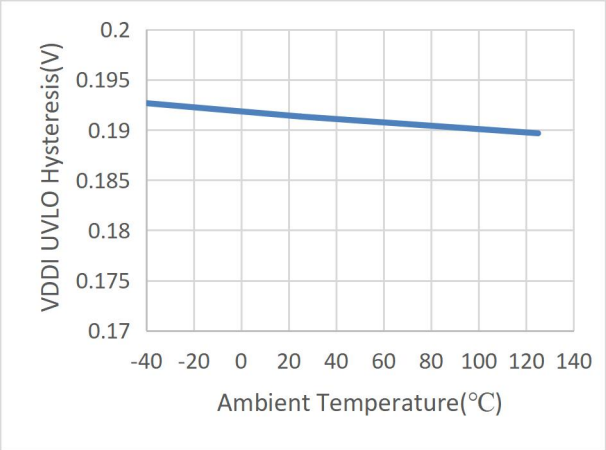

Figure 6.8 VDDI UVLO Hysteresis vs Temperature

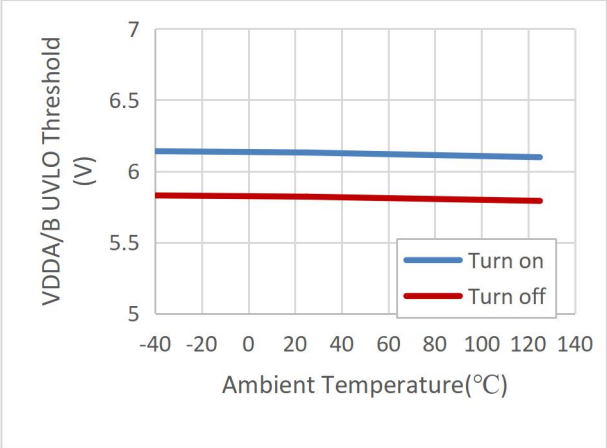

Figure 6.9 6V VDDA/B UVLO Threshold vs Temperature

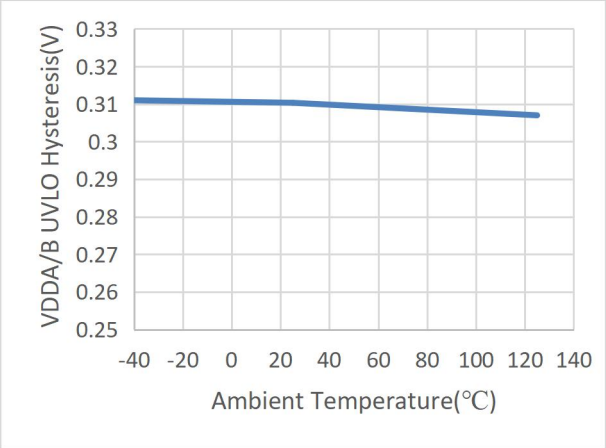

Figure 6.10 6V VDDA/B UVLO Hysteresis vs Temperature

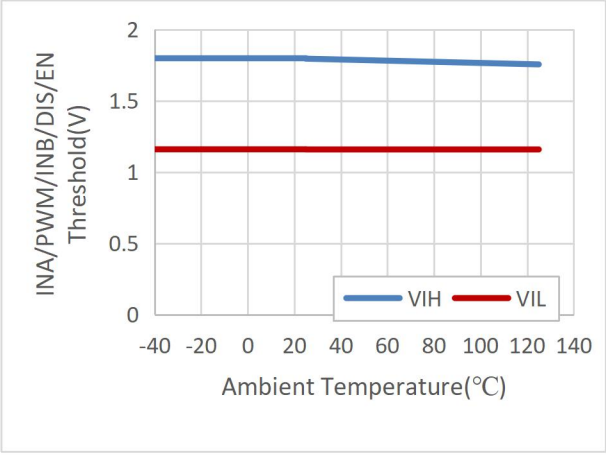

Figure 6.11 INA/PWM/INB/DIS/EN Threshold vs Temperature

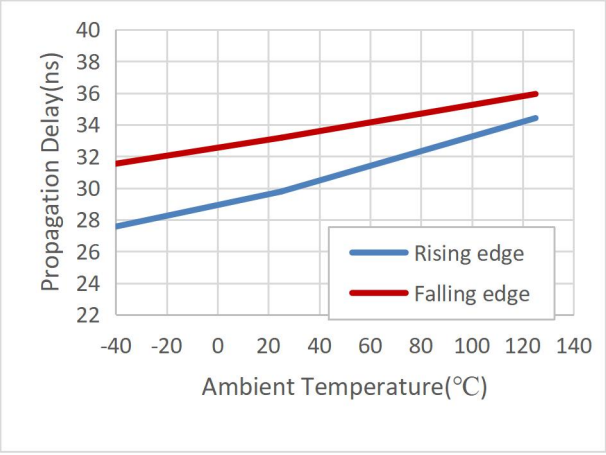

Figure 6.12 Propagation Delay vs Temperature

Copyright © 2023, NOVOSENSE

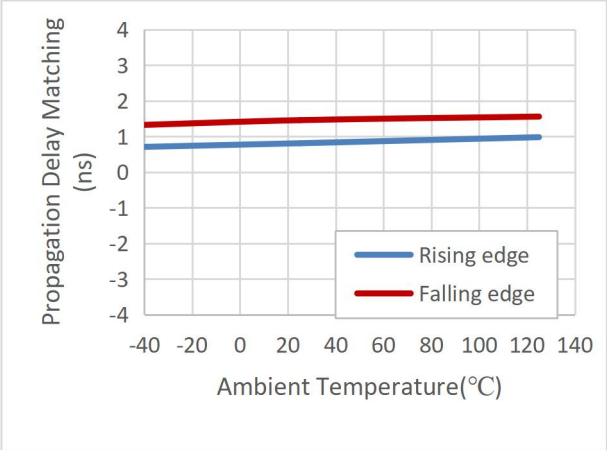

Figure 6.13 Propagation Delay Matching vs Temperature

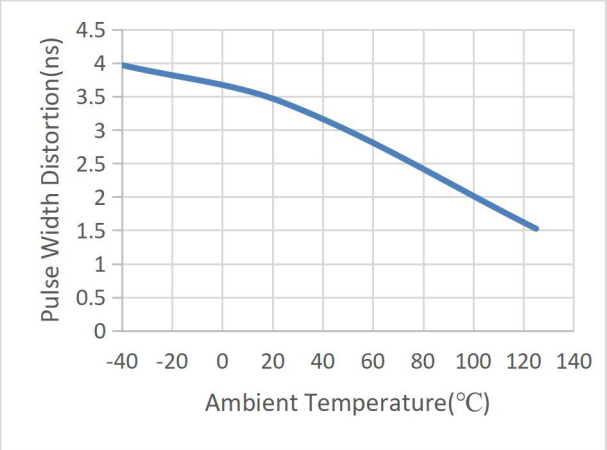

Figure 6.14 Pulse Width Distortion vs Temperature

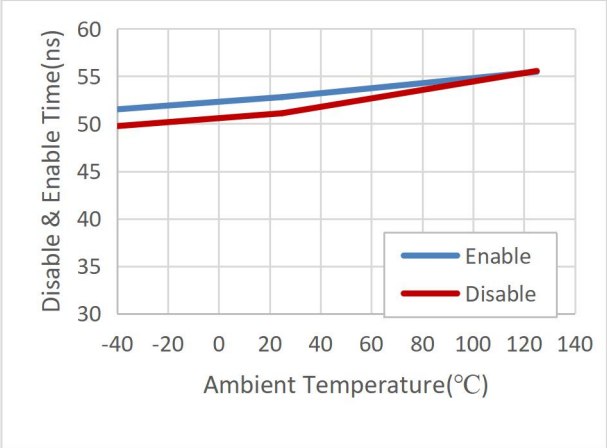

Figure 6.15 Disable & Enable Time vs Temperature

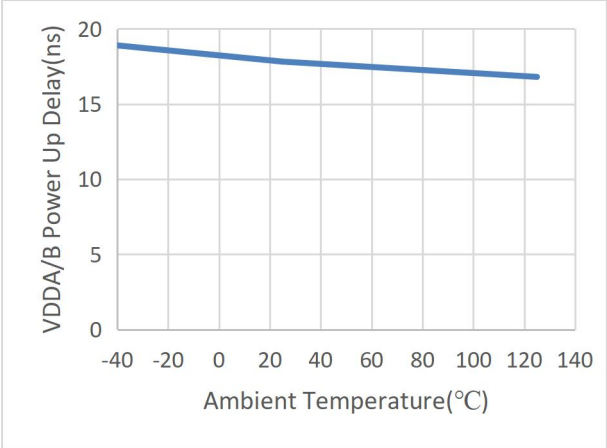

Figure 6.16 VDDA/B power up delay vs Temperature

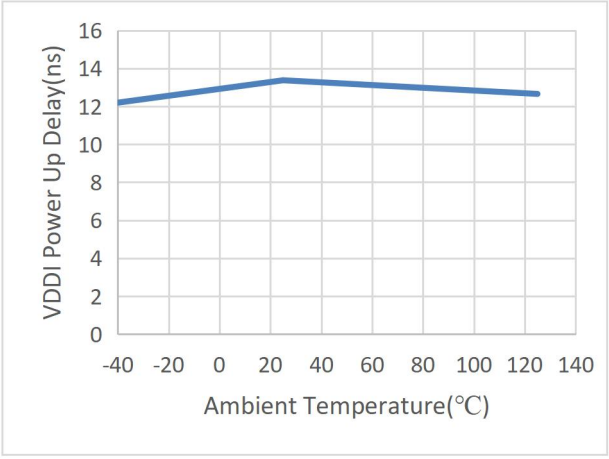

Figure 6.17 VDDI power up delay vs Temperature

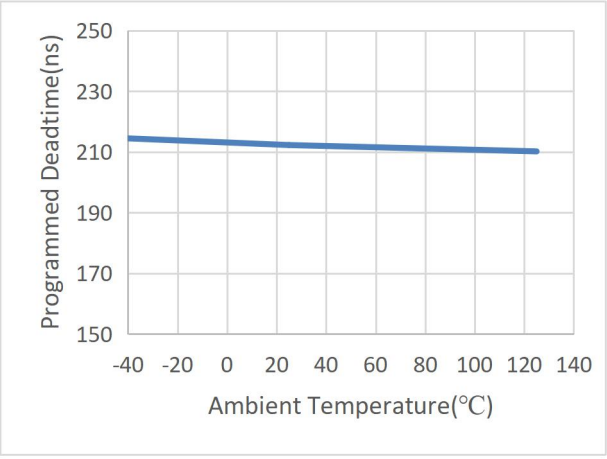

Figure 6.18 Deadtime (RDT=20kΩ) vs Temperature

Copyright © 2023, NOVOSENSE

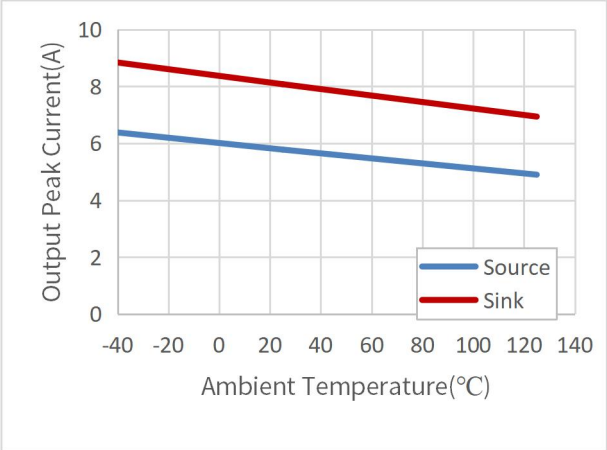

Figure 6.19 Peak current vs Temperature

6.4. Parameter Measurement Information

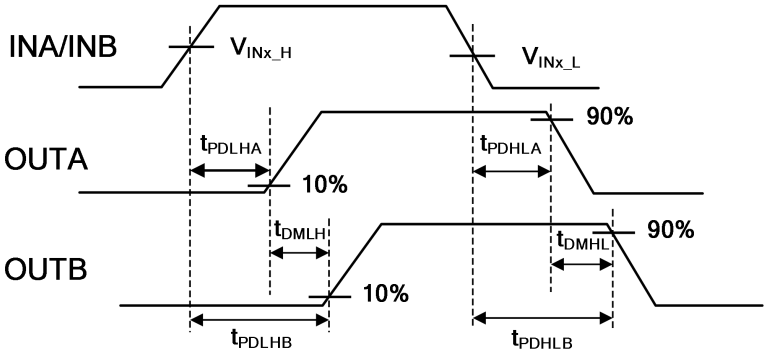

Figure 6.20 Propagation Delay and Channel to Channel Delay Match Time, connect DT to VDDI

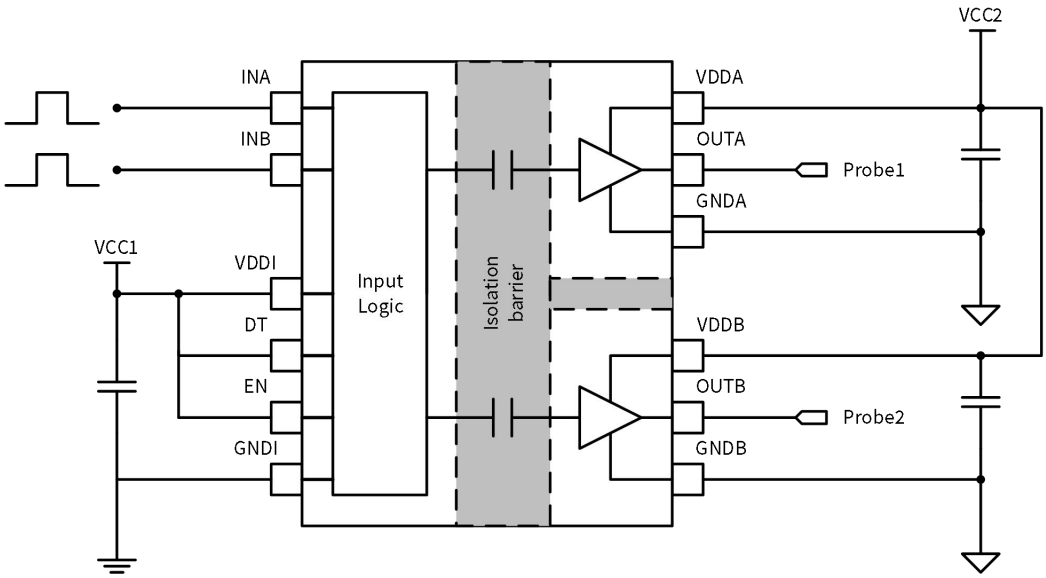

Figure 6.21 Channel to Channel Delay Match Test Circuit

Copyright © 2023, NOVOSENSE

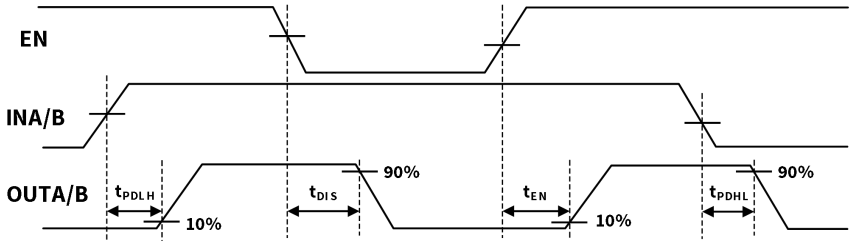

Figure 6.22 Disable Time and Enable Time (NSI6602N, NSI6622N)

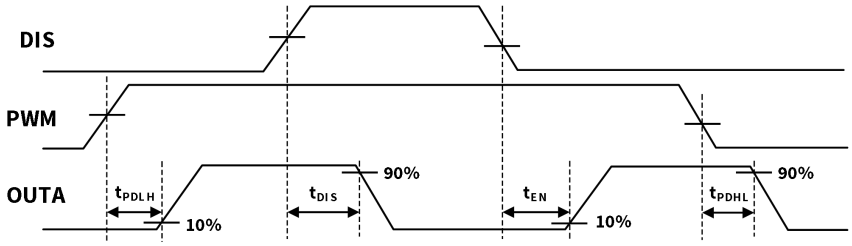

Figure 6.23 Disable Time and Enable Time (NSI6642)

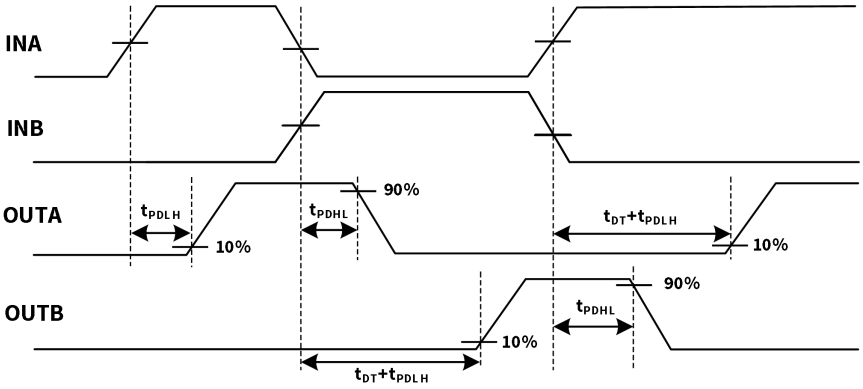

Figure 6.24 Deadtime, Determined by RDT (NSI6602N)

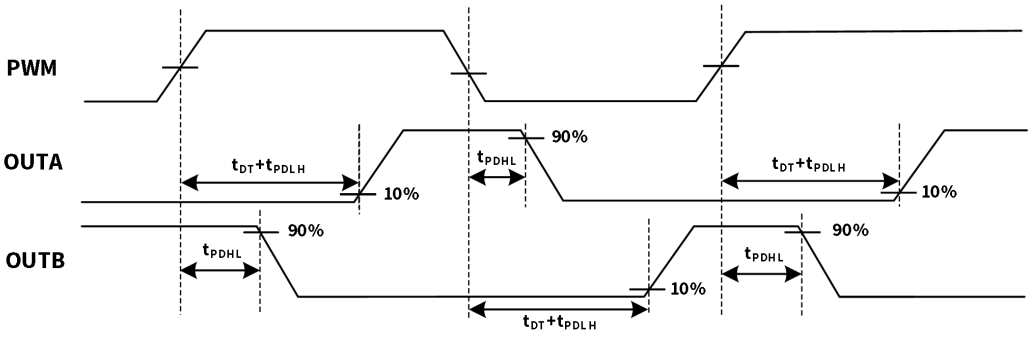

Figure 6.25 Deadtime, Determined by RDT (NSI6642)

Copyright © 2023, NOVOSENSE

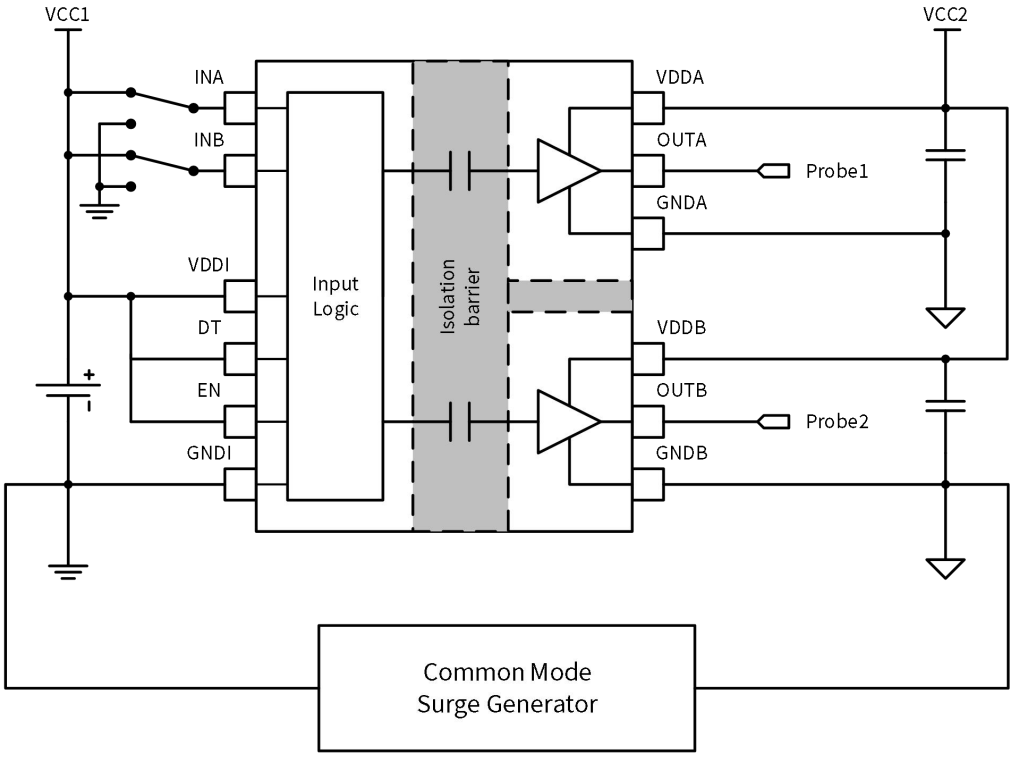

Figure 6.26 Common-Mode Transient Immunity Test Circuit

7. High Voltage Feature Description

7.1. Insulation Characteristics

Description	*Test Condition*	*Symbol*	*Value*			*Unit*
			LGA 13	SOW16/14	SOP16/14	
Min. External Air Gap (Clearance)		CLR	3.5	8	4	mm
Min. External Tracking (Creepage)		CPG	3.5	8	4	mm
Distance through the Insulation		DTI	28			um
Comparative Tracking Index	DIN EN 60112 (VDE 0303-11)	CTI	>600			V
Material Group	IEC 60664-1		I			
Overvoltage Category per IEC60664-1	For Rated Mains Voltage ≤ 150Vrms		I to III	I to IV	I to IV	
	For Rated Mains Voltage ≤ 300Vrms		I to II	I to IV	I to III	
	For Rated Mains Voltage ≤ 600Vrms		I	I to IV	I to II	

Copyright © 2023, NOVOSENSE

Description	Test Condition	Symbol	Value			Unit
	For Rated Mains Voltage ≤ 1000Vrms		/	I to III	/	
Climatic Category			40/125/21			
Pollution Degree	per DIN VDE 0110, Table 1		2			
Maximum Working Isolation Voltage	AC voltage	V_{IOWM}	560	1000	700	V_{RMS}
	DC voltage		792	1414	990	V_{DC}
Maximum Repetitive Isolation Voltage		V_{IORM}	792	1414	990	V_{peak}
Apparent Charge	Method a, after Input/output safety test subgroup 2/3, Vini=V_{IOTM}, t_{ini} = 60s, $V_{pd(m)}$=1.2*V_{IORM}, t_m=10s.	q_{pd}	/	<5	/	pC
	Method a, after environmental tests subgroup 1, Vini=V_{IOTM}, t_{ini}=60s, $V_{pd(m)}$=1.6*V_{IORM}, t_m=10s		/		/	pC
	Method b, routine test (100% production) and preconditioning (type test); V_{ini}=1.2*V_{IOTM}, t_{ini} =1s, $V_{pd\ (m)}$=1.875*V_{IORM}, t_m=1s（method b1）or $V_{pd(m)}$=Vini, t_m=t_{ini}(method b2)		/		/	pC
Apparent Charge	Method a, after Input/output safety test subgroup 2/3, Vini=V_{IOTM}, t_{ini} =60s, $V_{pd(m)}$=1.2*V_{IORM}, t_m=10s	q_{pd}	<5	/	<5	pC
	Method a, after environmental tests subgroup 1, Vini=V_{IOTM}, t_{ini}=60s , $V_{pd(m)}$=1.3*V_{IORM}, t_m=10s			/		pC
	Method b, routine test (100% production) and preconditioning (type test);V_{ini}=1.2*V_{IOTM}, t_{ini}=1s $V_{pd(m)}$=1.5*V_{IORM}, t_m=1s (method b1) or $V_{pd(m)}$=Vini, t_m=t_{ini}(method b2)			/		pC

Copyright © 2023, NOVOSENSE

Description	Test Condition	Symbol	Value			Unit
Maximum Transient Isolation Voltage	t = 60 sec	V_{IOTM}	3535	8000	4242	V_{peak}
Maximum impulse voltage	Tested in air, 1.2/50us waveform per IEC62368-1	V_{imp}	/	6000	3500	V_{peak}
Maximum Surge Isolation Voltage	Test method per IEC62368-1, 1.2/50us waveform, VIOSM ⩾ VIMP × 1.3	V_{IOSM}	3500	10000	6000	V_{peak}
Isolation Resistance	VIO = 500 V, Tamb = 25 °C	R_{IO}	$>10^{12}$			Ω
	VIO = 500 V, Tamb = T_S		$>10^{9}$			Ω
	VIO = 500 V, 100 °C ≤ Tamb ≤ 125 °C		$>10^{11}$			Ω
Isolation Capacitance	f = 1MHz	C_{IO}	1.2			pF
Insulation Specification per UL1577						
Withstand Isolation Voltage	V_{TEST} = 1.2 × V_{ISO}, t = 1 sec, 100% production test	V_{ISO}	2500	5700	3000	V_{rms}

7.2. Safety-Limiting Values

Basic isolation safety-limiting values as outlined in VDE-0884-11 of NSI66x2x-xLAR (LGA13 5x5mm)

Description	Test Condition	Side	Value	Unit
Safety Supply Power	$R_{\theta JA}$ = 209.5 °C/W[1)], T_J = 150 °C, T_A = 25 °C	Input	12	mW
		Driver A, Driver B	293	mW
		Total	598	mW
Safety Supply Current	$R_{\theta JA}$ = 209.5 °C/ W[1)], VDDA/B = 12V, T_J = 150 °C, T_A = 25 °C	Driver A, Driver B	24.4	mA
	$R_{\theta JA}$ = 209.5 °C/ W[1)], VDDA/B = 25V, T_J = 150 °C, T_A = 25 °C	Driver A, Driver B	11.7	mA
Safety Temperature[2)]			150	°C

1) Calculate with the junction-to-air thermal resistance, $R_{\theta JA}$, of LGA13 package (***Thermal Information Table***) which is that of a device installed on a low effective thermal conductivity test board (1s) according to JESD51-3.

2) The maximum safety temperature has the same value as the maximum junction temperature (T_J) specified for the device.

Copyright © 2023, NOVOSENSE

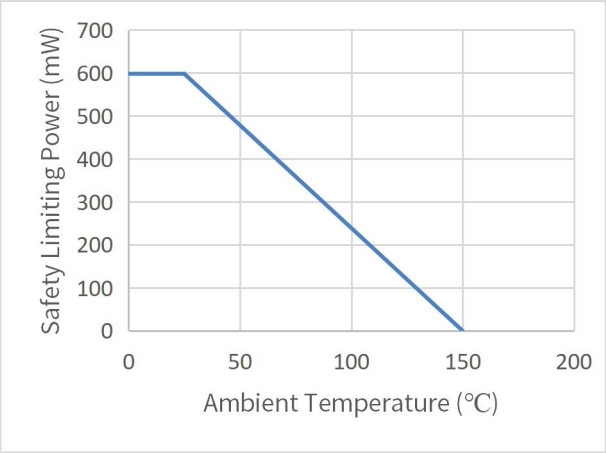

Figure 7.1 NSI66x2x-DLAR Thermal Derating Curve, Dependence of Safety Limiting Values with Case Temperature per DIN VDE V 0884-17.

Reinforced isolation safety-limiting values as outlined in VDE-0884-11 of NSI66x2x-xSWxR (SOW16/SOW14)

Description	*Test Condition*	*Side*	*Value*	*Unit*
Safety Supply Power	$R_{\theta JA}$ = 97 °C/W[1], T_J = 150 °C, T_A = 25 °C	Input	12	mW
		Driver A, Driver B	638	mW
		Total	1288	mW
Safety Supply Current	$R_{\theta JA}$ = 97 °C/ W[1], VDDA/B = 12V, T_J = 150 °C, T_A = 25 °C	Driver A, Driver B	53.1	mA
	$R_{\theta JA}$ = 97 °C/ W[1], VDDA/B = 25V, T_J = 150 °C, T_A = 25 °C	Driver A, Driver B	25.5	mA
Safety Temperature[2]			150	°C

1) Calculate with the junction-to-air thermal resistance, $R_{\theta JA}$, of SOW16/SOW14 package (***Thermal Information Table***) which is that of a device installed on a low effective thermal conductivity test board (1s) according to JESD51-3.

2) The maximum safety temperature has the same value as the maximum junction temperature (T_J) specified for the device.

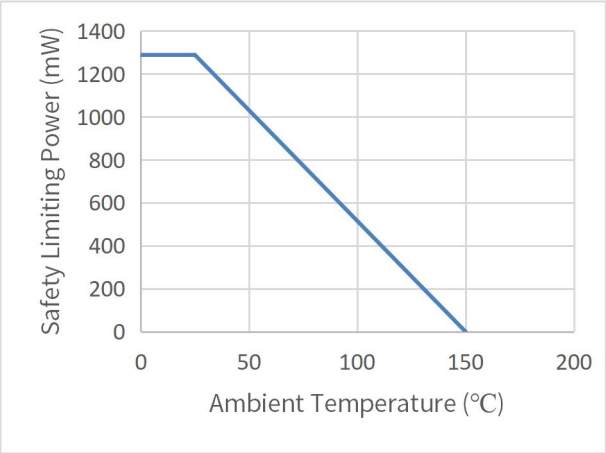

Figure 7.2 NSI66x2x-DSWR Thermal Derating Curve, Dependence of Safety Limiting Values with Case Temperature per DIN VDE V 0884-17.

Basic isolation safety-limiting values as outlined in VDE-0884-11 of NSI66x2x-xSPxR (SOP16/SOP14)

Description	*Test Condition*	*Side*	*Value*	*Unit*

Copyright © 2023, NOVOSENSE

Safety Supply Power	$R_{\theta JA}$ = 150.5 °C/W[1], T_J = 150 °C, T_A = 25 °C	Input	12	mW
		Driver A, Driver B	409	mW
		Total	830	mW
Safety Supply Current	$R_{\theta JA}$ = 150.5 °C/ W[1], VDDA/B = 12V, T_J = 150 °C, T_A = 25 °C	Driver A, Driver B	34.0	mA
	$R_{\theta JA}$ = 150.5 °C/ W[1], VDDA/B = 25V, T_J = 150 °C, T_A = 25 °C	Driver A, Driver B	16.3	mA
Safety Temperature[2]			150	°C

1) Calculate with the junction-to-air thermal resistance, $R_{\theta JA}$, of SOP16/SOP14 package (***Thermal Information Table***) which is that of a device installed on a low effective thermal conductivity test board (1s) according to JESD51-3.

2) The maximum safety temperature has the same value as the maximum junction temperature (T_J) specified for the device.

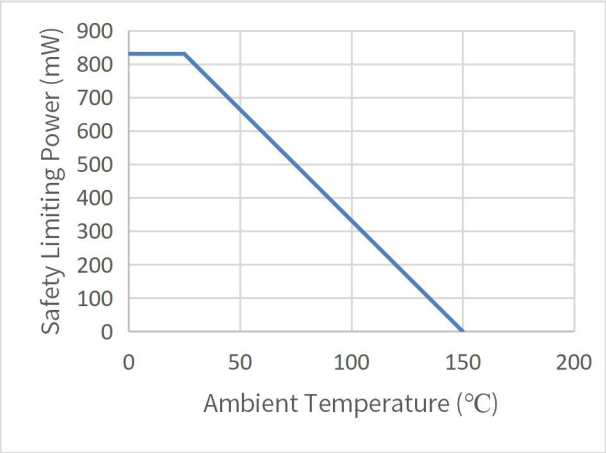

Figure 7.3 NSI66x2x-DSPxR Thermal Derating Curve, Dependence of Safety Limiting Values with Case Temperature per DIN VDE V 0884-17.

Copyright © 2023, NOVOSENSE

7.3. Safety-Related Certifications

The NSI66x2x-xLAR(LGA13 5x5mm) are approved or pending approval by the organizations listed in table.

UL		*VDE*	*CQC*
UL1577 Component Recognition Program	Approved under CSA Component Acceptance Notice 5A	Certified according to DIN VDE V 0884-17	Certified according to GB4943.1
Single Protection, 2500Vrms Isolation voltage	Single Protection, 2500Vrms Isolation voltage	Basic Insulation at V_{IORM}=792V_{PEAK} V_{IOSM}=3500V_{PEAK} V_{IOTM}=3535V_{PEAK}	Basic insulation
E500602	E500602	File(pending)	CQC21001289933

The NSI66x2x-xSWxR(SOW16/SOW14) are approved or pending approval by the organizations listed in table.

UL		*VDE*	*CQC*
UL 1577 Component Recognition Program	Approved under CSA Component Acceptance Notice 5A	Certified according to DIN EN IEC 60747-17 (VDE 0884-17)	Certified according to GB4943.1
Single Protection, 5700Vrms Isolation voltage	Single Protection, 5700Vrms Isolation voltage	Reinforced insulation at V_{IORM}=1414V_{peak} V_{IOSM}=10000V_{peak} V_{IOTM}=8000V_{peak}	Reinforced insulation
E500602	E500602	40052820	CQC21001289932

The NSI66x2x-xSPNR(SOP16) are approved or pending approval by the organizations listed in table.

UL		*VDE*	*CQC*
UL 1577 Component Recognition Program	Approved under CSA Component Acceptance Notice 5A	Certified according to DIN VDE V 0884-17	Certified according to GB4943.1
Single Protection, 3000Vrms Isolation voltage	Single Protection, 3000Vrms Isolation voltage	Basic insulation at V_{IORM}=990V_{peak} V_{IOSM}=6000V_{peak} V_{IOTM}=4242V_{peak}	Basic insulation
E500602	E500602	40057024	CQC21001289932

Copyright © 2023, NOVOSENSE

The NSI66x2x-xSPOR(SOP14) are approved or pending approval by the organizations listed in table.

UL		*VDE*	*CQC*
UL 1577 Component Recognition Program	Approved under CSA Component Acceptance Notice 5A	Certified according to DIN VDE V 0884-17	Certified according to GB4943.1
Single Protection, 3000Vrms Isolation voltage	Single Protection, 3000Vrms Isolation voltage	Basic insulation at V_{IORM}=990V_{peak} V_{IOSM}=6000V_{peak} V_{IOTM}=4242V_{peak}	Basic insulation
File(pending)	File(pending)	File(pending)	File(pending)

8. Function Description

8.1. Overview

NSI66x2x is a high reliability dual channel isolated gate driver which could be designed in variety switching power and motor drive topologies. NSI66x2x has some useful protections, such as under voltage lock out (UVLO) for both input and output supply, enable function, deadtime control, default low output as input is floating. The functional circuit block diagram is shown as below:

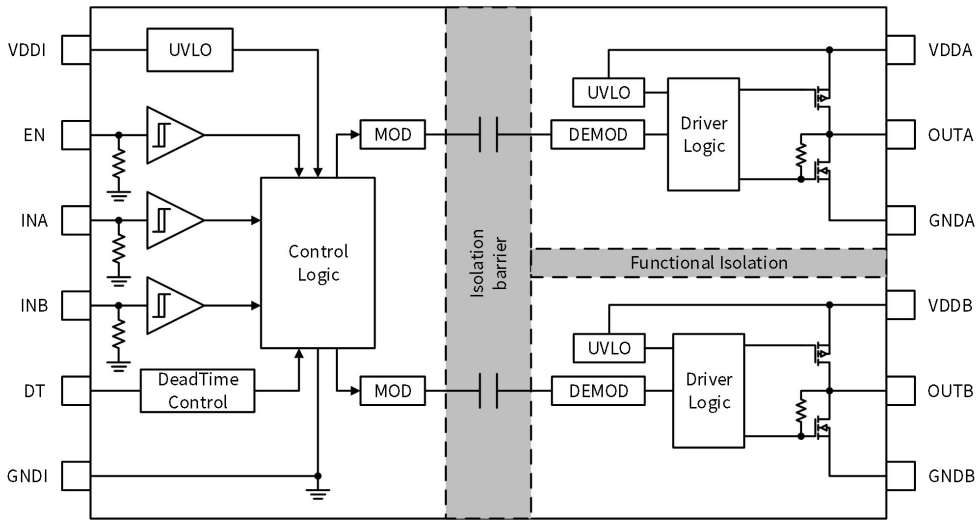

Figure 8.1 Functional Block Diagram (NSI6602N)

Copyright © 2023, NOVOSENSE

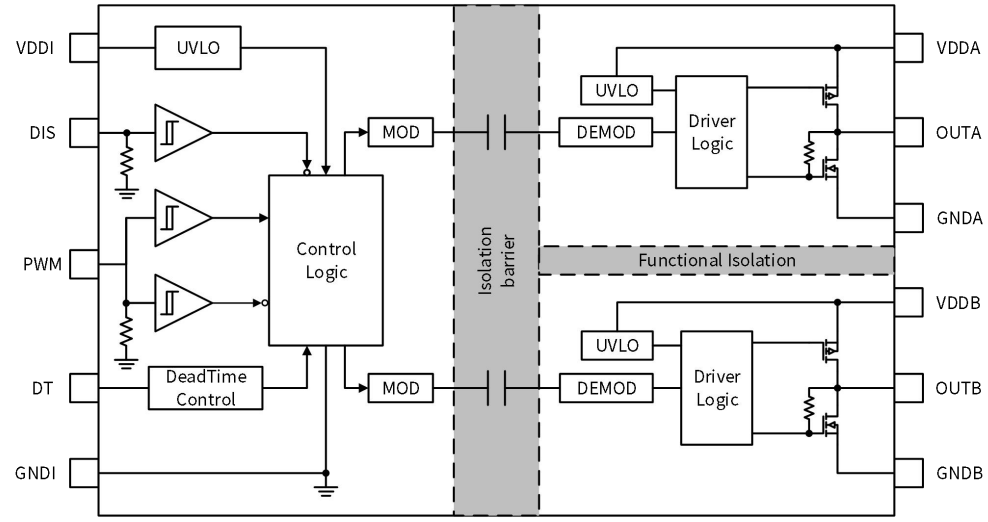

Figure 8.2 Functional Block Diagram (NSI6642)

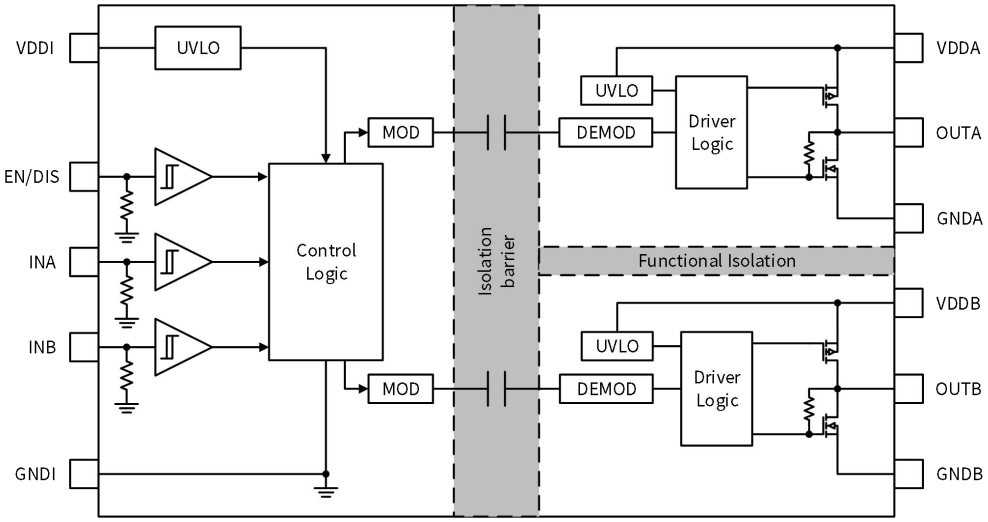

Figure 8.3 Functional Block Diagram (NSI6622x)

8.2. Undervoltage Lockout (UVLO)

The NSI66x2x has an internal under voltage lock out (UVLO) protection on both input and output supply circuit blocks. The driver output is held low by an active clamp circuit when the supply voltage of VDDI or VDDA/VDDB is lower than V_{VDD_ON} at power-up status or lower than V_{VDD_OFF} after power-up, regardless of the status of the input pins.

The VDDI and VDDA/B ULVO protections have hysteresis (V_{VDD_HYS}) to prevent chatter noise from VDD supply and allow small drops in supply power which are usually happened in startup.

Copyright © 2023, NOVOSENSE

8.3. Input and Output Logic Table

The table below consists of truth tables for the NSI66x2x families.

Table 8.1 Output status vs Input and Power status (NSI6602N)

VDDI status	VDDA/B status	EN	IN		OUT		NOTE
			A	B	A	B	
PU	PU	H	L	H	L	H	If Deadtime function is used, output transits to high after the deadtime expires.
PU	PU	H	H	L	H	L	
PU	PU	H	H	H	H	H	DT pin is pulled to VDDI.
PU	PU	H	H	H	L	L	DT is left open or programmed with R_{DT}.
PU	PU	H	L or O	L or O	L	L	
PU	PU	L or O	X	X	L	L	Device is disabled.
PU	PD	X	X	X	L	L	
PD	PU	X	X	X	L	L	

Table 8.2 Output status vs Input and Power status (NSI6642)

VDDI status	VDDA/B status	DIS	PWM	OUT		NOTE
				A	B	
PU	PU	L or O	L or O	L	H	If Deadtime function is used, output transits to high after the deadtime expires.
PU	PU	L or O	H	H	L	
PU	PU	H	X	L	L	Device is disabled.
PU	PD	X	X	L	L	
PD	PU	X	X	L	L	

Table 8.3 Output status vs Input and Power status (NSI6622N)

VDDI status	VDDA/B status	EN	IN		OUT		NOTE
			A	B	A	B	
PU	PU	H	L	H	L	H	
PU	PU	H	H	L	H	L	
PU	PU	H	H	H	H	H	
PU	PU	H	L or O	L or O	L	L	
PU	PU	L or O	X	X	L	L	Device is disabled.

Copyright © 2023, NOVOSENSE

PU	PD	X	X	X	L	L	
PD	PU	X	X	X	L	L	

Table 8.4 Output status vs Input and Power status (NSI6622V)

VDDI status	*VDDA/B status*	*DIS*	*IN*		*OUT*		*NOTE[1)]*
			A	*B*	*A*	*B*	
PU	PU	L or O	L	H	L	H	
PU	PU	L or O	H	L	H	L	
PU	PU	L or O	H	H	H	H	
PU	PU	L or O	L or O	L or O	L	L	
PU	PU	H	X	X	L	L	Device is disabled.
PU	PD	X	X	X	L	L	
PD	PU	X	X	X	L	L	

1) PD= Power Down; PU= Power Up; H= Logic High; L= Logic Low; O= Left Open; X= Irrelevant.

8.4. Programmable Deadtime (DT pin)

8.4.1. Pulling the DT Pin to VDDI

This allows outputs match inputs completely and no deadtime is asserted.

8.4.2. DT Pin Left Open or Connected to a Programming Resistor between DT and GNDI Pins

If the DT pin is left open, the deadtime duration (t_{DT}) is set to <35ns. t_{DT} can be programmed by placing a resistor, R_{DT}, between the DT pin and GNDI. The appropriate R_{DT} value can be determined from Equation 1, where R_{DT} is in kΩ and t_{DT} in ns:

$$t_{DT} \approx 10 \times R_{DT} \quad (1)$$

The recommended value of R_{DT} is between from 1kΩ to 200kΩ. The steady state voltage at DT pin is about 0.8V and the DT pin current will be less than 10uA when R_{DT} =100kΩ. It is also recommended to parallel a ceramic capacitor, for example 2.2nF, with R_{DT} to achieve better noise immunity.

The programmed deadtime is activated by the input signal's falling edge to prevent shoot-through when the device is designed in an application of high side and low side driver. The details of input and output logic with deadtime are shown as Figure 8.4:

Copyright © 2023, NOVOSENSE

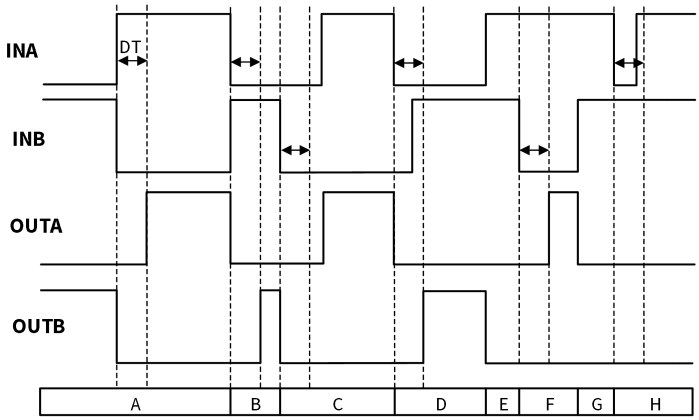

Figure 8.4 Input and Output Logic with the Programmed Deadtime (NSI6602N)

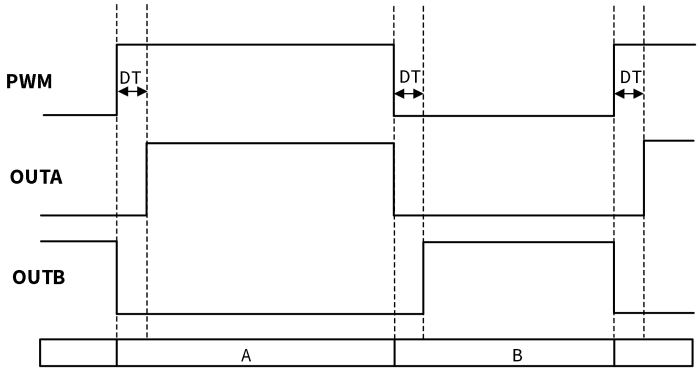

Figure 8.5 Input and Output Logic with the Programmed Deadtime (NSI6642)

Condition	*Result*
A: INA goes high, and INB goes low.	OUTB goes low immediately, then OUTA goes high after the programmed deadtime which is assigned at INB goes low.
B: INA goes low, and INB goes high.	OUTA goes low immediately, then OUTB goes high after the programmed deadtime which is assigned at INA goes low.
C: INB goes low, then INA goes high after deadtime.	OUTB goes low immediately, then OUTA goes high immediately when INA goes high.
D: INA goes low, then INB goes high before deadtime.	OUTA goes low immediately, then OUTB goes high after deadtime
E: INA goes high, INB is still high.	OUTB goes low immediately and OUTA keeps low.
F: INA is still high, INB goes low.	OUTA goes high after deadtime while INB is low and OUTB keeps low.
G: INA is still high, INB goes high after deadtime	OUTA goes low immediately and OUTB keeps low.
H: INA goes low then goes high before deadtime while INB is still high.	OUTA keeps low and OUTB keeps low because deadtime control.

Copyright © 2023, NOVOSENSE

8.5. ESD Protection

Figure 8.3 shows the multiple diodes involved in the ESD protection part of NSI66x2x.

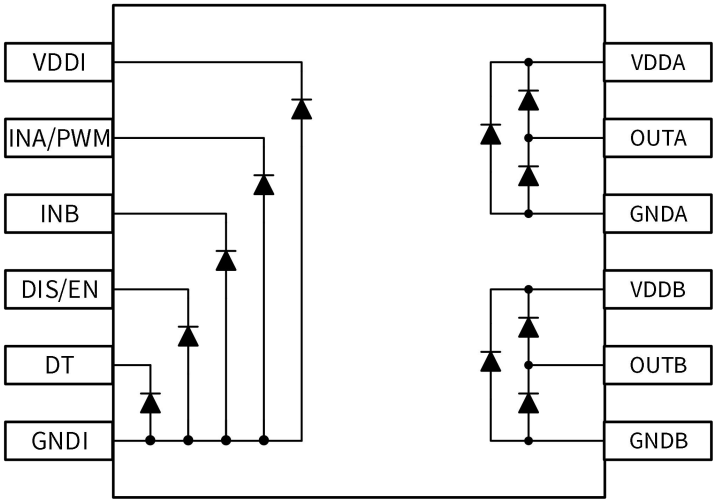

Figure 8.6 ESD Structure (NSI66x2x)

9. Application Note

9.1. Typical Application Circuit

The circuit shows a typical half-bridge configuration by using the driver NSi66x2x which could be used in several popular power converter topologies such as half-bridge/ full bridge / LLC isolated topologies, buck-boost topologies and 3-phase motor drive applications.

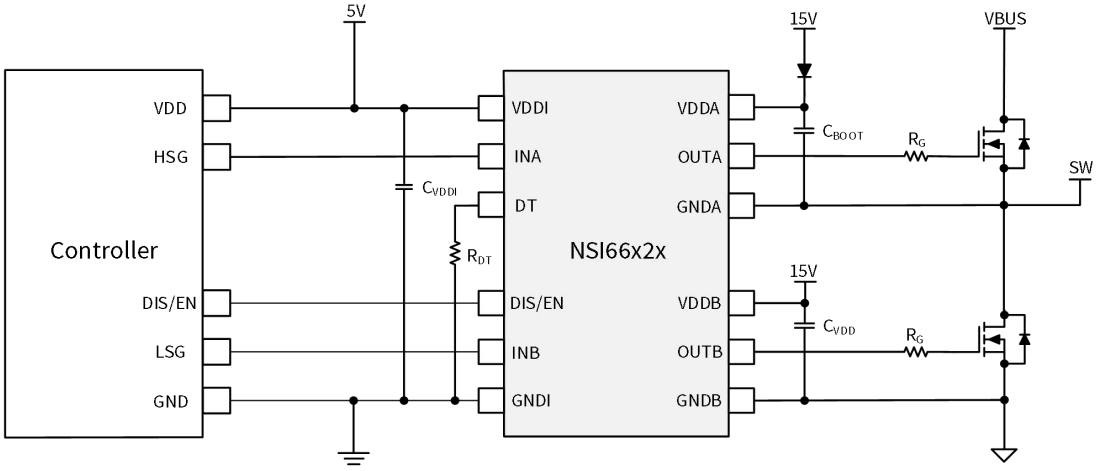

Figure 9.1 Typical Half-Bridge Application Schematic

9.2. PCB Layout

PCB layout is important to get optimal performance. Some key guidelines are given as below:

- Low-ESR and low-ESL bypass capacitors should be placed close to the device between pin VDDI to GNDI and pin VDDA/B to GNDA/B.

Copyright © 2023, NOVOSENSE

- There is high frequency switching current that charges and discharges the gate of external power transistor, leading to EMI and ring issues. The parasitic inductance of this loop should be minimized, by decreasing loop area and placing NSI66x2x close to power transistor.
- Large amount of copper should be placed at VDDA/B pin and GNDA/B pin for thermal dissipation.
- To ensure isolation performance between primary and secondary side, the space under the device should keep free from any plane, trace, pad or via.

10. Package information

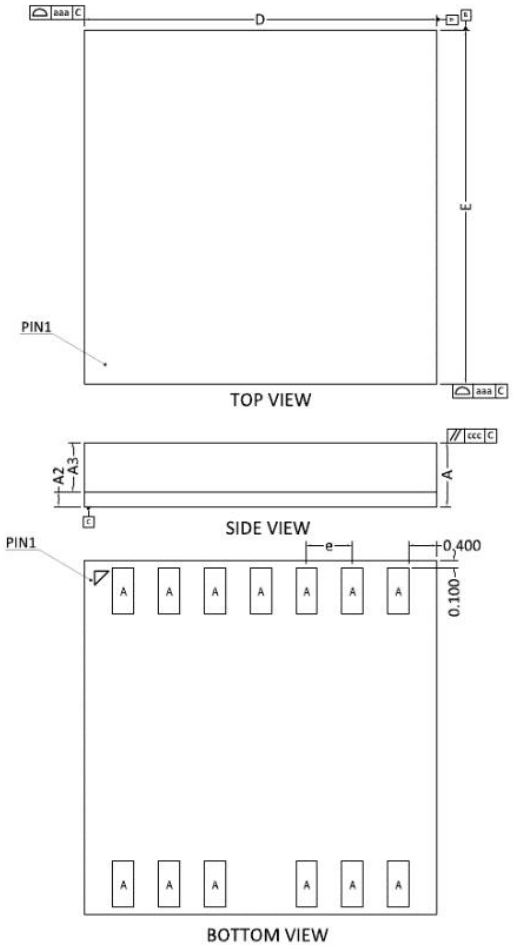

MILLIMETER			
SYMBOL	MIN	NOR	MAX
A	0.83	0.91	0.99
A2	0.18	0.21	0.24
A3	0.65	0.70	0.75
D	4.90	5.00	5.10
E	4.90	5.00	5.10
e	0.65 BSC		
aaa	0.10		
ccc	0.05		

Figure 10.1 LGA13 5-mm x 5-mm Package Shape and Dimension

Copyright © 2023, NOVOSENSE

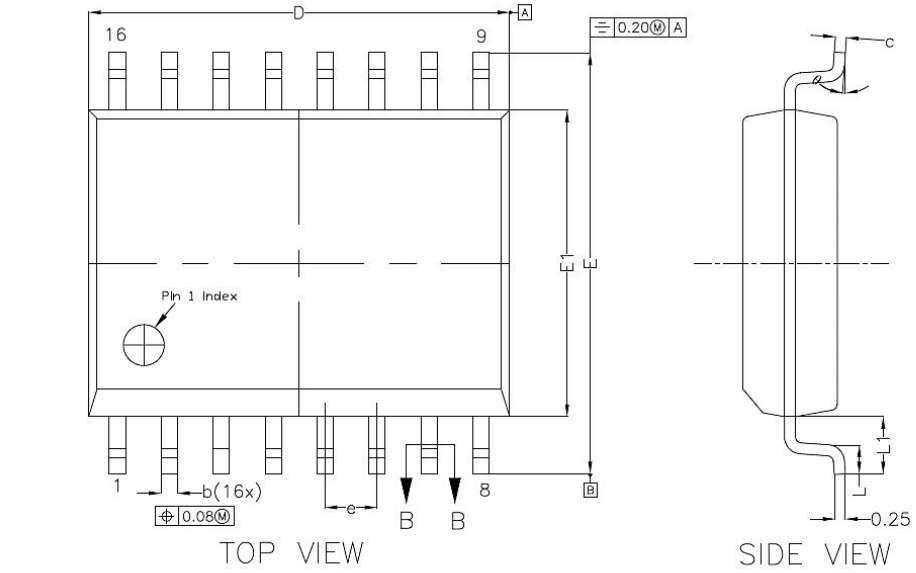

* CONTROLLING DIMENSION : MM

SYMBOL	MILLIMETER		
	MIN.	NOM.	MAX.
A	---	---	2.65
A1	0.10	---	030
A2	2.25	2.30	2.35
A3	0.97	1.02	1.07
b	0.35	---	0.43
c	0.23	---	0.32
D	10.20	10.30	10.40
E	10.10	10.30	10.50
E1	7.40	7.50	7.60
e	1.27 bsc		
L1	1.40 bsc		
L	0.55	---	0.85
Y	---	0.10	---
θ	0°	---	8°

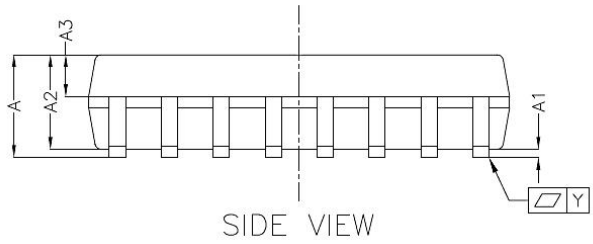

NOTES

1.0 COPLANARITY APPLIES TO LEADS, CORNER LEADS AND DIE ATTACH PAD.

Figure 10.2 SOW16 Package Shape and Dimension

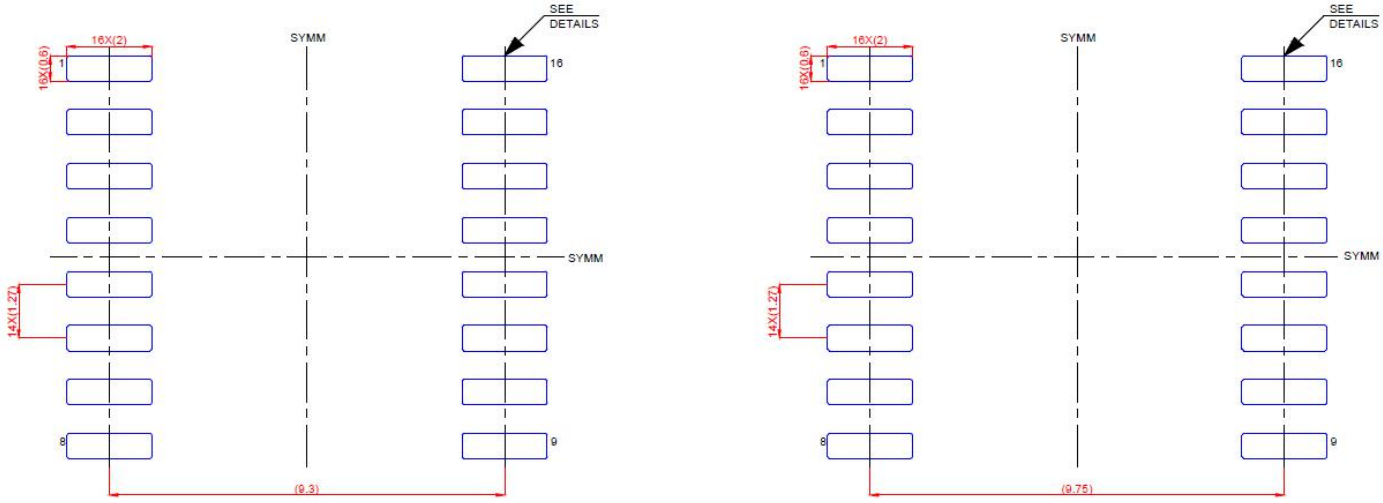

Figure 10.3 SOW16 Package Board Layout Example(mm)

Copyright © 2023, NOVOSENSE

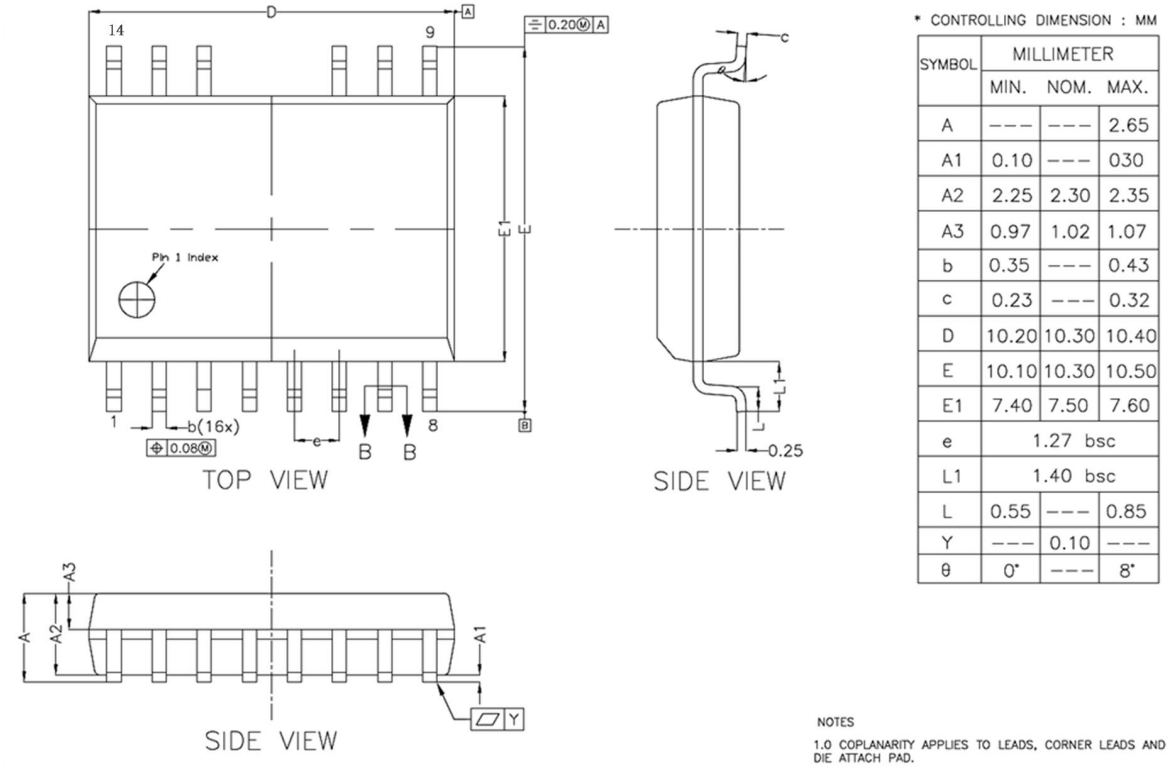

* CONTROLLING DIMENSION : MM

SYMBOL	MILLIMETER		
	MIN.	NOM.	MAX.
A	---	---	2.65
A1	0.10	---	030
A2	2.25	2.30	2.35
A3	0.97	1.02	1.07
b	0.35	---	0.43
c	0.23	---	0.32
D	10.20	10.30	10.40
E	10.10	10.30	10.50
E1	7.40	7.50	7.60
e	1.27 bsc		
L1	1.40 bsc		
L	0.55	---	0.85
Y	---	0.10	---
θ	0°	---	8°

NOTES

1.0 COPLANARITY APPLIES TO LEADS, CORNER LEADS AND DIE ATTACH PAD.

Figure 10.4 SOW14 Package Shape and Dimension

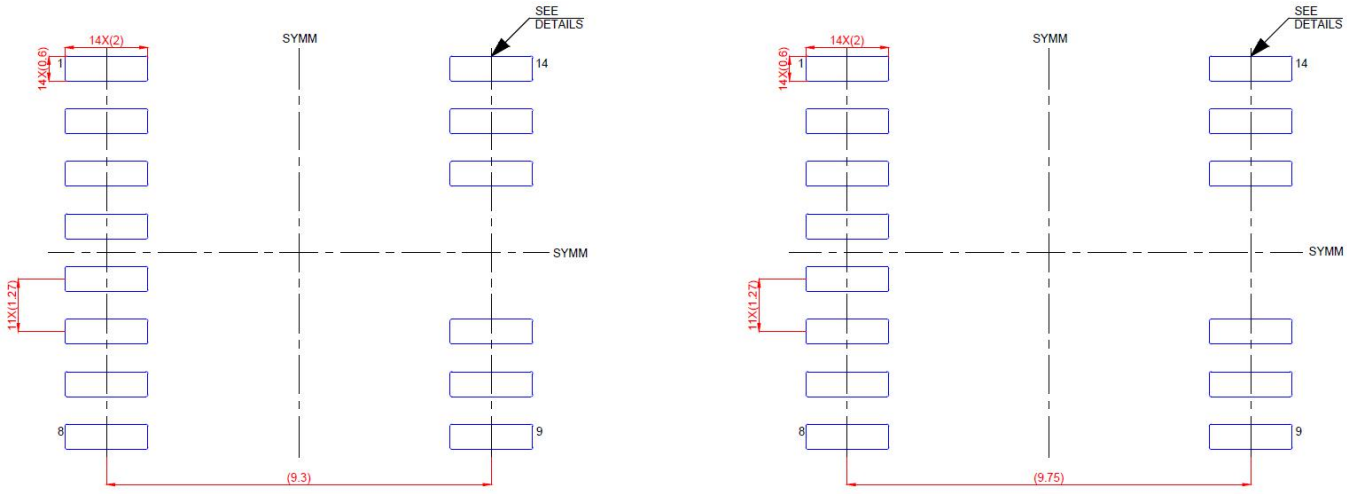

Figure 10.5 SOW14 Package Board Layout Example(mm)

Copyright © 2023, NOVOSENSE

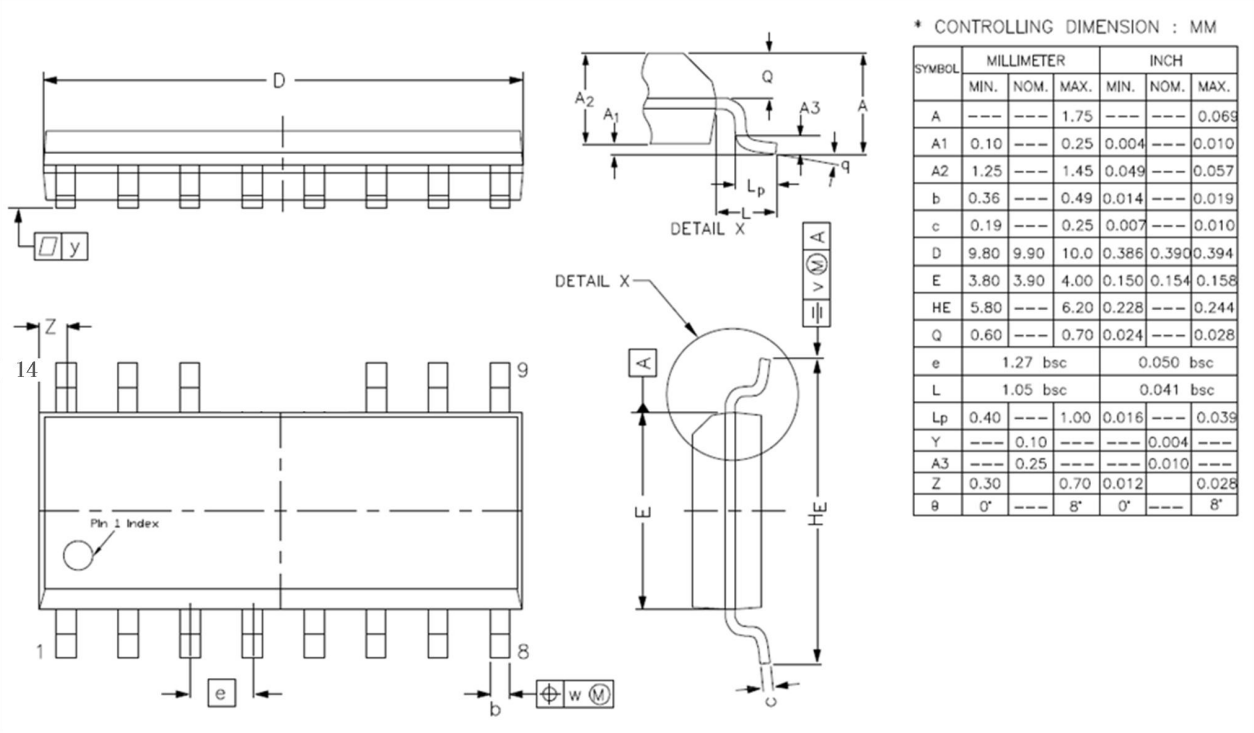

* CONTROLLING DIMENSION : MM

SYMBOL	MILLIMETER			INCH		
	MIN.	NOM.	MAX.	MIN.	NOM.	MAX.
A	---	---	1.75	---	---	0.069
A1	0.10	---	0.25	0.004	---	0.010
A2	1.25	---	1.45	0.049	---	0.057
b	0.36	---	0.49	0.014	---	0.019
c	0.19	---	0.25	0.007	---	0.010
D	9.80	9.90	10.0	0.386	0.390	0.394
E	3.80	3.90	4.00	0.150	0.154	0.158
HE	5.80	---	6.20	0.228	---	0.244
Q	0.60	---	0.70	0.024	---	0.028
e	1.27 bsc			0.050 bsc		
L	1.05 bsc			0.041 bsc		
Lp	0.40	---	1.00	0.016	---	0.039
Y	---	0.10	---	---	0.004	---
A3	---	0.25	---	---	0.010	---
Z	0.30		0.70	0.012		0.028
θ	0°	---	8°	0°	---	8°

Figure 10.6 SOP14 Package Shape and Dimension

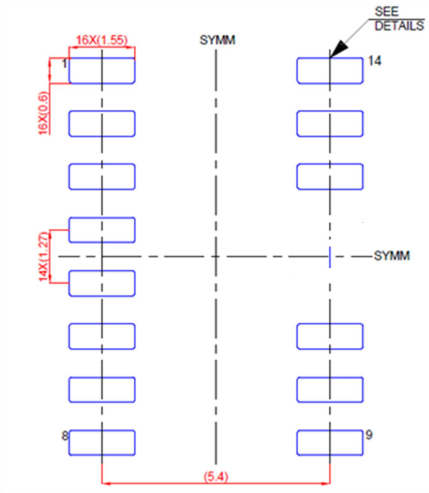

Figure 10.7 SOP14 Package Board Layout Example(mm)

Copyright © 2023, NOVOSENSE

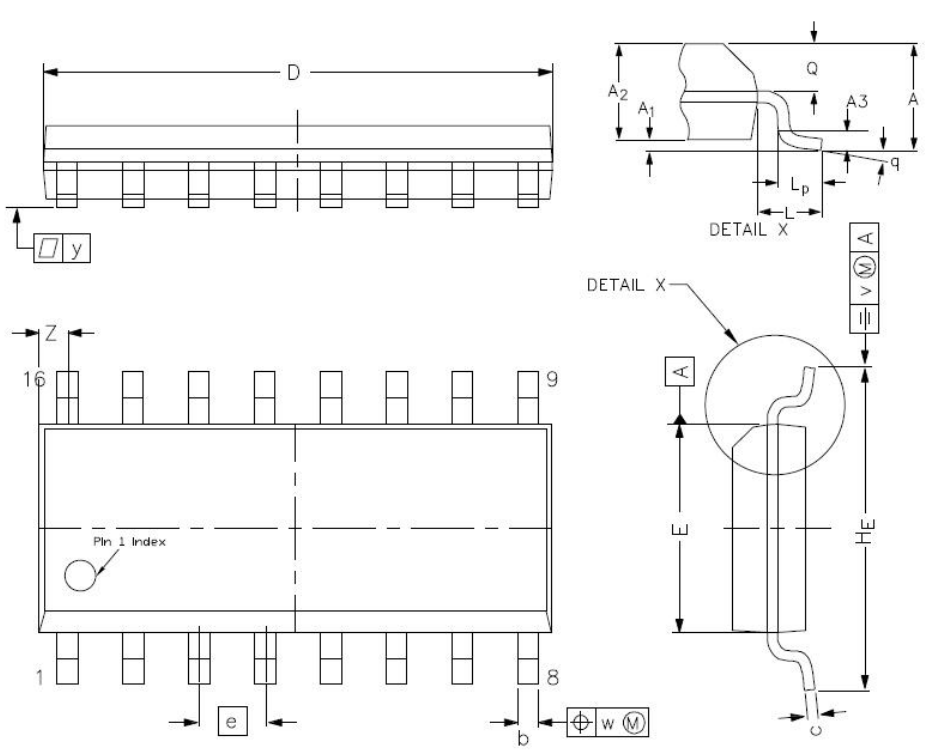

* CONTROLLING DIMENSION : MM

SYMBOL	MILLIMETER			INCH		
	MIN.	NOM.	MAX.	MIN.	NOM.	MAX.
A	---	---	1.75	---	---	0.069
A1	0.10	---	0.25	0.004	---	0.010
A2	1.25	---	1.45	0.049	---	0.057
b	0.36	---	0.49	0.014	---	0.019
c	0.19	---	0.25	0.007	---	0.010
D	9.80	9.90	10.0	0.386	0.390	0.394
E	3.80	3.90	4.00	0.150	0.154	0.158
HE	5.80	---	6.20	0.228	---	0.244
Q	0.60	---	0.70	0.024	---	0.028
e	1.27 bsc			0.050 bsc		
L	1.05 bsc			0.041 bsc		
Lp	0.40	---	1.00	0.016	---	0.039
Y	---	0.10	---	---	0.004	---
A3	---	0.25	---	---	0.010	---
Z	0.30		0.70	0.012		0.028
θ	0°	---	8°	0°	---	8°

Figure 10.8 SOP16 Package Shape and Dimension

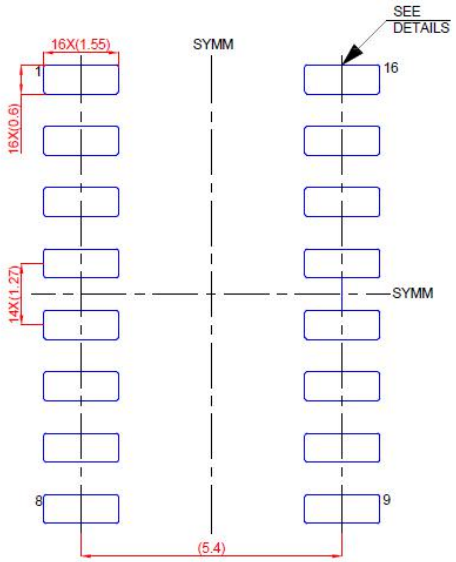

Figure 10.9 SOP16 Package Board Layout Example(mm)

Copyright © 2023, NOVOSENSE

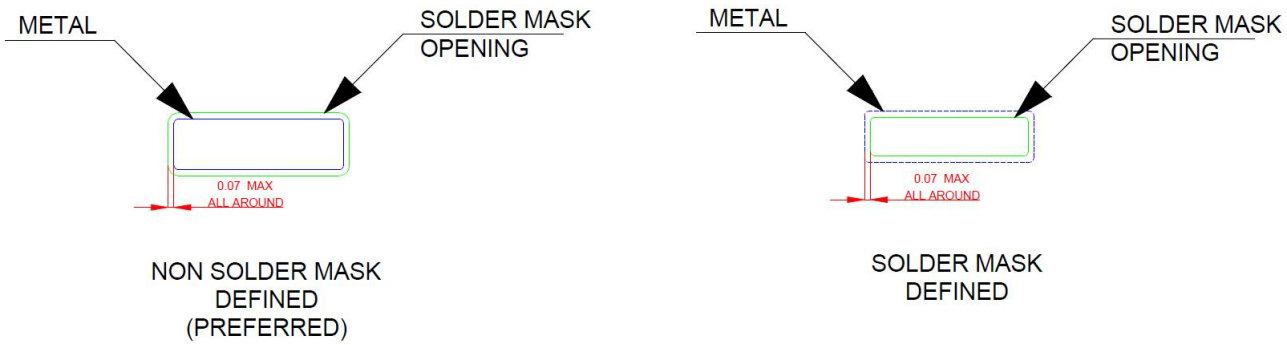

Figure 10.10 Solder Mask Details(mm)

Copyright © 2023, NOVOSENSE

11. Ordering Information

Part No.	Isolation Rating (kV_{RMS})	Driver-side UVLO TYP.	Temperature	Body Size (mm)	Package	MSL	SPQ
NSI6602NA-DLAR	2.5	6V	-40 to 125℃	5X5X0.91	LGA13(5x5mm)	3	3000
NSI6602NA-DSWR	5.7	6V	-40 to 125℃	10.3X7.5X2.65	SOW16	2	1000
NSI6602NA-DSWKR	5.7	6V	-40 to 125℃	10.3X7.5X2.65	SOW14	2	1000
NSI6602NA-DSPNR	3.0	6V	-40 to 125℃	9.9X3.9X1.75	SOP16	2	2500
NSI6602NA-DSPOR	3.0	6V	-40 to 125℃	9.9X3.9X1.75	SOP14	2	2500
NSI6602NB-DLAR	2.5	8V	-40 to 125℃	5X5X0.91	LGA13(5x5mm)	3	3000
NSI6602NB-DSWR	5.7	8V	-40 to 125℃	10.3X7.5X2.65	SOW16	2	1000
NSI6602NB-DSWKR	5.7	8V	-40 to 125℃	10.3X7.5X2.65	SOW14	2	1000
NSI6602NB-DSPNR	3.0	8V	-40 to 125℃	9.9X3.9X1.75	SOP16	2	2500
NSI6602NB-DSPOR	3.0	8V	-40 to 125℃	9.9X3.9X1.75	SOP14	2	2500
NSI6602NC-DLAR	2.5	13V	-40 to 125℃	5X5X0.91	LGA13(5x5mm)	3	3000
NSI6602NC-DSWR	5.7	13V	-40 to 125℃	10.3X7.5X2.65	SOW16	2	1000
NSI6602NC-DSWKR	5.7	13V	-40 to 125℃	10.3X7.5X2.65	SOW14	2	1000
NSI6602NC-DSPNR	3.0	13V	-40 to 125℃	9.9X3.9X1.75	SOP16	2	2500
NSI6602NC-DSPOR	3.0	13V	-40 to 125℃	9.9X3.9X1.75	SOP14	2	2500
NSI6602ND-DLAR	2.5	4V	-40 to 125℃	5X5X0.91	LGA13(5x5mm)	3	3000
NSI6602ND-DSWR	5.7	4V	-40 to 125℃	10.3X7.5X2.65	SOW16	2	1000
NSI6602ND-DSWKR	5.7	4V	-40 to 125℃	10.3X7.5X2.65	SOW14	2	1000
NSI6602ND-DSPNR	3.0	4V	-40 to 125℃	9.9X3.9X1.75	SOP16	2	2500
NSI6602ND-DSPOR	3.0	4V	-40 to 125℃	9.9X3.9X1.75	SOP14	2	2500
NSI6642A-DLAR	2.5	6V	-40 to 125℃	5X5X0.91	LGA13(5x5mm)	3	3000
NSI6642A-DSWR	5.7	6V	-40 to 125℃	10.3X7.5X2.65	SOW16	2	1000
NSI6642A-DSWKR	5.7	6V	-40 to 125℃	10.3X7.5X2.65	SOW14	2	1000
NSI6642A-DSPNR	3.0	6V	-40 to 125℃	9.9X3.9X1.75	SOP16	2	2500
NSI6642A-DSPOR	3.0	6V	-40 to 125℃	9.9X3.9X1.75	SOP14	2	2500
NSI6642B-DLAR	2.5	8V	-40 to 125℃	5X5X0.91	LGA13(5x5mm)	3	3000
NSI6642B-DSWR	5.7	8V	-40 to 125℃	10.3X7.5X2.65	SOW16	2	1000
NSI6642B-DSWKR	5.7	8V	-40 to 125℃	10.3X7.5X2.65	SOW14	2	1000
NSI6642B-DSPNR	3.0	8V	-40 to 125℃	9.9X3.9X1.75	SOP16	2	2500
NSI6642B-DSPOR	3.0	8V	-40 to 125℃	9.9X3.9X1.75	SOP14	2	2500
NSI6642C-DLAR	2.5	13V	-40 to 125℃	5X5X0.91	LGA13(5x5mm)	3	3000
NSI6642C-DSWR	5.7	13V	-40 to 125℃	10.3X7.5X2.65	SOW16	2	1000
NSI6642C-DSWKR	5.7	13V	-40 to 125℃	10.3X7.5X2.65	SOW14	2	1000
NSI6642C-DSPNR	3.0	13V	-40 to 125℃	9.9X3.9X1.75	SOP16	2	2500
NSI6642C-DSPOR	3.0	13V	-40 to 125℃	9.9X3.9X1.75	SOP14	2	2500

Copyright © 2023, NOVOSENSE

NSI6642D-DLAR	2.5	4V	-40 to 125℃	5X5X0.91	LGA13(5x5mm)	3	3000
NSI6642D-DSWR	5.7	4V	-40 to 125℃	10.3X7.5X2.65	SOW16	2	1000
NSI6642D-DSWKR	5.7	4V	-40 to 125℃	10.3X7.5X2.65	SOW14	2	1000
NSI6642D-DSPNR	3.0	4V	-40 to 125℃	9.9X3.9X1.75	SOP16	2	2500
NSI6642D-DSPOR	3.0	4V	-40 to 125℃	9.9X3.9X1.75	SOP14	2	2500
NSI6622NA-DLAR	2.5	6V	-40 to 125℃	5X5X0.91	LGA13(5x5mm)	3	3000
NSI6622NA-DSWR	5.7	6V	-40 to 125℃	10.3X7.5X2.65	SOW16	2	1000
NSI6622NA-DSWKR	5.7	6V	-40 to 125℃	10.3X7.5X2.65	SOW14	2	1000
NSI6622NA-DSPNR	3.0	6V	-40 to 125℃	9.9X3.9X1.75	SOP16	2	2500
NSI6622NA-DSPOR	3.0	6V	-40 to 125℃	9.9X3.9X1.75	SOP14	2	2500
NSI6622NB-DLAR	2.5	8V	-40 to 125℃	5X5X0.91	LGA13(5x5mm)	3	3000
NSI6622NB-DSWR	5.7	8V	-40 to 125℃	10.3X7.5X2.65	SOW16	2	1000
NSI6622NB-DSWKR	5.7	8V	-40 to 125℃	10.3X7.5X2.65	SOW14	2	1000
NSI6622NB-DSPNR	3.0	8V	-40 to 125℃	9.9X3.9X1.75	SOP16	2	2500
NSI6622NB-DSPOR	3.0	8V	-40 to 125℃	9.9X3.9X1.75	SOP14	2	2500
NSI6622NC-DLAR	2.5	13V	-40 to 125℃	5X5X0.91	LGA13(5x5mm)	3	3000
NSI6622NC-DSWR	5.7	13V	-40 to 125℃	10.3X7.5X2.65	SOW16	2	1000
NSI6622NC-DSWKR	5.7	13V	-40 to 125℃	10.3X7.5X2.65	SOW14	2	1000
NSI6622NC-DSPNR	3.0	13V	-40 to 125℃	9.9X3.9X1.75	SOP16	2	2500
NSI6622NC-DSPOR	3.0	13V	-40 to 125℃	9.9X3.9X1.75	SOP14	2	2500
NSI6622ND-DLAR	2.5	4V	-40 to 125℃	5X5X0.91	LGA13(5x5mm)	3	3000
NSI6622ND-DSWR	5.7	4V	-40 to 125℃	10.3X7.5X2.65	SOW16	2	1000
NSI6622ND-DSWKR	5.7	4V	-40 to 125℃	10.3X7.5X2.65	SOW14	2	1000
NSI6622ND-DSPNR	3.0	4V	-40 to 125℃	9.9X3.9X1.75	SOP16	2	2500
NSI6622ND-DSPOR	3.0	4V	-40 to 125℃	9.9X3.9X1.75	SOP14	2	2500
NSI6622VA-DLAR	2.5	6V	-40 to 125℃	5X5X0.91	LGA13(5x5mm)	3	3000
NSI6622VA-DSWR	5.7	6V	-40 to 125℃	10.3X7.5X2.65	SOW16	2	1000
NSI6622VA-DSWKR	5.7	6V	-40 to 125℃	10.3X7.5X2.65	SOW14	2	1000
NSI6622VA-DSPNR	3.0	6V	-40 to 125℃	9.9X3.9X1.75	SOP16	2	2500
NSI6622VA-DSPOR	3.0	6V	-40 to 125℃	9.9X3.9X1.75	SOP14	2	2500
NSI6622VB-DLAR	2.5	8V	-40 to 125℃	5X5X0.91	LGA13(5x5mm)	3	3000
NSI6622VB-DSWR	5.7	8V	-40 to 125℃	10.3X7.5X2.65	SOW16	2	1000
NSI6622VB-DSWKR	5.7	8V	-40 to 125℃	10.3X7.5X2.65	SOW14	2	1000
NSI6622VB-DSPNR	3.0	8V	-40 to 125℃	9.9X3.9X1.75	SOP16	2	2500
NSI6622VB-DSPOR	3.0	8V	-40 to 125℃	9.9X3.9X1.75	SOP14	2	2500
NSI6622VC-DLAR	2.5	13V	-40 to 125℃	5X5X0.91	LGA13(5x5mm)	3	3000
NSI6622VC-DSWR	5.7	13V	-40 to 125℃	10.3X7.5X2.65	SOW16	2	1000
NSI6622VC-DSWKR	5.7	13V	-40 to 125℃	10.3X7.5X2.65	SOW14	2	1000

Copyright © 2023, NOVOSENSE

NSI6622VC-DSPNR	3.0	13V	-40 to 125℃	9.9X3.9X1.75	SOP16	2	2500
NSI6622VC-DSPOR	3.0	13V	-40 to 125℃	9.9X3.9X1.75	SOP14	2	2500
NSI6622VD-DLAR	2.5	4V	-40 to 125℃	5X5X0.91	LGA13(5x5mm)	3	3000
NSI6622VD-DSWR	5.7	4V	-40 to 125℃	10.3X7.5X2.65	SOW16	2	1000
NSI6622VD-DSWKR	5.7	4V	-40 to 125℃	10.3X7.5X2.65	SOW14	2	1000
NSI6622VD-DSPNR	3.0	4V	-40 to 125℃	9.9X3.9X1.75	SOP16	2	2500
NSI6622VD-DSPOR	3.0	4V	-40 to 125℃	9.9X3.9X1.75	SOP14	2	2500

Copyright © 2023, NOVOSENSE

12. Tape and Reel Information

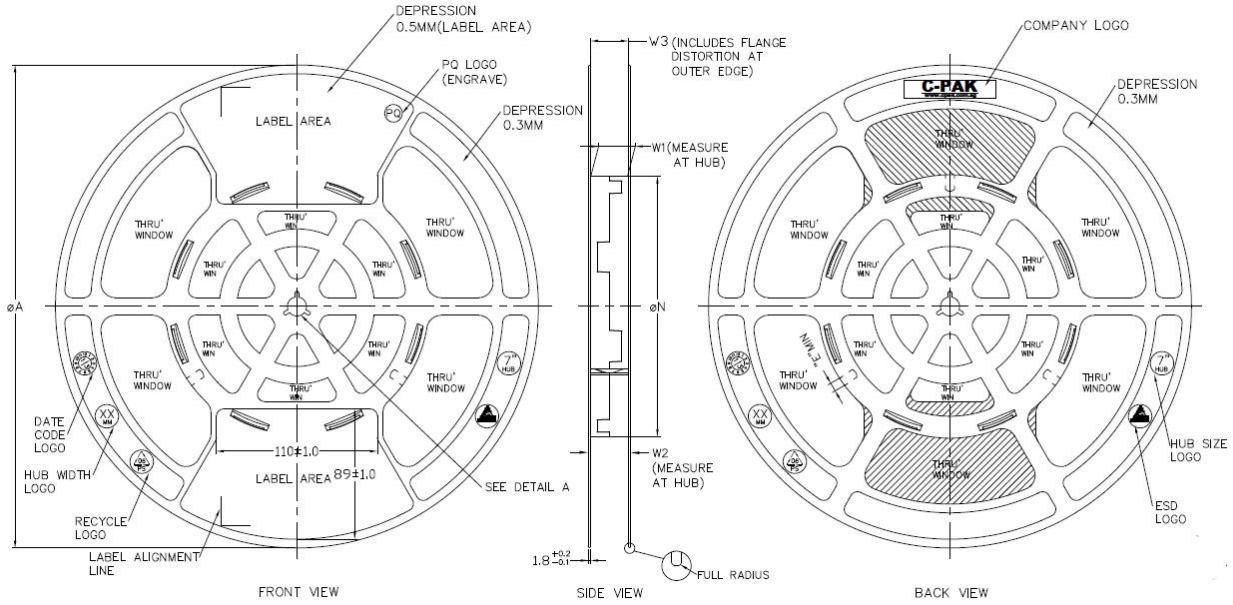

Figure 12.1 Tape Information

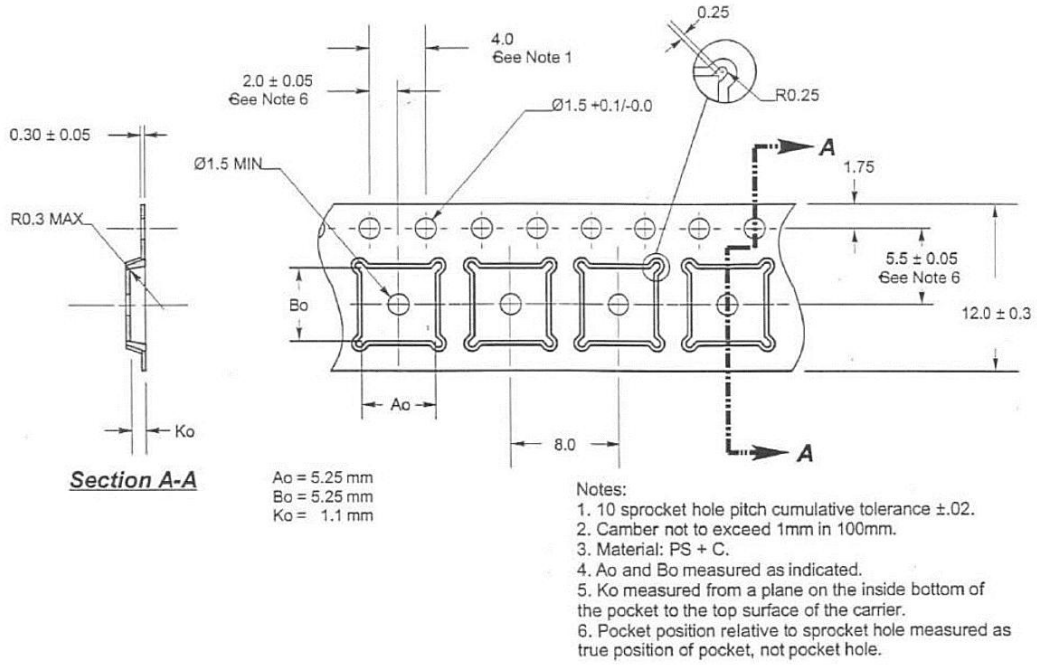

Figure 12.2 LGA13 Reel Information

Copyright © 2023, NOVOSENSE

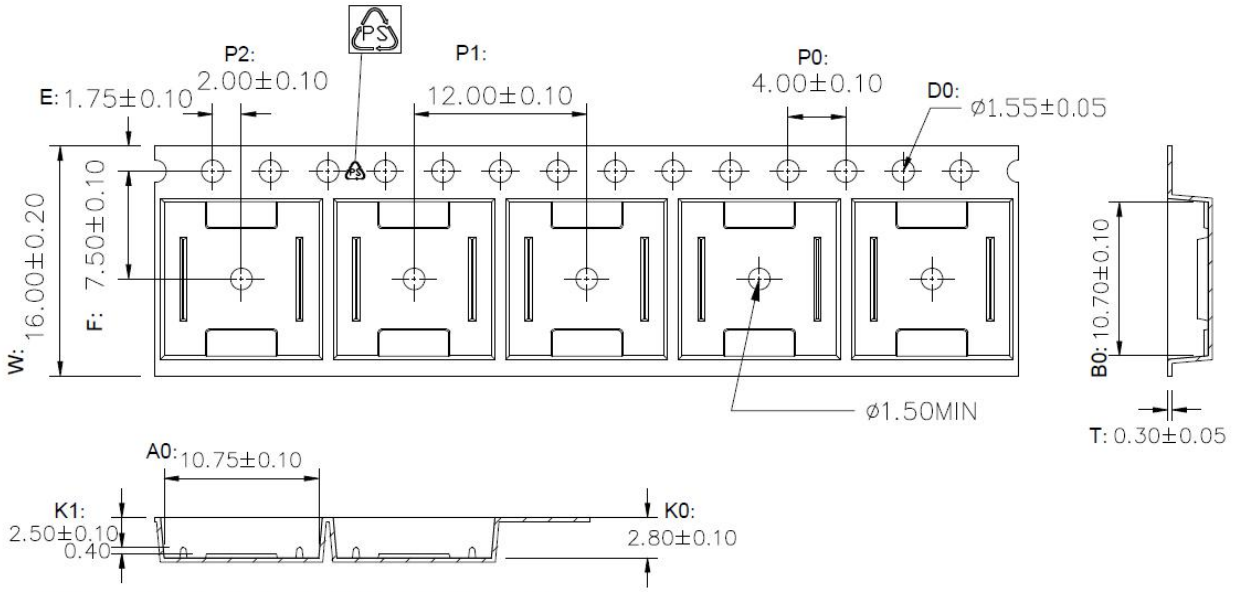

1. 10 sprocket hole pitch cumulative tolerance ±0.20 .
2. Carrier camber is within 1 mm in 250 mm.
3. Material : Black Conductive Polystyrene Alloy .
4. All dimensions meet EIA-481 requirements.
5. Thickness : 0.30±0.05mm.
6. Packing length per 22" reel : 378 Meters.(N=122)
7. Component load per 13" reel : 1000 pcs.

Figure 12.3 SOW16/SOW14 Reel Information

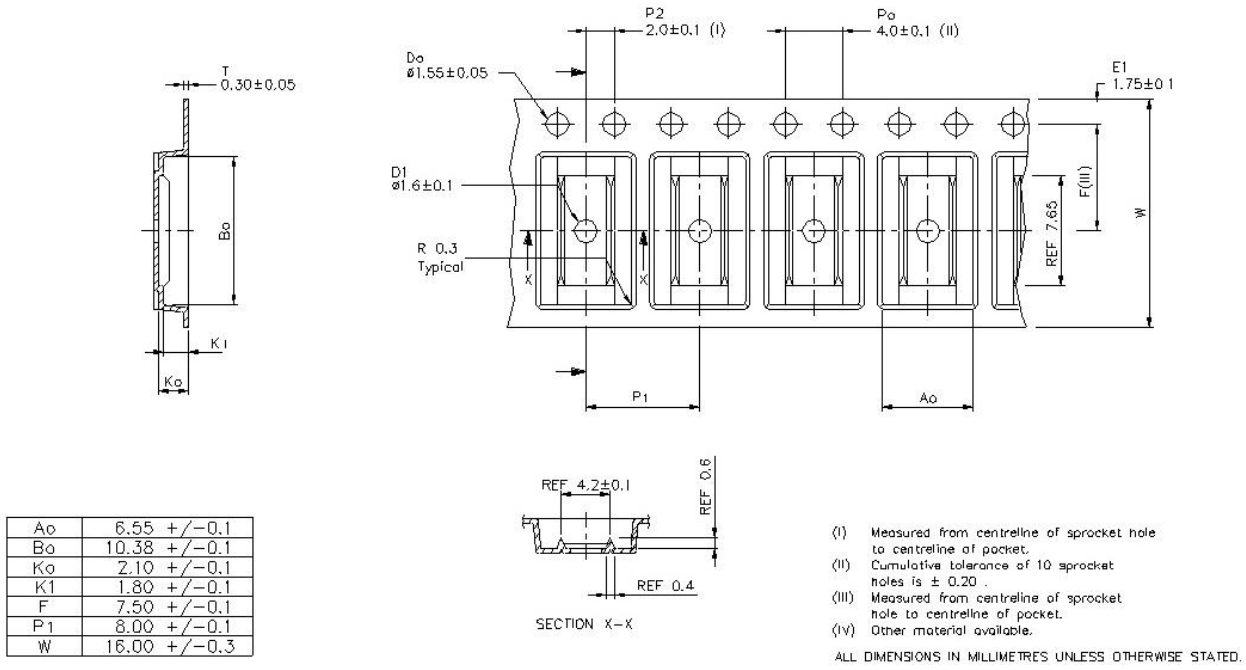

Ao	6.55 +/−0.1
Bo	10.38 +/−0.1
Ko	2.10 +/−0.1
K1	1.80 +/−0.1
F	7.50 +/−0.1
P1	8.00 +/−0.1
W	16.00 +/−0.3

Figure 12.4 SOP16/SOP14 Reel Information

Copyright © 2023, NOVOSENSE

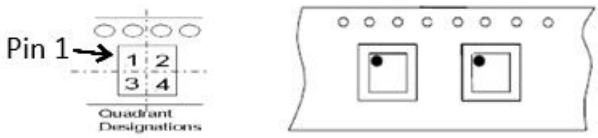

Figure 12.5 Quadrant Designation for Pin1 Orientation in Tape

13. Revision History

Revision	Description	Date
1.0	Initial version	2023/7/10

Copyright © 2023, NOVOSENSE

IMPORTANT NOTICE

The information given in this document shall in no event be regarded as any warranty or authorization of, express or implied, including but not limited to accuracy, completeness, merchantability, fitness for a particular purpose or infringement of any third party's intellectual property rights.

You are solely responsible for your use of Novosense' products and applications, and for the safety thereof. You shall comply with all laws, regulations and requirements related to Novosense's products and applications, although information or support related to any application may still be provided by Novosense.

The resources are intended only for skilled developers designing with Novosense' products. Novosense reserves the rights to make corrections, modifications, enhancements, improvements or other changes to the products and services provided. Novosense authorizes you to use these resources exclusively for the development of relevant applications designed to integrate Novosense's products. Using these resources for any other purpose, or any unauthorized reproduction or display of these resources is strictly prohibited. Novosense shall not be liable for any claims, damages, costs, losses or liabilities arising out of the use of these resources.

For further information on applications, products and technologies, please contact Novosense (www.novosns.com).

Suzhou Novosense Microelectronics Co., Ltd

Copyright © 2023, NOVOSENSE