General Description

The GreenMOS® high voltage MOSFET utilizes charge balance technology to achieve outstanding low on-resistance and lower gate charge. It is engineered to minimize conduction loss, provide superior switching performance and robust avalanche capability.

The GreenMOS® Generic series is optimized for extreme switching performance to minimize switching loss. It is tailored for high power density applications to meet the highest efficiency standards.

Features

GreenMOS®

RoHS compliant

- Low $R_{DS(ON)}$ & FOM
- Extremely low switching loss
- Excellent stability and uniformity
- EMI and performance balanced

Applications

- LED lighting
- Charger
- Adapter
- TV power
- Telecom power
- Server power
- Solar/UPS

Key Performance Parameters

Parameter	Value	Unit
$V_{DS,\ min}$ @ $T_{j(max)}$	700	V
$I_{D,\ pulse}$	13.5	A
$R_{DS(ON),\ max}$ @ V_{GS}=10V	1.2	Ω
Q_g	7	nC

Marking Information

Product Name	Package	Marking
OSG07N65AF	TO251	OSG07N65A

Package & Pin Information



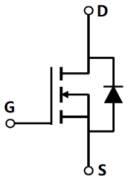

Oriental Semiconductor © Copyright Reserved V2.0

Absolute Maximum Ratings at T_j=25°C unless otherwise noted

Parameter	Symbol	Value	Unit
Drain-source voltage	V_{DS}	650	V
Gate-source voltage	V_{GS}	±30	V
Continuous drain current[1], T_C=25 °C	I_D	4.5	A
Continuous drain current[1], T_C=100 °C		2.8	
Pulsed drain current[2], T_C=25 °C	$I_{D,\ pulse}$	13.5	A
Continuous diode forward current[1], T_C=25 °C	I_S	4.5	A
Diode pulsed current[2], T_C=25 °C	$I_{S,\ pulse}$	13.5	A
Power dissipation[3] , T_C=25 °C	P_D	28.4	W
Single pulsed avalanche energy[4]	E_{AS}	100	mJ
MOSFET dv/dt ruggedness, V_{DS}=0…480 V	dv/dt	50	V/ns
Reverse diode dv/dt, V_{DS}=0…480 V, I_{SD}≤I_D	dv/dt	15	V/ns
Operation and storage temperature	T_{stg}, T_j	-55 to 150	°C

Thermal Characteristics

Parameter	Symbol	Value	Unit
Thermal resistance, junction-case	$R_{\theta JC}$	4.4	°C/W
Thermal resistance, junction-ambient[4]	$R_{\theta JA}$	62	°C/W

Electrical Characteristics at T_j=25°C unless otherwise specified

Parameter	Symbol	Min.	Typ.	Max.	Unit	Test condition
Drain-source breakdown voltage	BV_{DSS}	650			V	V_{GS}=0 V, I_D=250 μA
Gate threshold voltage	$V_{GS(th)}$	2.9		3.9	V	V_{DS}=V_{GS}, I_D=250 μA
Drain-source on-state resistance	$R_{DS(ON)}$		1	1.2	Ω	V_{GS}=10 V, I_D=2 A
			2.7			V_{GS}=10 V, I_D=2 A, T_j=150 °C
Gate-source leakage current	I_{GSS}			100	nA	V_{GS}=30 V
				-100		V_{GS}=-30 V
Drain-source leakage current	I_{DSS}			1	μA	V_{DS}=650 V, V_{GS}=0 V

Oriental Semiconductor © Copyright Reserved V2.0

Dynamic Characteristics

Parameter	Symbol	Min.	Typ.	Max.	Unit	Test condition
Input capacitance	C_{iss}		260.7		pF	V_{GS}=0 V, V_{DS}=50 V, f=100 KHz
Output capacitance	C_{oss}		24.1		pF	
Reverse transfer capacitance	C_{rss}		1.2		pF	
Turn-on delay time	$t_{d(on)}$		29.8		ns	V_{GS}=10 V, V_{DS}=400 V, R_G=2 Ω, I_D=2 A
Rise time	t_r		17.8		ns	
Turn-off delay time	$t_{d(off)}$		60.3		ns	
Fall time	t_f		14.9		ns	

Gate Charge Characteristics

Parameter	Symbol	Min.	Typ.	Max.	Unit	Test condition
Total gate charge	Q_g		6.7		nC	V_{GS}=10 V, V_{DS}=400 V, I_D=2 A
Gate-source charge	Q_{gs}		1.5		nC	
Gate-drain charge	Q_{gd}		3.2		nC	
Gate plateau voltage	$V_{plateau}$		5.8		V	

Body Diode Characteristics

Parameter	Symbol	Min.	Typ.	Max.	Unit	Test condition
Diode forward voltage	V_{SD}			1.3	V	I_S=4.5 A, V_{GS}=0 V
Reverse recovery time	t_{rr}		130		ns	V_R=400 V, I_S=2 A, di/dt=100 A/μs
Reverse recovery charge	Q_{rr}		0.92		μC	
Peak reverse recovery current	I_{rrm}		14.7		A	

Note

1) Calculated continuous current based on maximum allowable junction temperature.
2) Repetitive rating; pulse width limited by max. junction temperature.
3) Pd is based on max. junction temperature, using junction-case thermal resistance.
4) V_{DD}=100 V, V_{GS}=10 V, L=60 mH, starting T_j=25 °C.

Oriental Semiconductor © Copyright Reserved V2.0

Electrical Characteristics Diagrams

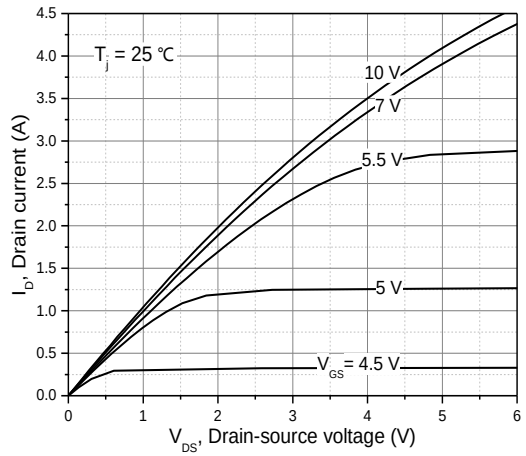

Figure 1. Typ. output characteristics

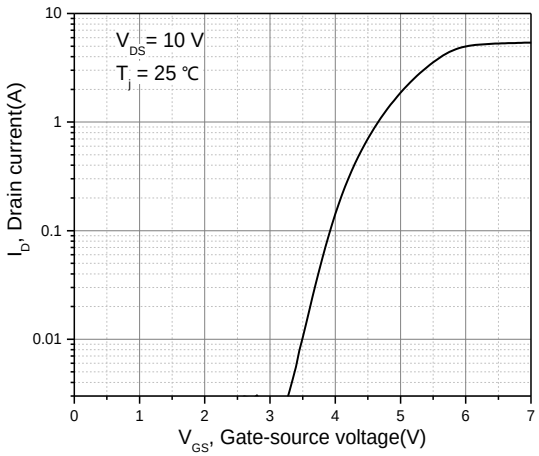

Figure 2. Typ. transfer characteristics

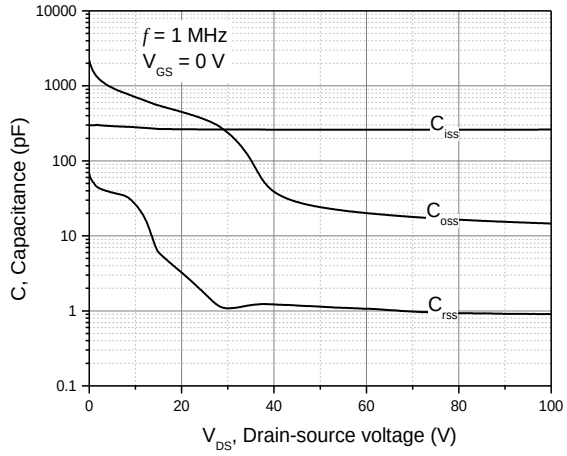

Figure 3. Typ. capacitances

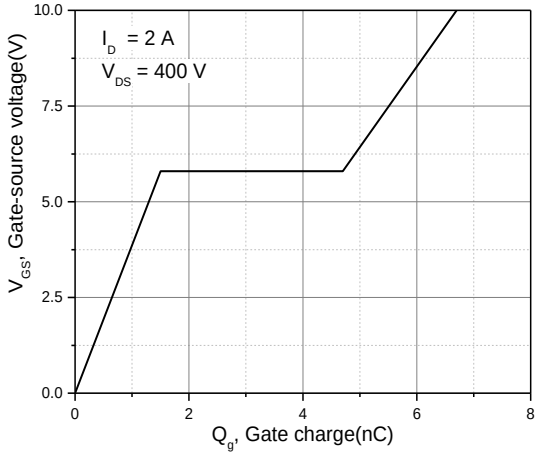

Figure 4. Typ. gate charge

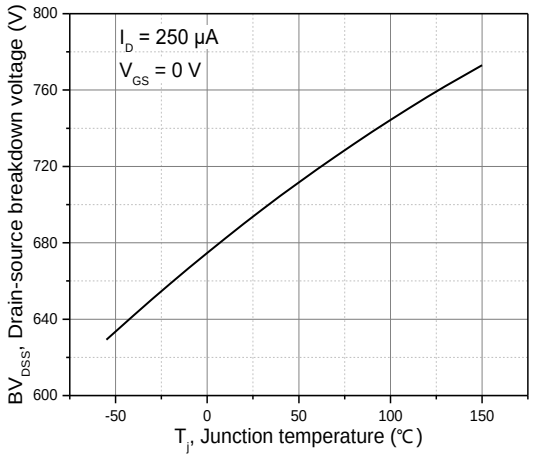

Figure 5. Drain-source breakdown voltage

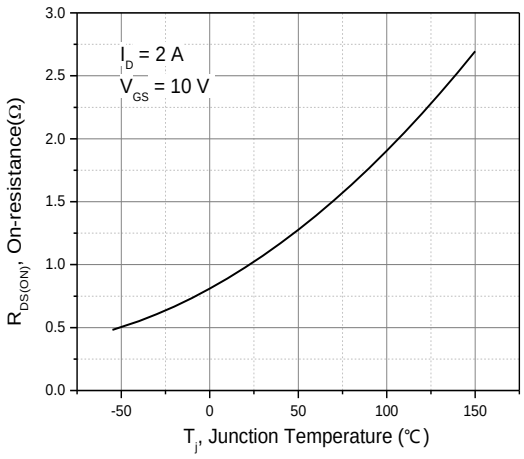

Figure 6. Drain-source on-state resistance

Oriental Semiconductor © Copyright Reserved V2.0

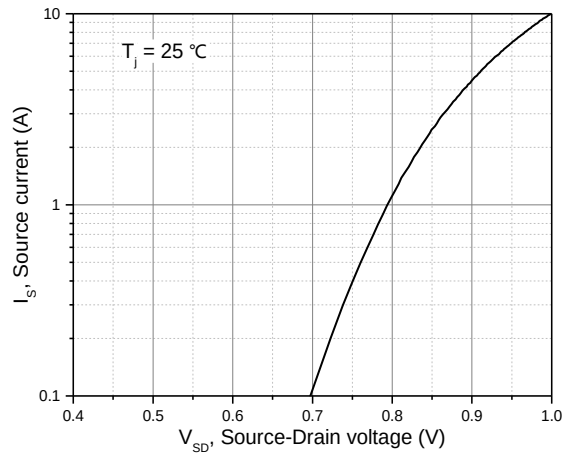

Figure 7. Forward characteristic of body diode

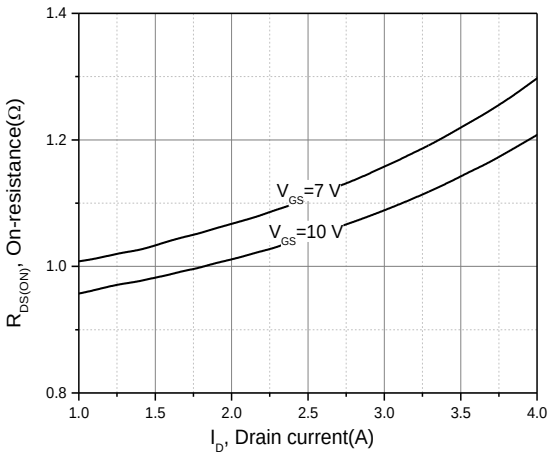

Figure 8. Drain-source on-state resistance

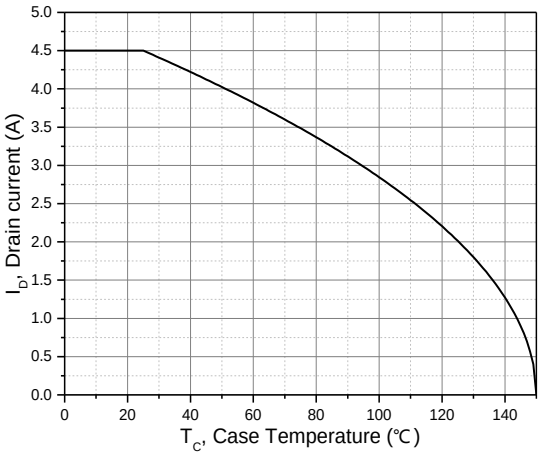

Figure 9. Drain current

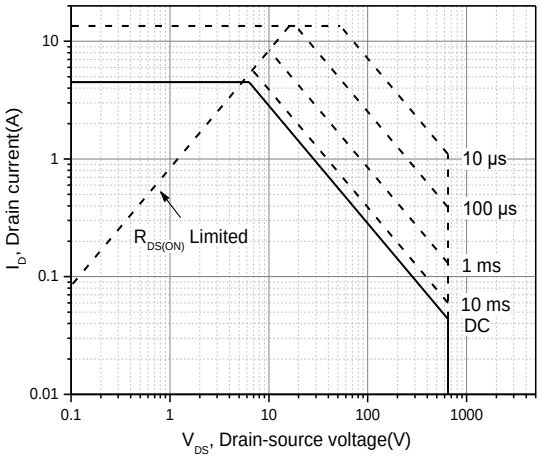

Figure 10. Safe operation area for TC=25 °C

Oriental Semiconductor © Copyright Reserved V2.0

Test circuits and waveforms

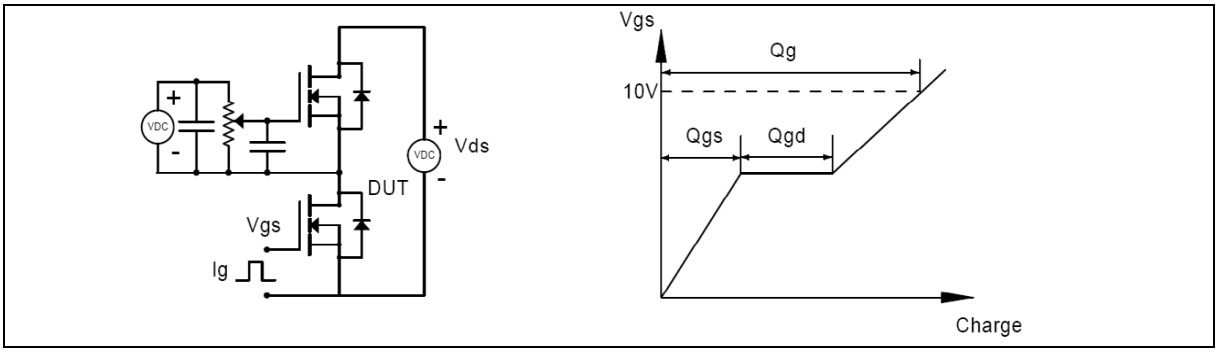

Figure 1. Gate charge test circuit & waveform

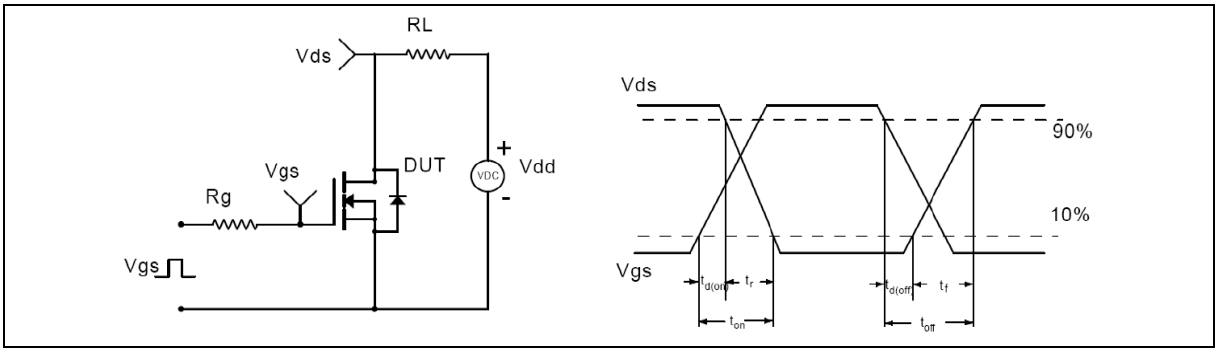

Figure 2. Switching time test circuit & waveforms

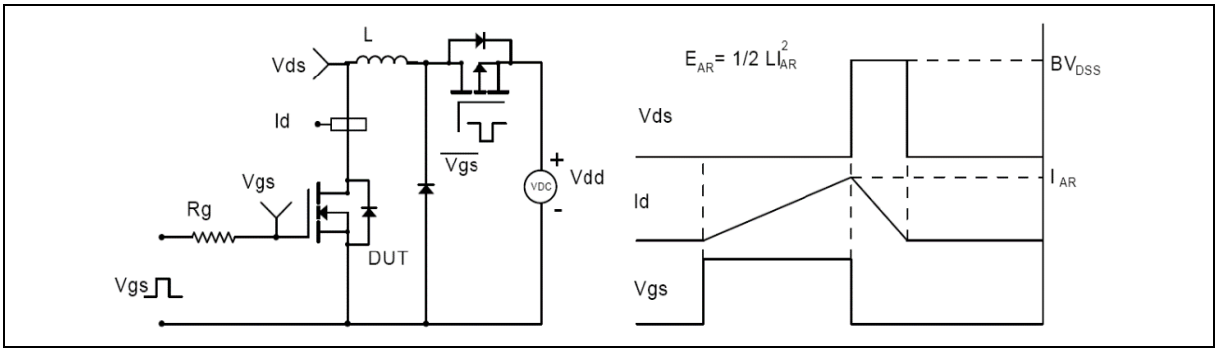

Figure 3. Unclamped inductive switching (UIS) test circuit & waveforms

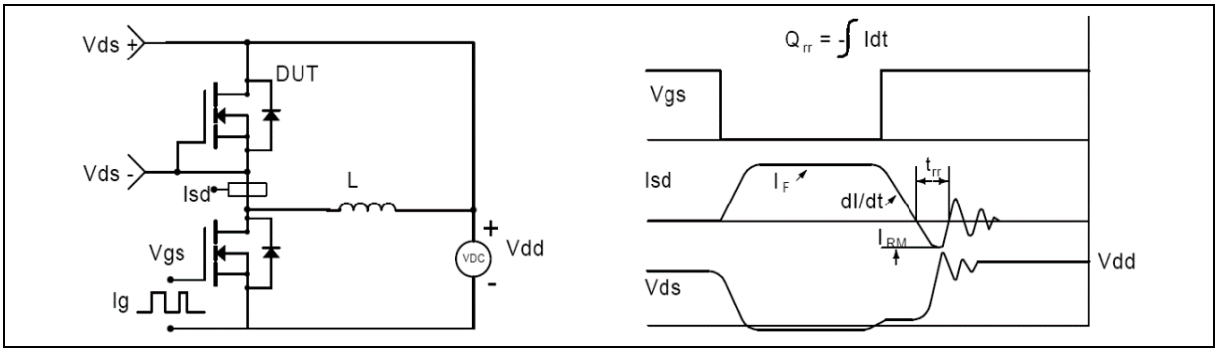

Figure 4. Diode reverse recovery test circuit & waveforms

Oriental Semiconductor © Copyright Reserved V2.0

Package Information

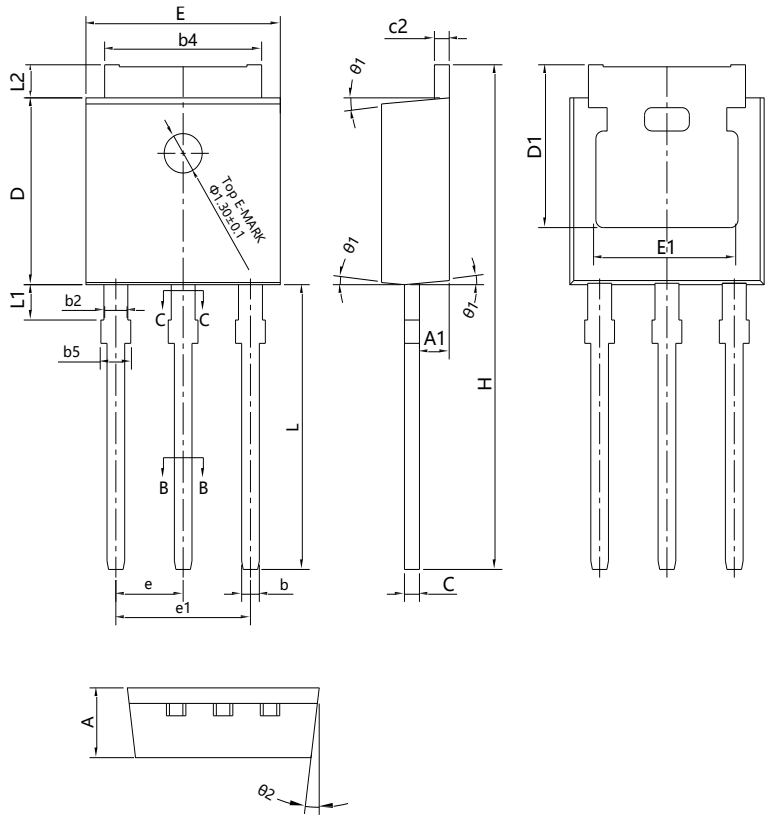

Symbol	mm		
	Min	Nom	Max
A	2.20	2.30	2.35
A1	0.90	1.01	1.10
b	0.56	-	0.69
b1	0.55	0.60	0.65
b2	0.77	-	0.90
b3	0.76	0.81	0.86
b4	5.23	5.33	5.43
b5	-	-	1.05
c	0.46	-	0.59
c1	0.45	0.51	0.55
c2	0.46	-	0.59
D	6.00	6.10	6.20
D1	5.20	-	-
E	6.50	6.60	6.70
E1	4.60	4.83	5.00
e	2.24	2.29	2.34
e1	4.47	4.57	4.67
H	16.18	16.48	16.78
L	9.00	9.30	9.60
L1	0.95	1.16	1.35
L2	0.90	1.08	1.25
θ1	3°	5°	7°
θ2	1°	3°	5°

Version 1: TO251-J package outline dimension

Oriental Semiconductor © Copyright Reserved V2.0

Ordering Information

Package Type	Units/ Reel	Reels / Inner Box	Units/ Inner Box	Inner Box/ Carton Box	Units/ Carton Box
TO251-J	75	60	4500	5	22500

Product Information

Product	Package	Pb Free	RoHS	Halogen Free
OSG07N65AF	TO251	yes	yes	yes

Legal Disclaimer

The information given in this document shall in no event be regarded as a guarantee of conditions or characteristics. With respect to any examples or hints given herein, any typical values stated herein and/or any information regarding the application of the device, Oriental Semiconductor hereby disclaims any and all warranties and liabilities of any kind, including without limitation, warranties of non-infringement of intellectual property rights of any third party.

For further information on technology, delivery terms and conditions and prices, please contact the Oriental Semiconductor sales representatives (www.orientalsemi.com).

© Oriental Semiconductor Co.,Ltd. All Rights Reserved

ORIENTAL SEMICONDUCTOR

A Power Semiconductor Innovator