General Description

The GreenMOS® high voltage MOSFET utilizes charge balance technology to achieve outstanding low on-resistance and lower gate charge. It is engineered to minimize conduction loss, provide superior switching performance and robust avalanche capability.

The GreenMOS® Generic series is optimized for extreme switching performance to minimize switching loss. It is tailored for high power density applications to meet the highest efficiency standards.

Features

- Low $R_{DS(ON)}$ & FOM
- Extremely low switching loss
- Excellent stability and uniformity

Applications

- LED lighting
- Telecom
- Adapter
- Sever
- Solar/UPS

Key Performance Parameters

Parameter	Value	Unit
V_{DS}	600	V
$I_{D, pulse}$	348	A
$R_{DS(ON), max}$ @ V_{GS}=10V	17	mΩ
Q_g	238	nC
PD	680	W

Marking Information

Product Name	Package	Marking
OSG60R017HT3F	TO247	OSG60R017HT3

Package & Pin Information



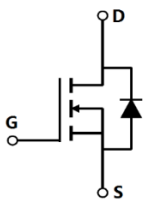

Oriental Semiconductor © Copyright Reserved V1.0

Absolute Maximum Ratings at T_j=25°C unless otherwise noted

Parameter	Symbol	Value	Unit
Drain-source voltage	V_{DS}	600	V
Gate-source voltage (static)	V_{GS}	±20	V
Gate-source voltage (dynamic)		±30	V
Continuous drain current[1], T_C=25 °C	I_D	116	A
Continuous drain current[1], T_C=100 °C		73.4	
Pulsed drain current[2], T_C=25 °C	$I_{D,\ pulse}$	348	A
Continuous diode forward current[1], T_C=25 °C	I_S	116	A
Diode pulsed current[2], T_C=25 °C	$I_{S,\ pulse}$	348	A
Power dissipation[3], T_C=25 °C	P_D	680	W
Single pulsed avalanche energy[4]	E_{AS}	2250	mJ
MOSFET dv/dt ruggedness, V_{DS}=0…400 V	dv/dt	100	V/ns
Reverse diode dv/dt, V_{DS}=0…400 V, I_{SD}≤I_D	dv/dt	15	V/ns
Operation and storage temperature	T_{stg}, T_j	-55 to 150	°C

Thermal Characteristics

Parameter	Symbol	Value	Unit
Thermal resistance, junction-case	$R_{\theta JC}$	0.18	°C/W
Thermal resistance, junction-ambient	$R_{\theta JA}$	62	°C/W

Electrical Characteristics at T_j=25°C unless otherwise specified

Parameter	Symbol	Min.	Typ.	Max.	Unit	Test condition
Drain-source breakdown voltage	BV_{DSS}	600			V	V_{GS}=0 V, I_D=2 mA
Gate threshold voltage	$V_{GS(th)}$	2.9		3.9	V	V_{DS}=V_{GS}, I_D=2 mA
Drain-source on-state resistance	$R_{DS(ON)}$		14.6	17	mΩ	V_{GS}=10 V, I_D=58 A
			37			V_{GS}=10 V, I_D=58 A, T_j=150 °C
Gate-source leakage current	I_{GSS}			100	nA	V_{GS}=20 V
				-100		V_{GS}=-20 V
Drain-source leakage current	I_{DSS}			1	μA	V_{DS}=600 V, V_{GS}=0 V
Gate resistance	R_G		1		Ω	f=1 MHz, Open drain

Oriental Semiconductor © Copyright Reserved V1.0

Dynamic Characteristics

Parameter	Symbol	Min.	Typ.	Max.	Unit	Test condition
Input capacitance	C_{iss}		11270		pF	V_{GS}=0 V, V_{DS}=50 V, f=100 kHz
Output capacitance	C_{oss}		590		pF	
Reverse transfer capacitance	C_{rss}		5.4		pF	
Effective output capacitance, energy related	$C_{o(er)}$		375		pF	V_{GS}=0 V, V_{DS}=0 V-400 V
Effective output capacitance, time related	$C_{o(tr)}$		2220		pF	
Turn-on delay time	$t_{d(on)}$		36.4		ns	V_{GS}=10 V, V_{DS}=400 V, R_G=2 Ω, I_D=40 A
Rise time	t_r		12		ns	
Turn-off delay time	$t_{d(off)}$		120		ns	
Fall time	t_f		2.8		ns	

Gate Charge Characteristics

Parameter	Symbol	Min.	Typ.	Max.	Unit	Test condition
Total gate charge	Q_g		238		nC	V_{GS}=10 V, V_{DS}=400 V, I_D=40 A
Gate-source charge	Q_{gs}		52		nC	
Gate-drain charge	Q_{gd}		86		nC	
Gate plateau voltage	$V_{plateau}$		5.4		V	

Body Diode Characteristics

Parameter	Symbol	Min.	Typ.	Max.	Unit	Test condition
Diode forward voltage	V_{SD}			1.3	V	I_S=116 A, V_{GS}=0 V
Reverse recovery time	t_{rr}		496		ns	V_R=400 V, I_S=40 A, di/dt=100 A/μs
Reverse recovery charge	Q_{rr}		9.5		μC	
Peak reverse recovery current	I_{rrm}		33		A	

Note

1) Calculated continuous current based on maximum allowable junction temperature.
2) Repetitive rating; pulse width limited by max. junction temperature.
3) Pd is based on max. junction temperature, using junction-case thermal resistance.
4) V_{DD}=100 V, V_{GS}=10 V, L=80 mH, starting T_j=25 °C.

Oriental Semiconductor © Copyright Reserved V1.0

Electrical Characteristics Diagrams

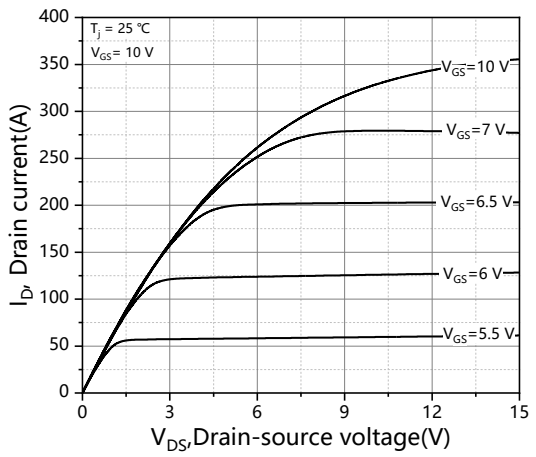

Figure 1. Typ. output characteristics T_j=25℃

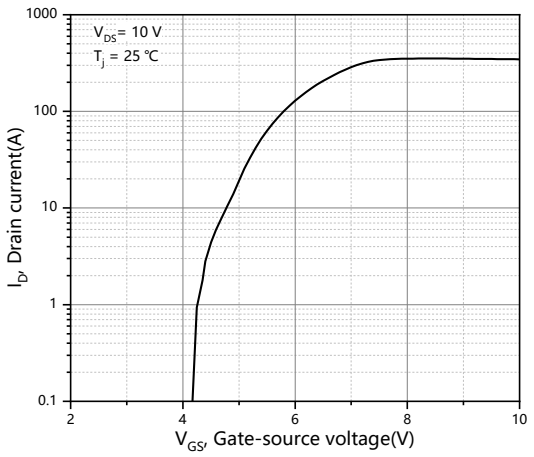

Figure 2. Typ. transfer characteristics

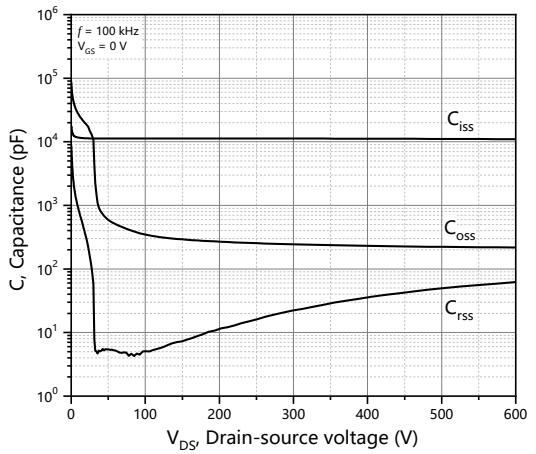

Figure 3. Typ. capacitances

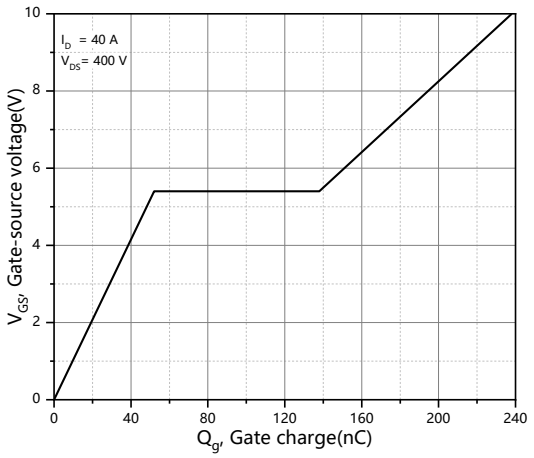

Figure 4. Typ. gate charge

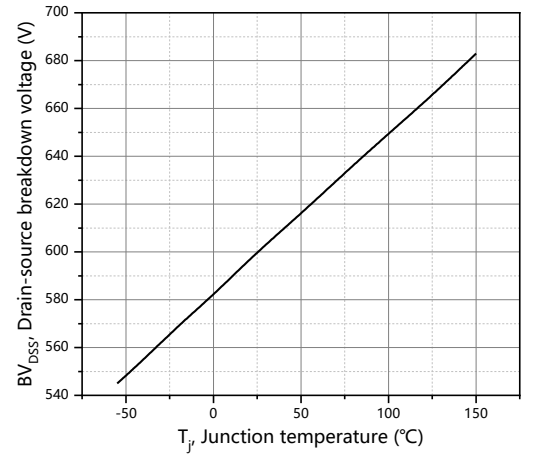

Figure 5. Drain-source breakdown voltage

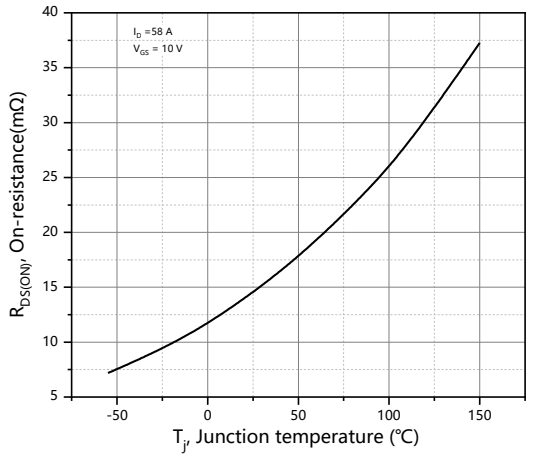

Figure 6. Drain-source on-state resistance

Oriental Semiconductor © Copyright Reserved V1.0

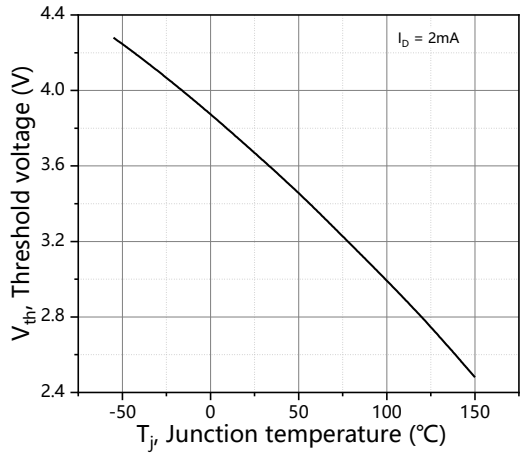

Figure 7. Threshold voltage

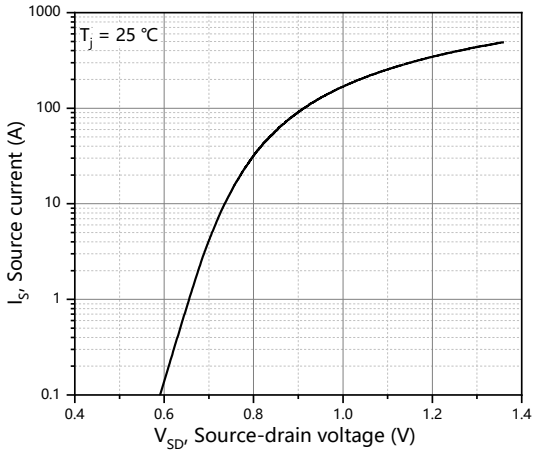

Figure 8. Forward characteristic of body diode

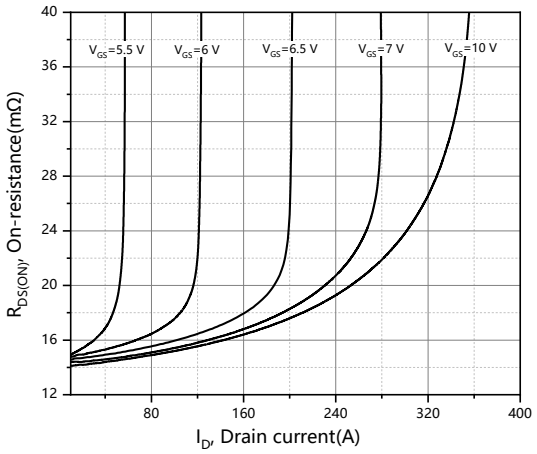

Figure 9. Drain-source on-state resistance

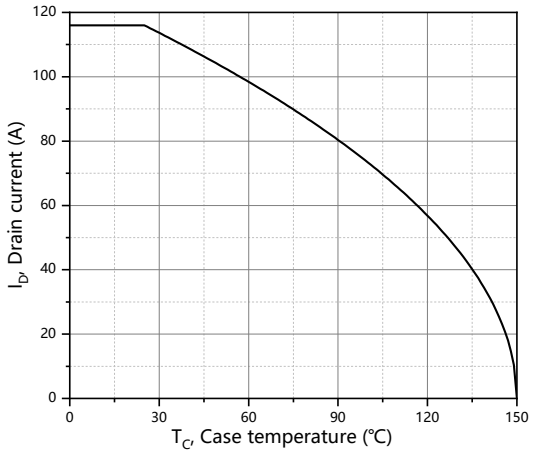

Figure 10. Drain current

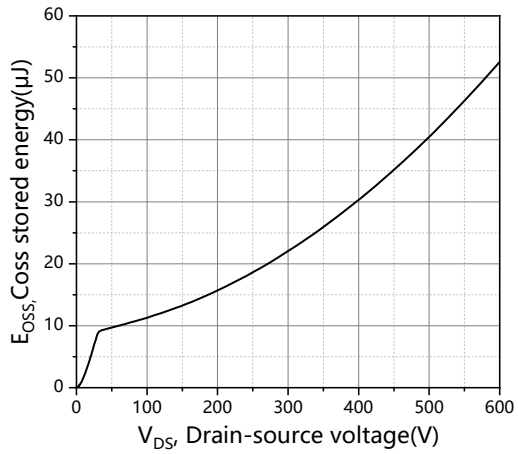

Figure 11. Typ. Coss stored energy

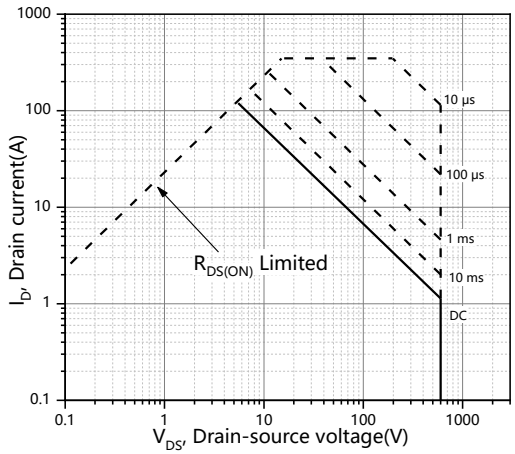

Figure 12. Safe operation area Tc=25℃

Oriental Semiconductor © Copyright Reserved V1.0

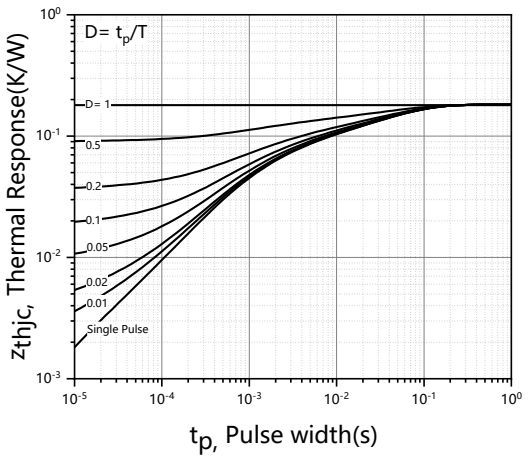

Figure 13. Max. transient thermal impedance

Oriental Semiconductor © Copyright Reserved V1.0

Test circuits and waveforms

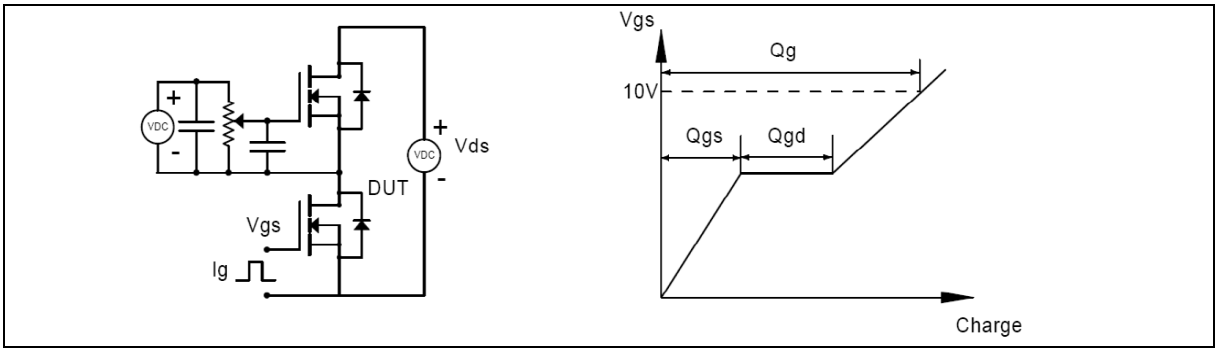

Figure 1. Gate charge test circuit & waveform

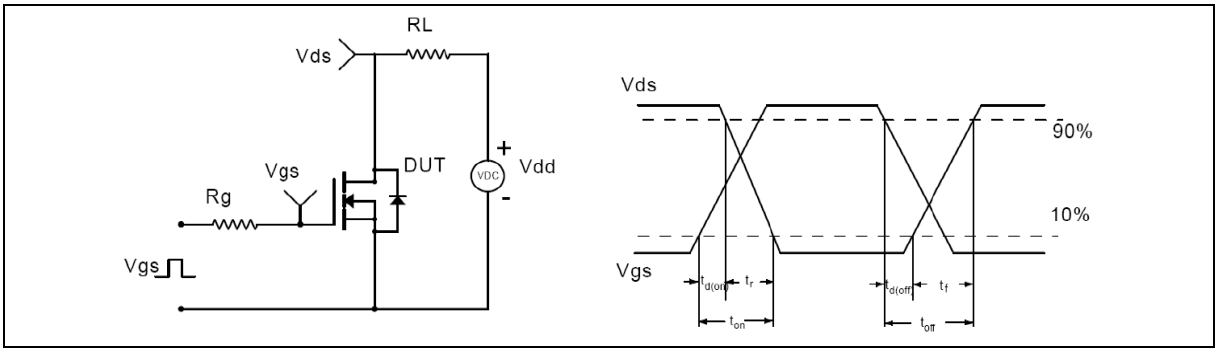

Figure 2. Switching time test circuit & waveforms

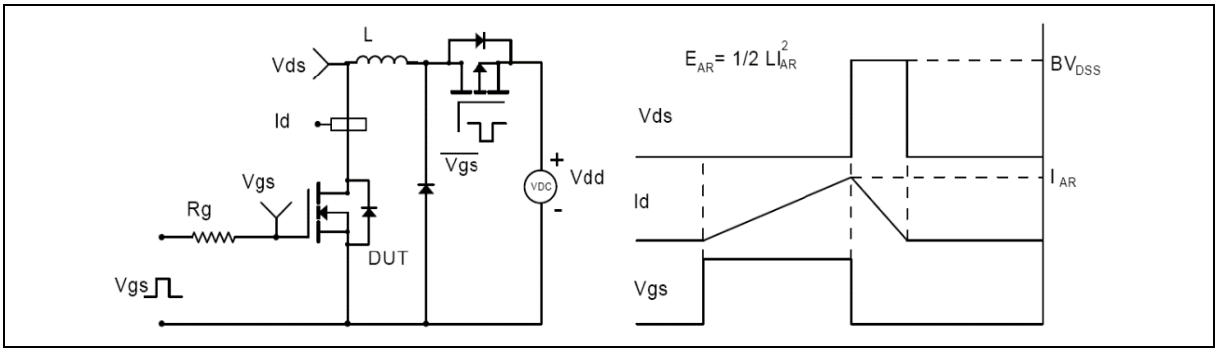

Figure 3. Unclamped inductive switching (UIS) test circuit & waveforms

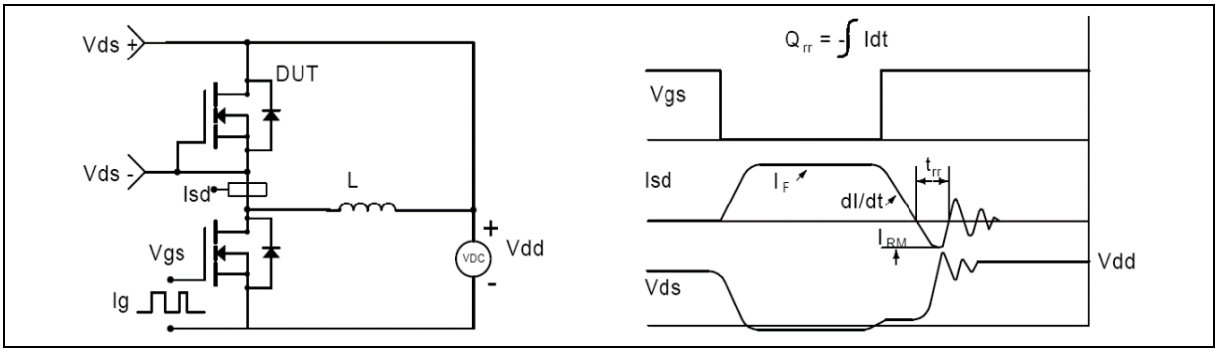

Figure 4. Diode reverse recovery test circuit & waveforms

Oriental Semiconductor © Copyright Reserved V1.0

Package Information

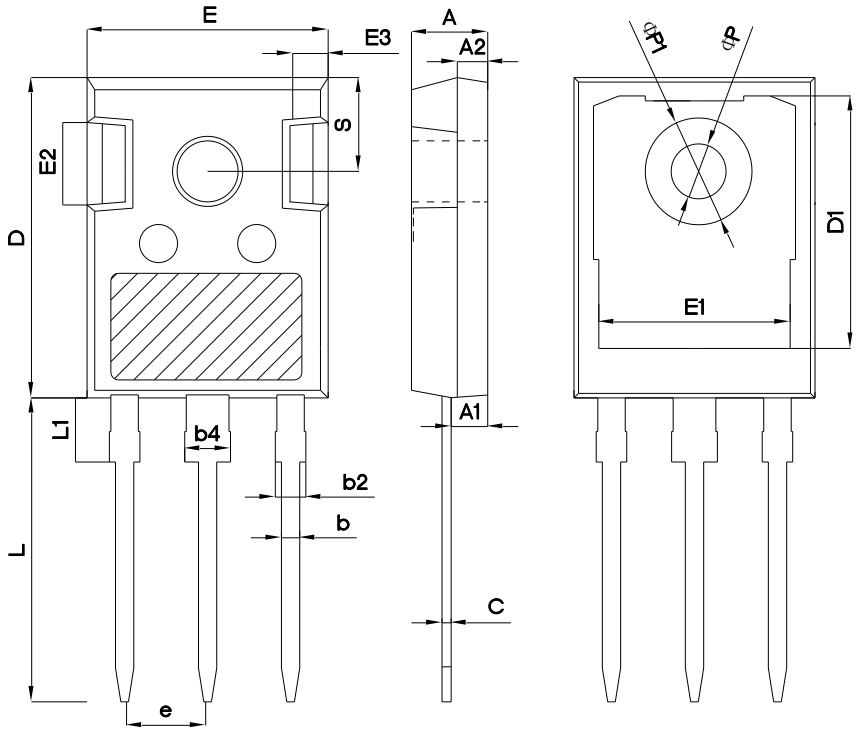

Symbol	mm		
	Min	Nom	Max
A	4.80	5.00	5.20
A1	2.21	2.41	2.59
A2	1.85	2.00	2.15
b	1.11	1.21	1.36
b2	1.91	2.01	2.21
b4	2.91	3.01	3.21
c	0.51	0.61	0.75
D	20.80	21.00	21.30
D1	16.25	16.55	16.85
E	15.50	15.80	16.10
E1	13.00	13.30	13.60
E2	4.80	5.00	5.20
E3	2.30	2.50	2.70
e	5.44 BSC		
L	19.82	19.92	20.22
L1	-	-	4.30
ΦP	3.40	3.60	3.80
ΦP1	-	-	7.30
S	6.15 BSC		

Version：TO247-P package outline dimension

Oriental Semiconductor © Copyright Reserved V1.0

Ordering Information

Package Type	Units/ Tube	Tubes/ Inner Box	Units/ Inner Box	Inner Boxes/ Carton Box	Units/ Carton Box
TO247-P	30	11	330	6	1980

Product Information

Product	Package	Pb Free	RoHS	Halogen Free
OSG60R017HT3F	TO247	yes	yes	yes

Legal Disclaimer

The information given in this document shall in no event be regarded as a guarantee of conditions or characteristics. With respect to any examples or hints given herein, any typical values stated herein and/or any information regarding the application of the device, Oriental Semiconductor hereby disclaims any and all warranties and liabilities of any kind, including without limitation, warranties of non-infringement of intellectual property rights of any third party.

For further information on technology, delivery terms and conditions and prices, please contact the Oriental Semiconductor sales representatives (www.orientalsemi.com).

© Oriental Semiconductor Co.,Ltd. All Rights Reserved

ORIENTAL SEMICONDUCTOR

A Power Semiconductor Innovator