General Description

The GreenMOS® high voltage MOSFET utilizes charge balance technology to achieve outstanding low on-resistance and lower gate charge. It is engineered to minimize conduction loss, provide superior switching performance and robust avalanche capability.

The GreenMOS® Z series is integrated with fast recovery diode (FRD) to minimize reverse recovery time. It is suitable for resonant switching topologies to reach higher efficiency, higher reliability and smaller form factor.

Features

- Low $R_{DS(ON)}$ & FOM
- Extremely low switching loss
- Excellent stability and uniformity
- Ultra-fast and robust body diode

Applications

GreenMOS®

RoHS compliant

- PC power
- Telecom power
- Server power
- EV Charger
- Motor driver

Key Performance Parameters

Parameter	Value	Unit
V_{DS}	650	V
$I_{D,\ pulse}$	240	A
$R_{DS(ON),\ max}$ @ V_{GS}=10V	31	mΩ
Q_g	175	nC

Marking Information

Product Name	Package	Marking
OSG60R031HZF	TO247	OSG60R031HZ

Package & Pin Information



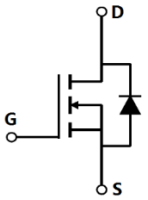

Oriental Semiconductor © Copyright Reserved V1.0

Absolute Maximum Ratings at T_j=25°C unless otherwise noted

Parameter	Symbol	Value	Unit
Drain-source voltage	V_{DS}	600	V
Gate-source voltage	V_{GS}	±30	V
Continuous drain current[1], T_C=25 °C	I_D	80	A
Continuous drain current[1], T_C=100 °C		50	
Pulsed drain current[2], T_C=25 °C	$I_{D,\ pulse}$	240	A
Continuous diode forward current[1], T_C=25 °C	I_S	80	A
Diode pulsed current[2], T_C=25 °C	$I_{S,\ pulse}$	240	A
Power dissipation[3], T_C=25 °C	P_D	480	W
Single pulsed avalanche energy[5]	E_{AS}	2500	mJ
MOSFET dv/dt ruggedness, V_{DS}=0…480 V	dv/dt	50	V/ns
Reverse diode dv/dt, V_{DS}=0…480 V, I_{SD}≤I_D	dv/dt	50	V/ns
Operation and storage temperature	T_{stg}, T_j	-55 to 150	°C

Thermal Characteristics

Parameter	Symbol	Value	Unit
Thermal resistance, junction-case	$R_{\theta JC}$	0.26	°C/W
Thermal resistance, junction-ambient[4]	$R_{\theta JA}$	62	°C/W

Electrical Characteristics at T_j=25°C unless otherwise specified

Parameter	Symbol	Min.	Typ.	Max.	Unit	Test condition
Drain-source breakdown voltage	BV_{DSS}	600			V	V_{GS}=0 V, I_D=1 mA
Gate threshold voltage	$V_{GS(th)}$	3.0		4.5	V	V_{DS}=V_{GS}, I_D=2 mA,
Drain-source on-state resistance	$R_{DS(ON)}$		0.028	0.031	Ω	V_{GS}=10 V, I_D=40 A
			0.058			V_{GS}=10 V, I_D=40 A, T_j=150 °C
Gate-source leakage current	I_{GSS}			100	nA	V_{GS}=30 V
				-100		V_{GS}=-30 V
Drain-source leakage current	I_{DSS}			10	μA	V_{DS}=600 V, V_{GS}=0 V
Gate resistance	R_G		2.1		Ω	f=1 MHz, Open drain

Oriental Semiconductor © Copyright Reserved V1.0

Dynamic Characteristics

Parameter	Symbol	Min.	Typ.	Max.	Unit	Test condition
Input capacitance	C_{iss}		8980		pF	V_{GS}=0 V, V_{DS}=50 V, f=100 KHz
Output capacitance	C_{oss}		619		pF	
Reverse transfer capacitance	C_{rss}		15		pF	
Effective output capacitance, energy related	$C_{o(er)}$		317		pF	V_{GS}=0 V, V_{DS}=0 V-400 V
Effective output capacitance, time related	$C_{o(tr)}$		1725		pF	
Turn-on delay time	$t_{d(on)}$		38		ns	V_{GS}=10 V, V_{DS}=400 V, R_G=2 Ω, I_D=40 A
Rise time	t_r		37		ns	
Turn-off delay time	$t_{d(off)}$		112		ns	
Fall time	t_f		4		ns	

Gate Charge Characteristics

Parameter	Symbol	Min.	Typ.	Max.	Unit	Test condition
Total gate charge	Q_g		175		nC	V_{GS}=10 V, V_{DS}=400 V, I_D=40 A
Gate-source charge	Q_{gs}		46		nC	
Gate-drain charge	Q_{gd}		62		nC	
Gate plateau voltage	$V_{plateau}$		6		V	

Body Diode Characteristics

Parameter	Symbol	Min.	Typ.	Max.	Unit	Test condition
Diode forward voltage	V_{SD}			1.4	V	I_S=80 A, V_{GS}=0 V
Reverse recovery time	t_{rr}		210		ns	I_S=40 A, di/dt=100 A/μs
Reverse recovery charge	Q_{rr}		2.0		μC	
Peak reverse recovery current	I_{rrm}		15.4		A	

Note

1) Calculated continuous current based on maximum allowable junction temperature.
2) Repetitive rating; pulse width limited by max. junction temperature.
3) Pd is based on max. junction temperature, using junction-case thermal resistance.
4) V_{DD}=100 V, V_{GS}=10 V, L=80 mH, starting T_j=25 °C.

Oriental Semiconductor © Copyright Reserved V1.0

Electrical Characteristics Diagrams

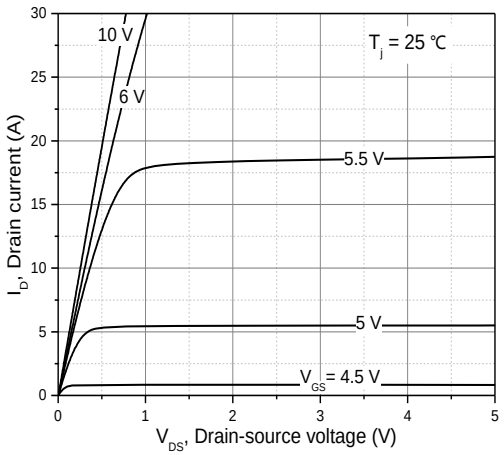

Figure 1. Typ. output characteristics

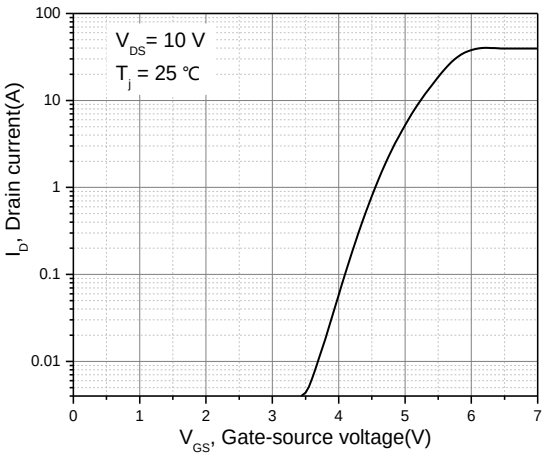

Figure 2. Typ. transfer characteristics

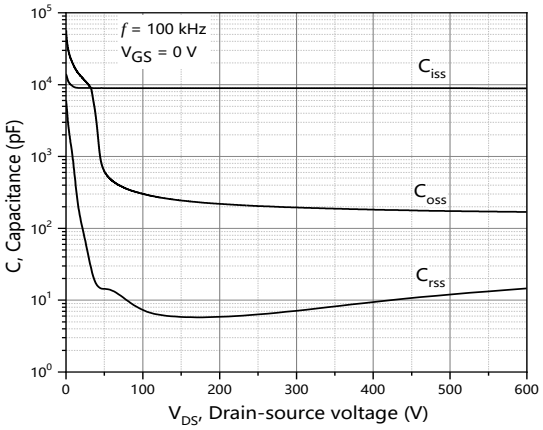

Figure 3. Typ. capacitances

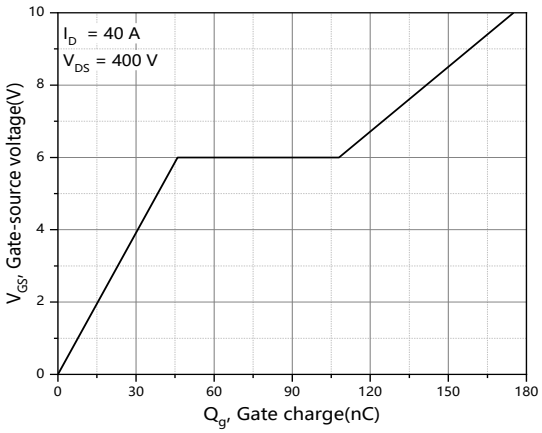

Figure 4. Typ. gate charge

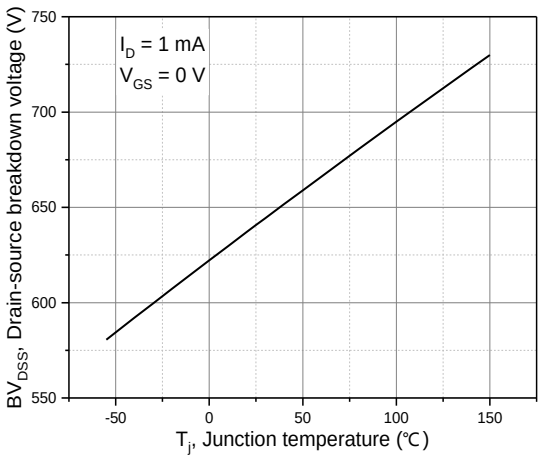

Figure 5. Drain-source breakdown voltage

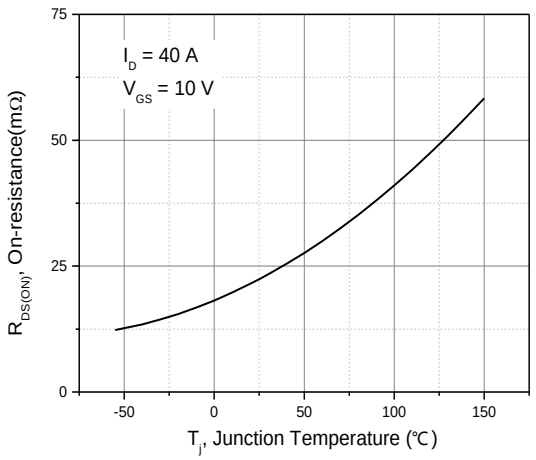

Figure 6. Drain-source on-state resistance

Oriental Semiconductor © Copyright Reserved V1.0

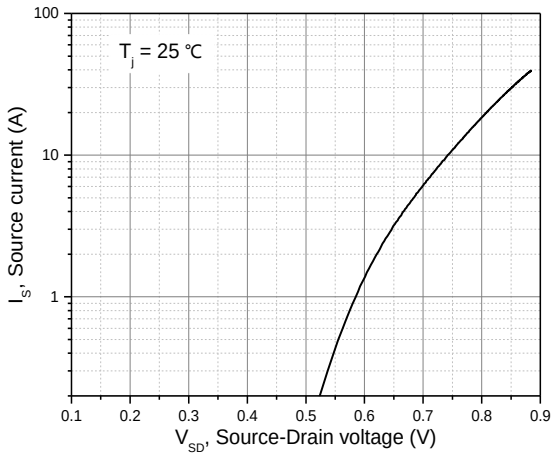

Figure 7. Forward characteristic of body diode

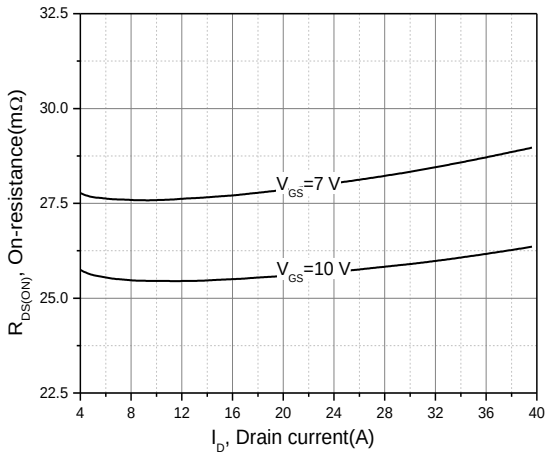

Figure 8. Drain-source on-state resistance

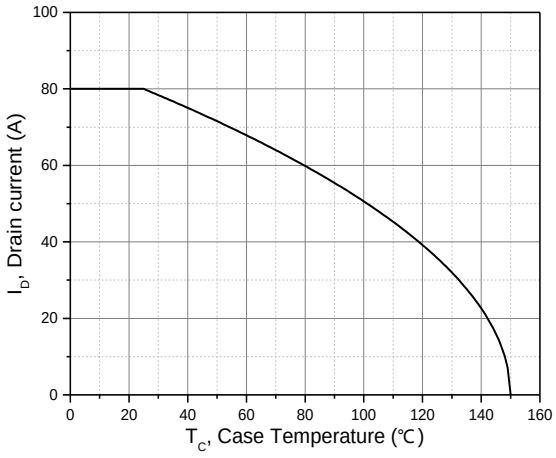

Figure 9. Drain current

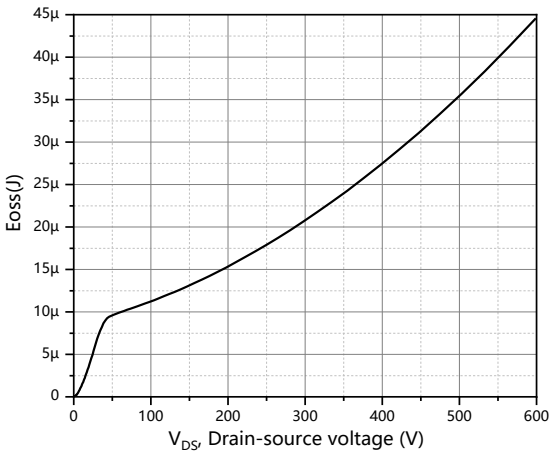

Figure 10. Typ. Coss stored energy

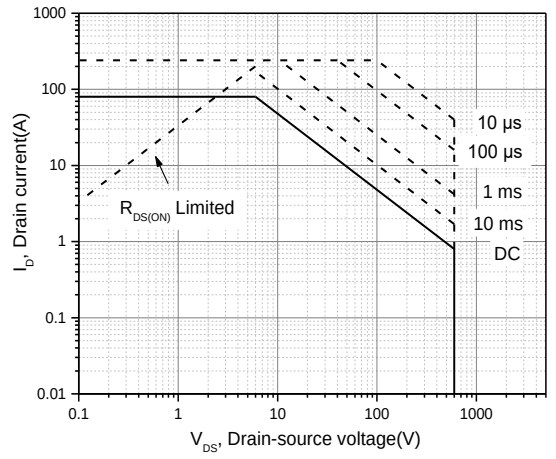

Figure 11. Safe operation area T_C=25 °C

Test circuits and waveforms

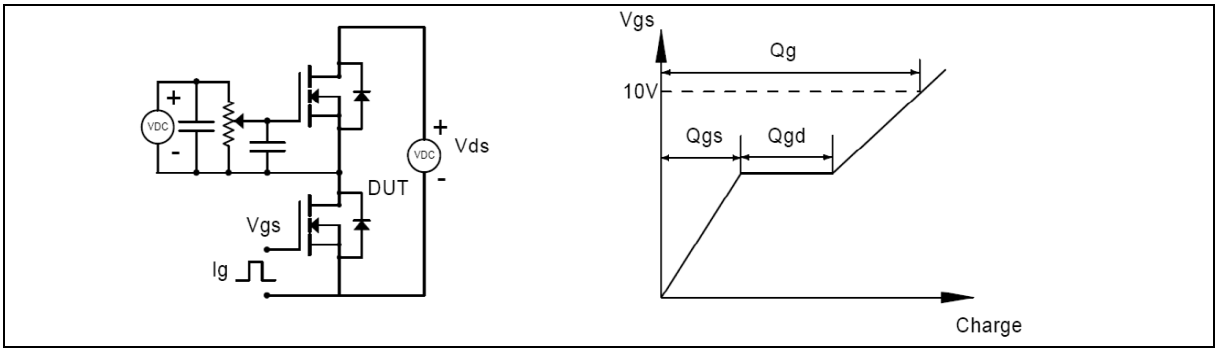

Figure 1. Gate charge test circuit & waveform

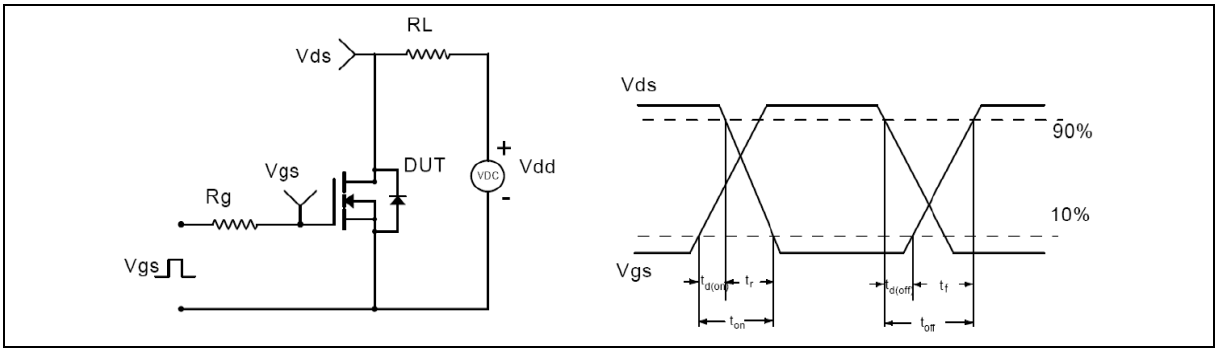

Figure 2. Switching time test circuit & waveforms

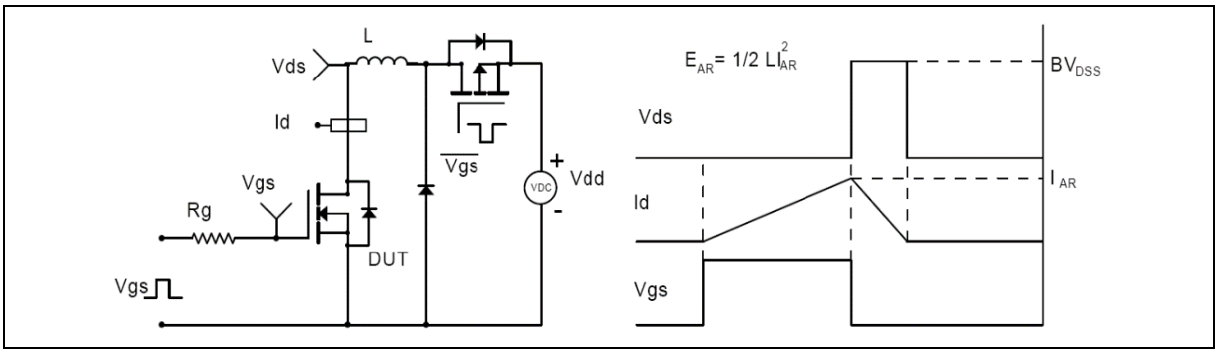

Figure 3. Unclamped inductive switching (UIS) test circuit & waveforms

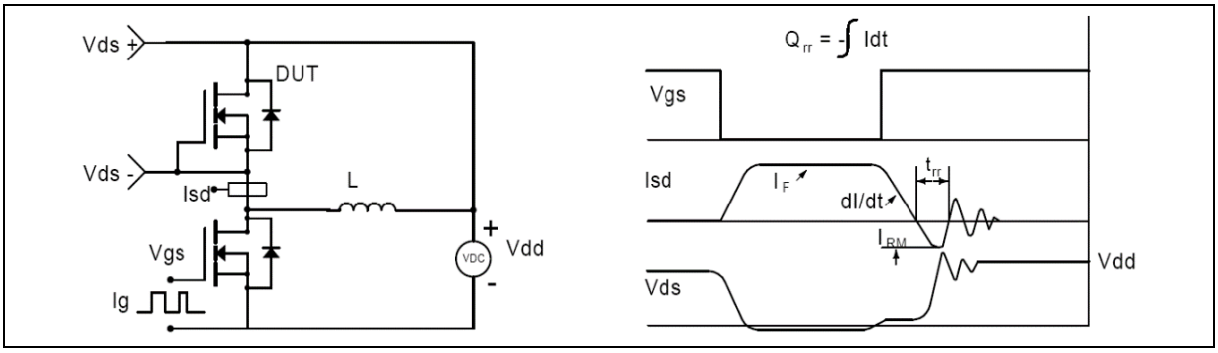

Figure 4. Diode reverse recovery test circuit & waveforms

Package Information

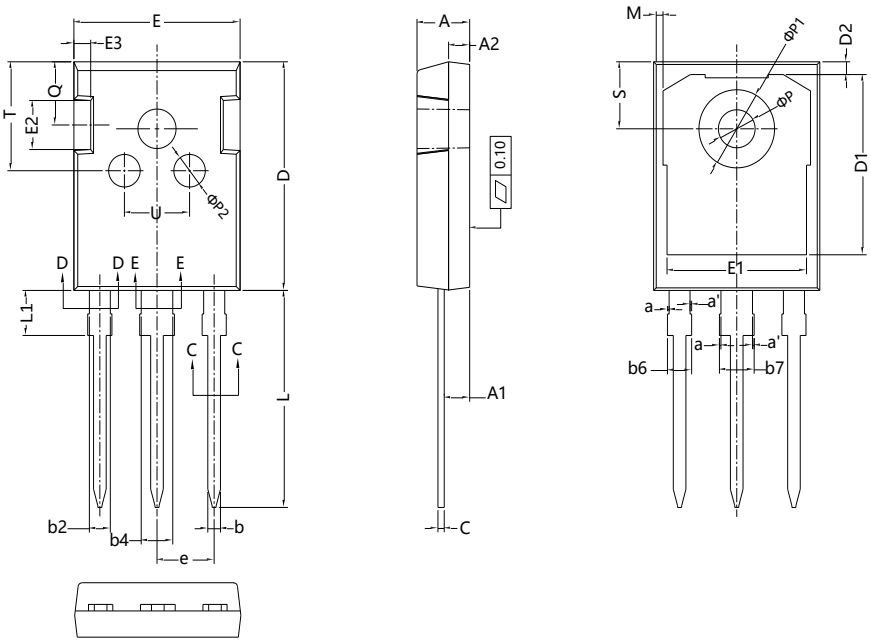

Symbol	mm		
	Min	Nom	Max
A	4.90	5.00	5.10
A1	2.31	2.41	2.51
A2	1.90	2.00	2.10
a	0.00	-	0.15
a'	0.00	-	0.15
b	1.16	-	1.26
b2	1.96	-	2.06
b4	2.96	-	3.06
b6	-	-	2.25
b7	-	-	3.25
c	0.59	-	0.66
c1	0.58	0.60	0.62
D	20.90	21.00	21.10
D1	16.25	16.55	16.85
D2	1.05	1.17	1.35
E	15.70	15.80	15.90
E1	13.10	13.30	13.50
E2	4.40	4.50	4.60
E3	1.50	1.60	1.70
e	5.436 BSC		
L	19.80	19.92	20.10
L1	-	-	4.30
M	0.35	-	0.95
P	3.40	3.50	3.60
P1	7.00	-	7.40
P2	2.40	2.5	2.6
Q	5.60	-	6.0
S	6.05	6.15	6.25
T	9.8	-	10.20
U	6.00	-	6.40

Version 1: TO247-J package outline dimension

Oriental Semiconductor © Copyright Reserved V1.0

Package Information

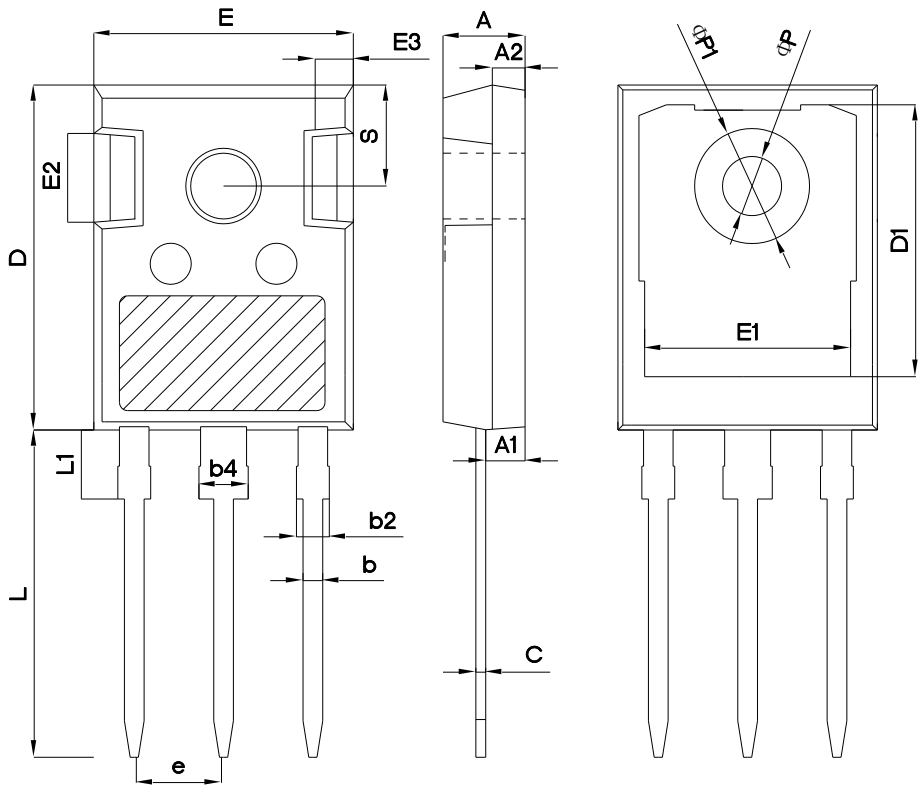

Symbol	mm		
	Min	Nom	Max
A	4.80	5.00	5.20
A1	2.21	2.41	2.59
A2	1.85	2.00	2.15
b	1.11	1.21	1.36
b2	1.91	2.01	2.21
b4	2.91	3.01	3.21
c	0.51	0.61	0.75
D	20.80	21.00	21.30
D1	16.25	16.55	16.85
E	15.50	15.80	16.10
E1	13.00	13.30	13.60
E2	4.80	5.00	5.20
E3	2.30	2.50	2.70
e	5.44 BSC		
L	19.82	19.92	20.22
L1	-	-	4.30
ΦP	3.40	3.60	3.80
ΦP1	-	-	7.30
S	6.15 BSC		

Version 2: TO247-P package outline dimension

Oriental Semiconductor © Copyright Reserved V1.0

Ordering Information

Package Type	Units/ Tube	Tubes/ Inner Box	Units/ Inner Box	Inner Boxes/ Carton Box	Units/ Carton Box
TO247-J	30	20	600	4	2400
TO247-P	30	11	330	6	1980

Product Information

Product	Package	Pb Free	RoHS	Halogen Free
OSG60R031HZF	TO247	yes	yes	yes

Legal Disclaimer

The information given in this document shall in no event be regarded as a guarantee of conditions or characteristics. With respect to any examples or hints given herein, any typical values stated herein and/or any information regarding the application of the device, Oriental Semiconductor hereby disclaims any and all warranties and liabilities of any kind, including without limitation, warranties of non-infringement of intellectual property rights of any third party.

For further information on technology, delivery terms and conditions and prices, please contact the Oriental Semiconductor sales representatives (www.orientalsemi.com).

© Oriental Semiconductor Co.,Ltd. All Rights Reserved

ORIENTAL SEMICONDUCTOR

A Power Semiconductor Innovator