## General Description

The GreenMOS® high voltage MOSFET utilizes charge balance technology to achieve outstanding low on-resistance and lower gate charge. It is engineered to minimize conduction loss, provide superior switching performance and robust avalanche capability.

The GreenMOS® Generic series is optimized for extreme switching performance to minimize switching loss. It is tailored for high power density applications to meet the highest efficiency standards.

## Features

GreenMOS®

RoHS compliant

- Low $R_{DS(ON)}$ & FOM
- Extremely low switching loss
- Excellent stability and uniformity

## Applications

- PC power
- LED lighting
- Telecom power
- Server power
- EV Charger
- Solar/UPS

## Key Performance Parameters

| Parameter | Value | Unit |
|---|---|---|
| $V_{DS,\ min}$ @ $T_{j(max)}$ | 650 | V |
| $I_{D,\ pulse}$ | 120 | A |
| $R_{DS(ON)\ ,\ max}$ @ $V_{GS}$=10V | 92 | mΩ |
| $Q_g$ | 44.9 | nC |

## Marking Information

| Product Name | Package | Marking |
|---|---|---|
| OSG60R092HF | TO247 | OSG60R092H |

## Package & Pin Information

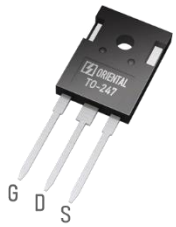


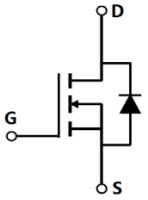


Oriental Semiconductor © Copyright Reserved V2.0

## Absolute Maximum Ratings at $T_j$=25°C unless otherwise noted

| Parameter | Symbol | Value | Unit |
|---|---|---|---|
| Drain-source voltage | $V_{DS}$ | 600 | V |
| Gate-source voltage | $V_{GS}$ | ±30 | V |
| Continuous drain current[1], $T_C$=25 °C | $I_D$ | 40 | A |
| Continuous drain current[1], $T_C$=100 °C | | 25 | |
| Pulsed drain current[2], $T_C$=25 °C | $I_{D,\ pulse}$ | 120 | A |
| Continuous diode forward current[1], $T_C$=25 °C | $I_S$ | 40 | A |
| Diode pulsed current[2], $T_C$=25 °C | $I_{S,\ pulse}$ | 120 | A |
| Power dissipation[3], $T_C$=25 °C | $P_D$ | 278 | W |
| Single pulsed avalanche energy[5] | $E_{AS}$ | 1000 | mJ |
| MOSFET dv/dt ruggedness, $V_{DS}$=0…480 V | dv/dt | 50 | V/ns |
| Reverse diode dv/dt, $V_{DS}$=0…480 V, $I_{SD}$≤$I_D$ | dv/dt | 15 | V/ns |
| Operation and storage temperature | $T_{stg}$, $T_j$ | -55 to 150 | °C |

## Thermal Characteristics

| Parameter | Symbol | Value | Unit |
|---|---|---|---|
| Thermal resistance, junction-case | $R_{\theta JC}$ | 0.45 | °C/W |
| Thermal resistance, junction-ambient[4] | $R_{\theta JA}$ | 62 | °C/W |

## Electrical Characteristics at $T_j$=25°C unless otherwise specified

| Parameter | Symbol | Min. | Typ. | Max. | Unit | Test condition |
|---|---|---|---|---|---|---|
| Drain-source breakdown voltage | $BV_{DSS}$ | 600 | | | V | $V_{GS}$=0 V, $I_D$=1 mA |
| | | 650 | | | | $V_{GS}$=0 V, $I_D$=1 mA, $T_j$=150 °C |
| Gate threshold voltage | $V_{GS(th)}$ | 2.0 | | 4.0 | V | $V_{DS}$=$V_{GS}$, $I_D$=1 mA |
| Drain-source on-state resistance | $R_{DS(ON)}$ | | 0.08 | 0.092 | Ω | $V_{GS}$=10 V, $I_D$=20 A |
| | | | 0.225 | | | $V_{GS}$=10 V, ID=20 A, $T_j$=150 °C |
| Gate-source leakage current | $I_{GSS}$ | | | 100 | nA | $V_{GS}$=30 V |
| | | | | -100 | | $V_{GS}$=-30 V |
| Drain-source leakage current | $I_{DSS}$ | | | 1 | μA | $V_{DS}$=600 V, $V_{GS}$=0 V |

Oriental Semiconductor © Copyright Reserved V2.0

## Dynamic Characteristics

| Parameter | Symbol | Min. | Typ. | Max. | Unit | Test condition |
|---|---|---|---|---|---|---|
| Input capacitance | $C_{iss}$ | | 3099.7 | | pF | $V_{GS}$=0 V, $V_{DS}$=50 V, $f$=200 KHz |
| Output capacitance | $C_{oss}$ | | 208.2 | | pF | |
| Reverse transfer capacitance | $C_{rss}$ | | 4.01 | | pF | |
| Turn-on delay time | $t_{d(on)}$ | | 71.9 | | ns | $V_{GS}$=10 V, $V_{DS}$=400 V, $R_G$=25 Ω, $I_D$=20 A |
| Rise time | $t_r$ | | 62.4 | | ns | |
| Turn-off delay time | $t_{d(off)}$ | | 109.5 | | ns | |
| Fall time | $t_f$ | | 71.6 | | ns | |

## Gate Charge Characteristics

| Parameter | Symbol | Min. | Typ. | Max. | Unit | Test condition |
|---|---|---|---|---|---|---|
| Total gate charge | $Q_g$ | | 44.9 | | nC | $V_{GS}$=10 V, $V_{DS}$=400 V, $I_D$=20 A |
| Gate-source charge | $Q_{gs}$ | | 12.9 | | nC | |
| Gate-drain charge | $Q_{gd}$ | | 14 | | nC | |
| Gate plateau voltage | $V_{plateau}$ | | 5.6 | | V | |

## Body Diode Characteristics

| Parameter | Symbol | Min. | Typ. | Max. | Unit | Test condition |
|---|---|---|---|---|---|---|
| Diode forward voltage | $V_{SD}$ | | | 1.3 | V | $I_S$=40 A, $V_{GS}$=0 V |
| Reverse recovery time | $t_{rr}$ | | 392 | | ns | $V_R$=400 V, $I_S$=20 A, di/dt=100 A/μs |
| Reverse recovery charge | $Q_{rr}$ | | 6.3 | | μC | |
| Peak reverse recovery current | $I_{rrm}$ | | 29.3 | | A | |

**Note**

1) Calculated continuous current based on maximum allowable junction temperature.
2) Repetitive rating; pulse width limited by max. junction temperature.
3) Pd is based on max. junction temperature, using junction-case thermal resistance.
4) $V_{DD}$=100 V, $V_{GS}$=10 V, L=80 mH, starting $T_j$=25 °C.

Oriental Semiconductor © Copyright Reserved V2.0

## Electrical Characteristics Diagrams

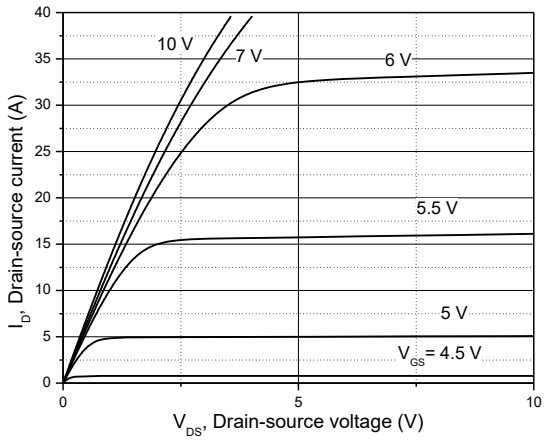


**Figure 1. Typ. output characteristics**

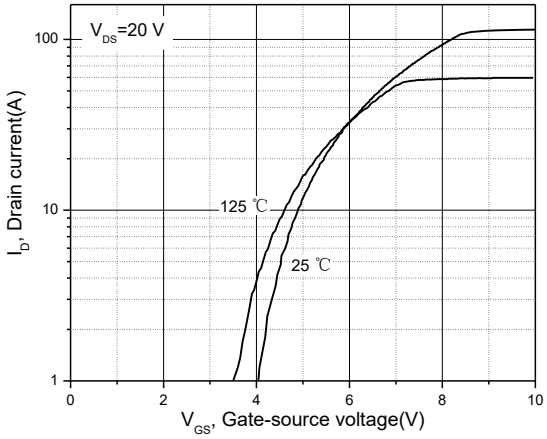


**Figure 2. Typ. transfer characteristics**

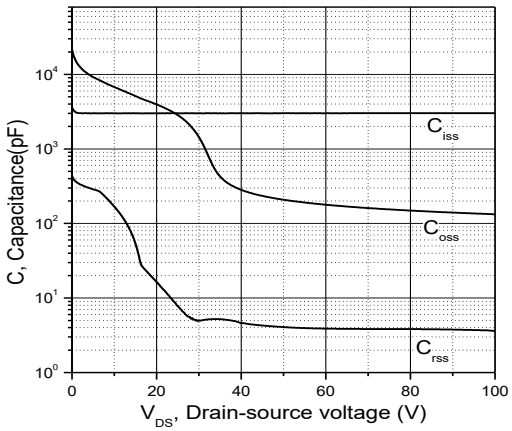


**Figure 3. Typ. capacitances**

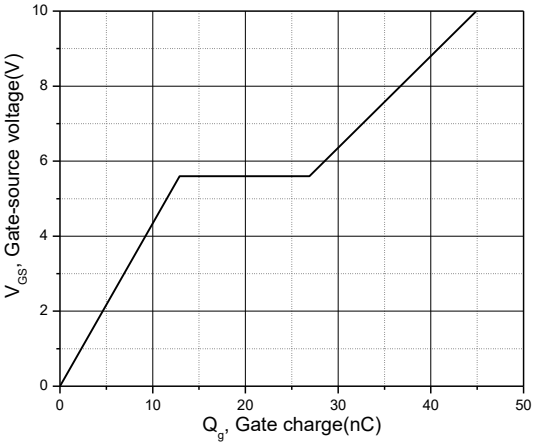


**Figure 4. Typ. gate charge**

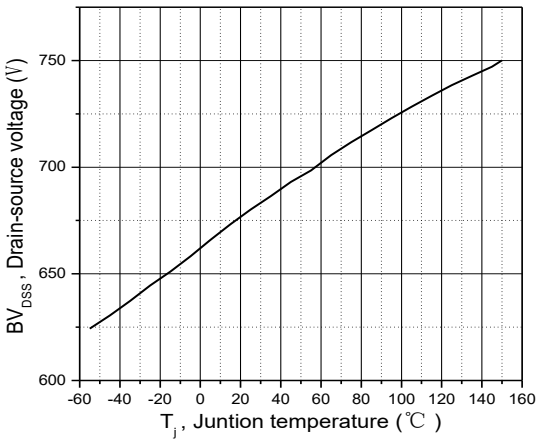


**Figure 5. Drain-source breakdown voltage**

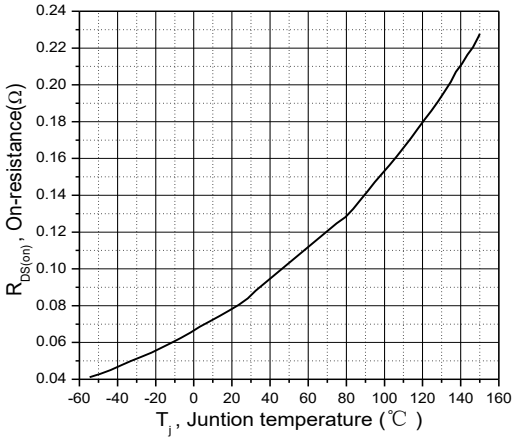


**Figure 6. Drain-source on-state resistance**

Oriental Semiconductor © Copyright Reserved V2.0

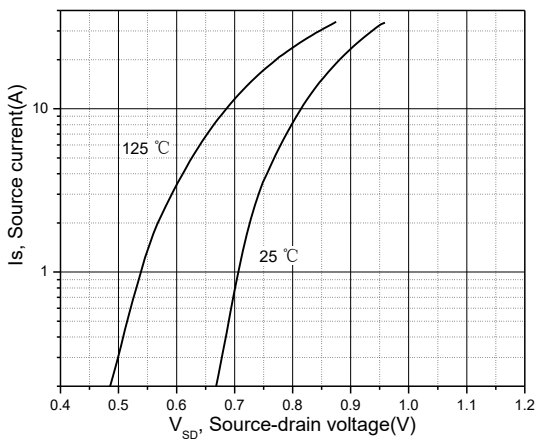


**Figure 7. Forward characteristic of body diode**

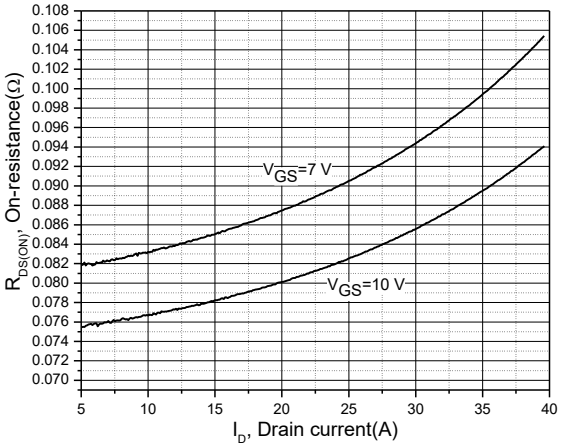


**Figure 8. Drain-source on-state resistance**

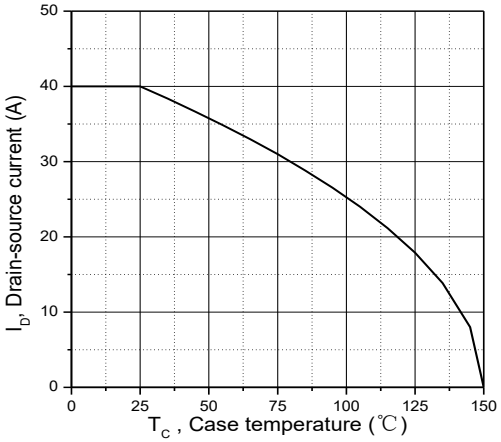


**Figure 9. Drain current**

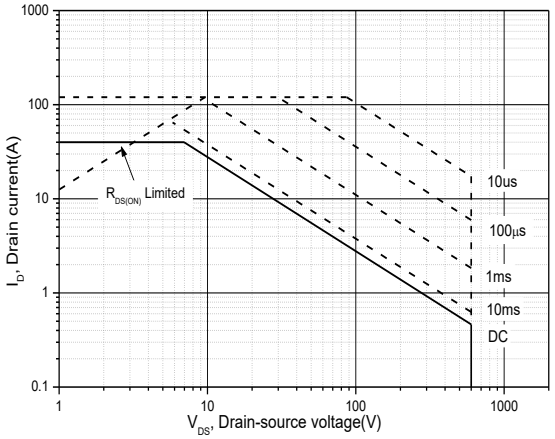


**Figure 10. Safe operation area $T_C$=25 °C**

## Test circuits and waveforms

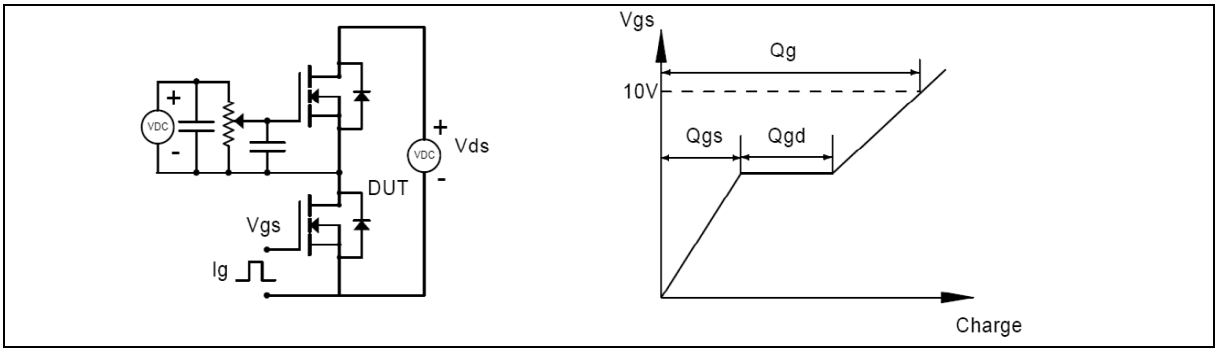


**Figure 1. Gate charge test circuit & waveform**

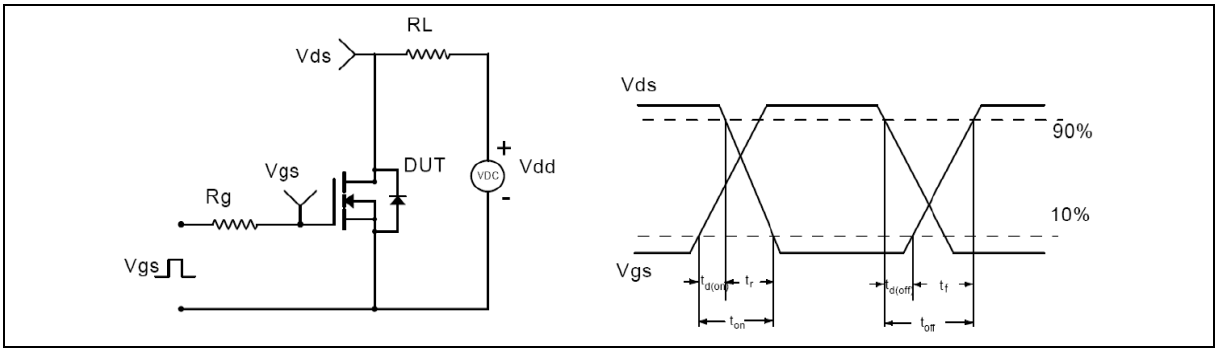


**Figure 2. Switching time test circuit & waveforms**

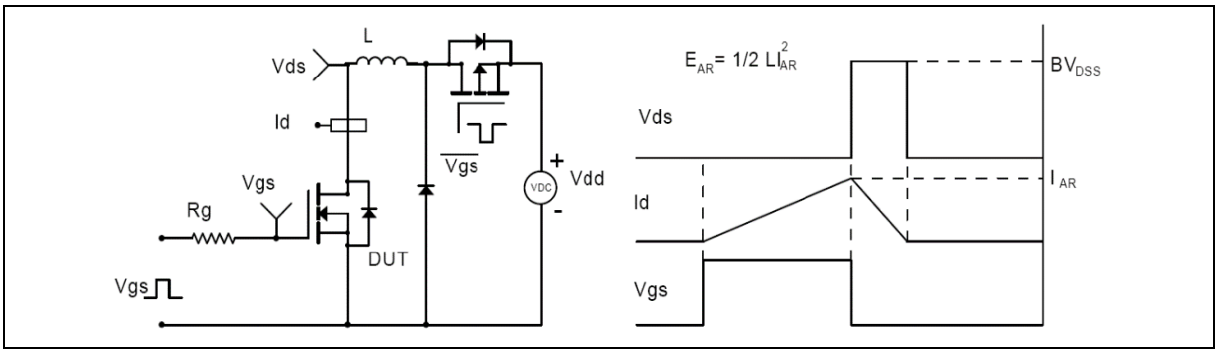


**Figure 3. Unclamped inductive switching (UIS) test circuit & waveforms**

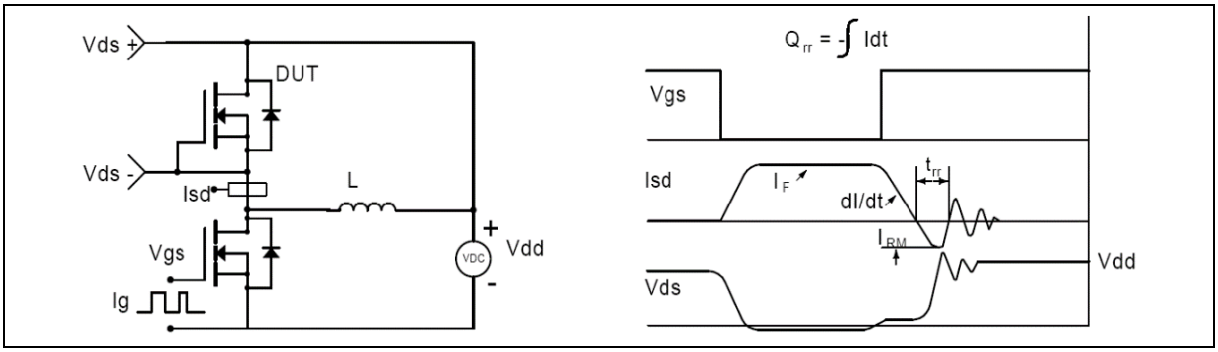


**Figure 4. Diode reverse recovery test circuit & waveforms**

## Package Information

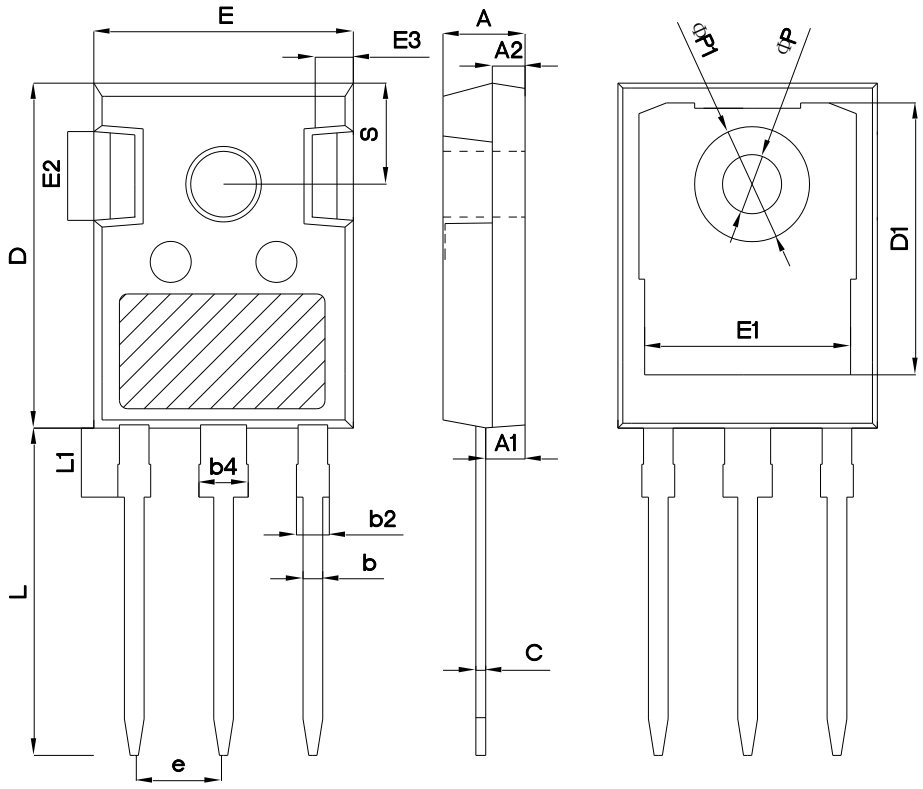


| Symbol | mm | | |
|---|---|---|---|
| | Min | Nom | Max |
| A | 4.80 | 5.00 | 5.20 |
| A1 | 2.21 | 2.41 | 2.59 |
| A2 | 1.85 | 2.00 | 2.15 |
| b | 1.11 | 1.21 | 1.36 |
| b2 | 1.91 | 2.01 | 2.21 |
| b4 | 2.91 | 3.01 | 3.21 |
| c | 0.51 | 0.61 | 0.75 |
| D | 20.80 | 21.00 | 21.30 |
| D1 | 16.25 | 16.55 | 16.85 |
| E | 15.50 | 15.80 | 16.10 |
| E1 | 13.00 | 13.30 | 13.60 |
| E2 | 4.80 | 5.00 | 5.20 |
| E3 | 2.30 | 2.50 | 2.70 |
| e | 5.44 BSC | | |
| L | 19.82 | 19.92 | 20.22 |
| L1 | - | - | 4.30 |
| ΦP | 3.40 | 3.60 | 3.80 |
| ΦP1 | - | - | 7.30 |
| S | 6.15 BSC | | |

Version 1:, TO247-P package outline dimension

Oriental Semiconductor © Copyright Reserved V2.0

## Package Information

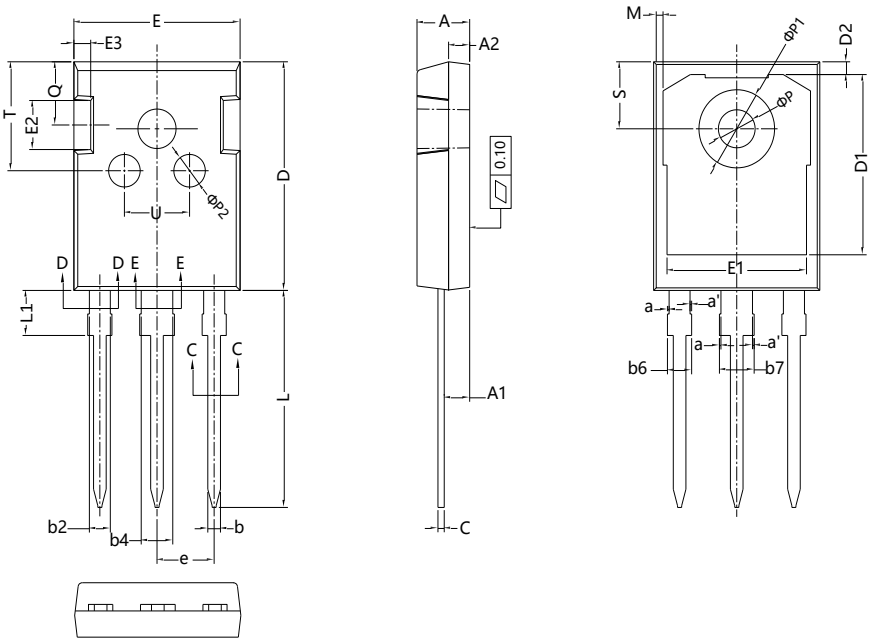


| Symbol | mm | | |
|---|---|---|---|
| | Min | Nom | Max |
| A | 4.90 | 5.00 | 5.10 |
| A1 | 2.31 | 2.41 | 2.51 |
| A2 | 1.90 | 2.00 | 2.10 |
| a | 0.00 | - | 0.15 |
| a' | 0.00 | - | 0.15 |
| b | 1.16 | - | 1.26 |
| b2 | 1.96 | - | 2.06 |
| b4 | 2.96 | - | 3.06 |
| b6 | - | - | 2.25 |
| b7 | - | - | 3.25 |
| c | 0.59 | - | 0.66 |
| c1 | 0.58 | 0.60 | 0.62 |
| D | 20.90 | 21.00 | 21.10 |
| D1 | 16.25 | 16.55 | 16.85 |
| D2 | 1.05 | 1.17 | 1.35 |
| E | 15.70 | 15.80 | 15.90 |
| E1 | 13.10 | 13.30 | 13.50 |
| E2 | 4.40 | 4.50 | 4.60 |
| E3 | 1.50 | 1.60 | 1.70 |
| e | 5.436 BSC | | |
| L | 19.80 | 19.92 | 20.10 |
| L1 | - | - | 4.30 |
| M | 0.35 | - | 0.95 |
| P | 3.40 | 3.50 | 3.60 |
| P1 | 7.00 | - | 7.40 |
| P2 | 2.40 | 2.5 | 2.6 |
| Q | 5.60 | - | 6.0 |
| S | 6.05 | 6.15 | 6.25 |
| T | 9.8 | - | 10.20 |
| U | 6.00 | - | 6.40 |

Version 2: TO247-J package outline dimension

Oriental Semiconductor © Copyright Reserved V2.0

## Ordering Information

| Package Type | Units/ Tube | Tubes/ Inner Box | Units/ Inner Box | Inner Boxes/ Carton Box | Units/ Carton Box |
|---|---|---|---|---|---|
| TO247-P | 30 | 11 | 330 | 6 | 1980 |
| TO247-J | 30 | 20 | 600 | 4 | 2400 |

## Product Information

| Product | Package | Pb Free | RoHS | Halogen Free |
|---|---|---|---|---|
| OSG60R092HF | TO247 | yes | yes | yes |

## Legal Disclaimer

The information given in this document shall in no event be regarded as a guarantee of conditions or characteristics. With respect to any examples or hints given herein, any typical values stated herein and/or any information regarding the application of the device, Oriental Semiconductor hereby disclaims any and all warranties and liabilities of any kind, including without limitation, warranties of non-infringement of intellectual property rights of any third party.

For further information on technology, delivery terms and conditions and prices, please contact the Oriental Semiconductor sales representatives (www.orientalsemi.com).

**© Oriental Semiconductor Co.,Ltd. All Rights Reserved**

ORIENTAL SEMICONDUCTOR

*A Power Semiconductor Innovator*