General Description

The GreenMOS® high voltage MOSFET utilizes charge balance technology to achieve outstanding low on-resistance and lower gate charge. It is engineered to minimize conduction loss, provide superior switching performance and robust avalanche capability.

The GreenMOS® Z series is integrated with fast recovery diode (FRD) to minimize reverse recovery time. It is suitable for resonant switching topologies to reach higher efficiency, higher reliability and smaller form factor.

Features

GreenMOS®

RoHS compliant

- Low $R_{DS(ON)}$ & FOM
- Extremely low switching loss
- Excellent stability and uniformity

Applications

- LED lighting
- Telecom
- Adapter
- Sever
- Solar/UPS

Key Performance Parameters

Parameter	Value	Unit
V_{DS}	600	V
$I_{D,\ pulse}$	90	A
$R_{DS(ON),\ max}$ @ V_{GS}=10V	108	mΩ
Q_g	55	nC

Marking Information

Product Name	Package	Marking
OSG60R108KSZF-F	TO263	OSG60R108KSZ

Package & Pin Information



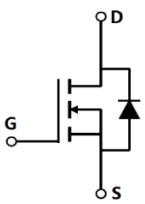

Oriental Semiconductor © Copyright Reserved V1.0

Absolute Maximum Ratings at T_j=25°C unless otherwise noted

Parameter	Symbol	Value	Unit
Drain-source voltage	V_{DS}	600	V
Gate-source voltage	V_{GS}	±30	V
Continuous drain current[1], T_C=25 °C	I_D	30	A
Continuous drain current[1], T_C=100 °C		19	
Pulsed drain current[2], T_C=25 °C	$I_{D,\ pulse}$	90	A
Continuous diode forward current[1], T_C=25 °C	I_S	30	A
Diode pulsed current[2], T_C=25 °C	$I_{S,\ pulse}$	90	A
Power dissipation[3], T_C=25 °C	P_D	219	W
Single pulsed avalanche energy[5]	E_{AS}	700	mJ
MOSFET dv/dt ruggedness, V_{DS}=0…480 V	dv/dt	50	V/ns
Reverse diode dv/dt, V_{DS}=0…480 V, I_{SD}≤I_D	dv/dt	50	V/ns
Operation and storage temperature	T_{stg}, T_j	-55 to 150	°C

Thermal Characteristics

Parameter	Symbol	Value	Unit
Thermal resistance, junction-case	$R_{\theta JC}$	0.57	°C/W
Thermal resistance, junction-ambient[4]	$R_{\theta JA}$	62	°C/W

Electrical Characteristics at T_j=25°C unless otherwise specifie2

Parameter	Symbol	Min.	Typ.	Max.	Unit	Test condition
Drain-source breakdown voltage	BV_{DSS}	600			V	V_{GS}=0 V, I_D=1 mA
Gate threshold voltage	$V_{GS(th)}$	3.0		4.5	V	V_{DS}=V_{GS}, I_D=1 mA
Drain-source on-state resistance	$R_{DS(ON)}$		85.5	108	mΩ	V_{GS}=10 V, I_D=15 A
			216			V_{GS}=10 V, I_D=15 A, T_j=150 °C
Gate-source leakage current	I_{GSS}			100	nA	V_{GS}=30 V
				-100		V_{GS}=-30 V
Drain-source leakage current	I_{DSS}			10	μA	V_{DS}=600 V, V_{GS}=0 V
Gate resistance	R_G		17.3		Ω	f=1 MHz, Open drain

Oriental Semiconductor © Copyright Reserved V1.0

Dynamic Characteristics

Parameter	Symbol	Min.	Typ.	Max.	Unit	Test condition
Input capacitance	C_{iss}		2740		pF	V_{GS}=0 V, V_{DS}=50 V, f=100 kHz
Output capacitance	C_{oss}		209		pF	
Reverse transfer capacitance	C_{rss}		8		pF	
Effective output capacitance, energy related	$C_{o(er)}$		105		pF	V_{GS}=0 V, V_{DS}=0 V-400 V
Effective output capacitance, time related	$C_{o(tr)}$		598		pF	
Turn-on delay time	$t_{d(on)}$		34		ns	V_{GS}=10 V, V_{DS}=400 V, R_G=2 Ω, I_D=16 A
Rise time	t_r		34		ns	
Turn-off delay time	$t_{d(off)}$		136		ns	
Fall time	t_f		4		ns	

Gate Charge Characteristics

Parameter	Symbol	Min.	Typ.	Max.	Unit	Test condition
Total gate charge	Q_g		55		nC	V_{GS}=10 V, V_{DS}=400 V, I_D=16 A
Gate-source charge	Q_{gs}		14		nC	
Gate-drain charge	Q_{gd}		19		nC	
Gate plateau voltage	$V_{plateau}$		5.7		V	

Body Diode Characteristics

Parameter	Symbol	Min.	Typ.	Max.	Unit	Test condition
Diode forward voltage	V_{SD}			1.3	V	I_S=30 A, V_{GS}=0 V
Reverse recovery time	t_{rr}		150		ns	V_R=400 V, I_S=16 A, di/dt=100 A/μs
Reverse recovery charge	Q_{rr}		1.3		μC	
Peak reverse recovery current	I_{rrm}		13.5		A	

Note

1) Calculated continuous current based on maximum allowable junction temperature.
2) Repetitive rating; pulse width limited by max. junction temperature.
3) Pd is based on max. junction temperature, using junction-case thermal resistance.
4) The value of $R_{\theta JA}$ is measured with the device mounted on 1 in ^{2} FR-4 board with 2oz. Copper, in a still air environment with T_a=25 °C.
5) V_{DD}=100 V, V_{GS}=10 V, L=80 mH, starting T_j=25 °C.

Oriental Semiconductor © Copyright Reserved V1.0

Electrical Characteristics Diagrams

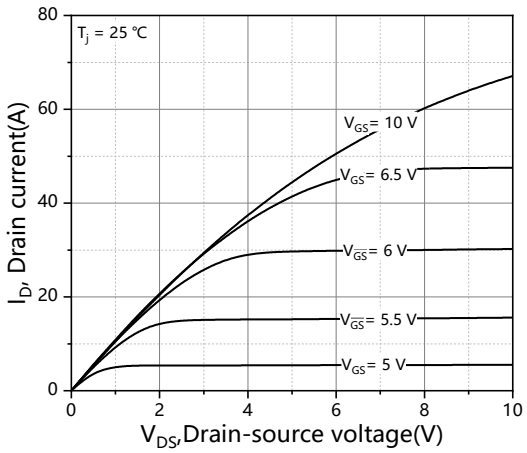

Figure 1. Typ. output characteristics T_j=25℃

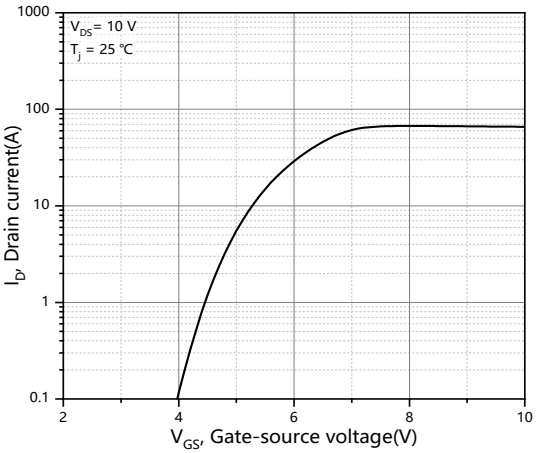

Figure 2. Typ. transfer characteristics

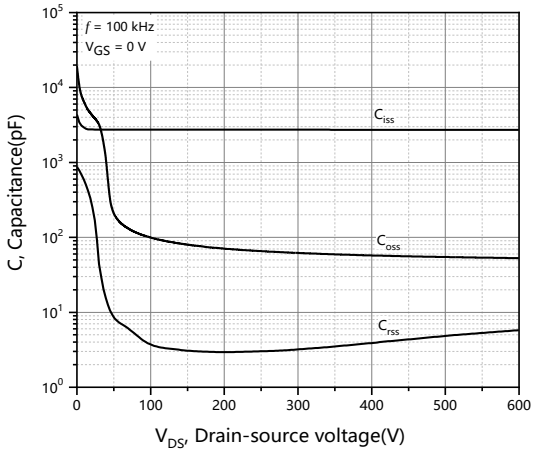

Figure 3. Typ. capacitances

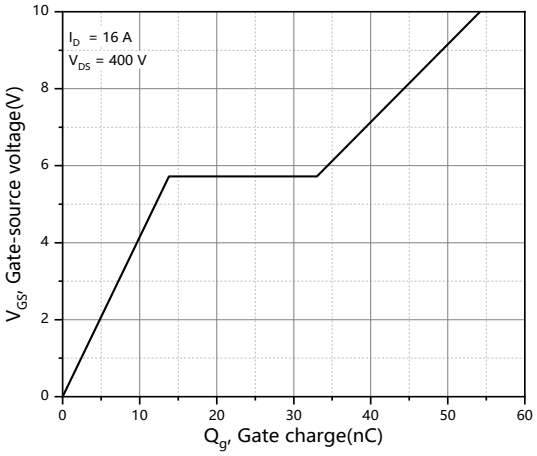

Figure 4. Typ. gate charge

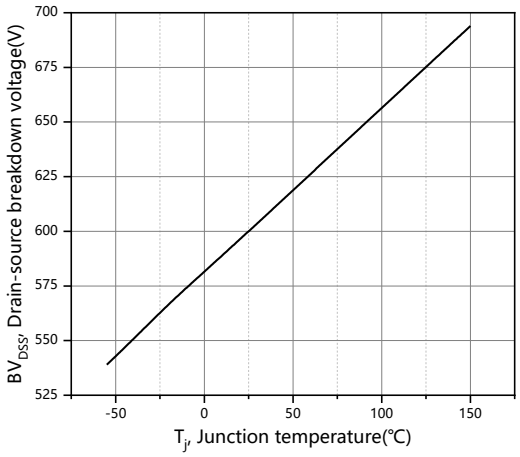

Figure 5. Drain-source breakdown voltage

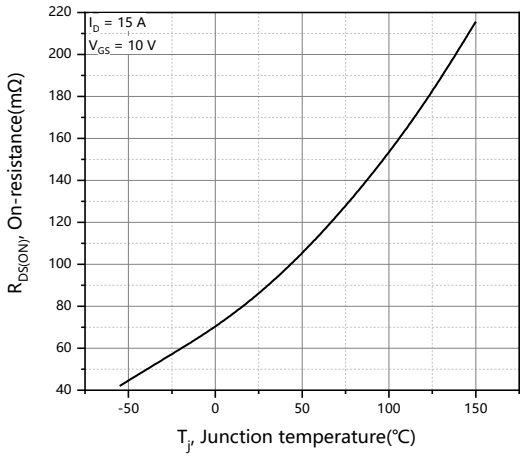

Figure 6. Drain-source on-state resistance

Oriental Semiconductor © Copyright Reserved V1.0

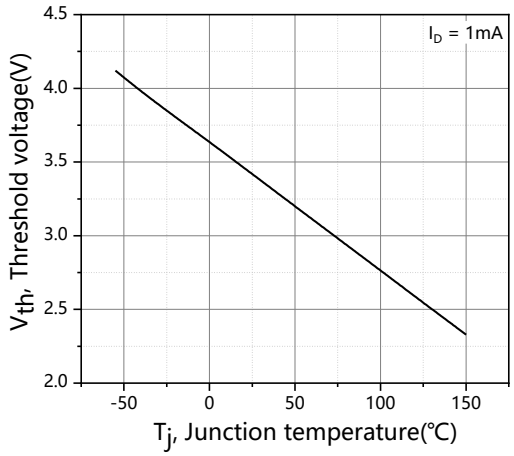

Figure 7. Threshold voltage

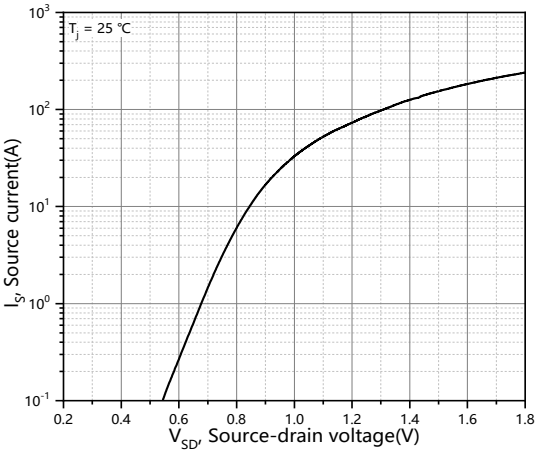

Figure 8. Forward characteristic of body diode

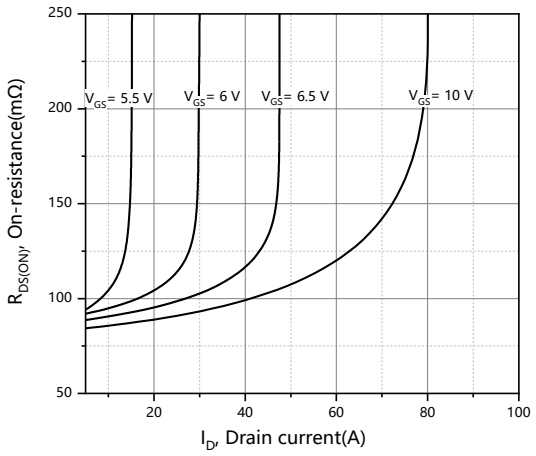

Figure 9. Drain-source on-state resistance

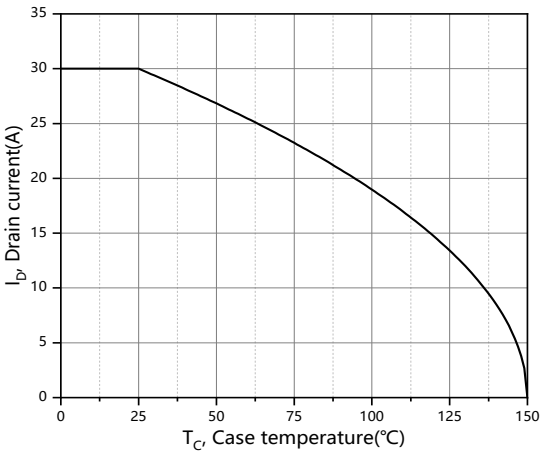

Figure 10. Drain current

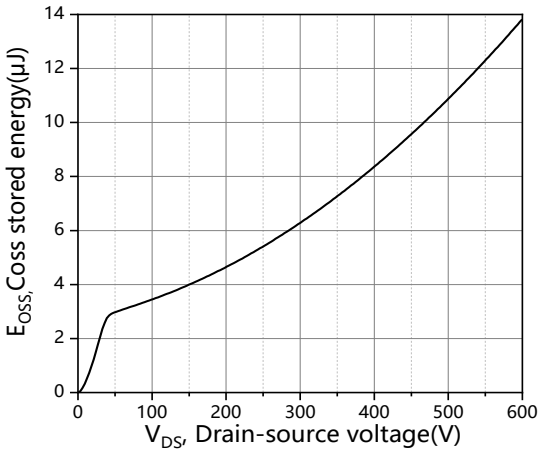

Figure 11. Typ. Coss stored energy

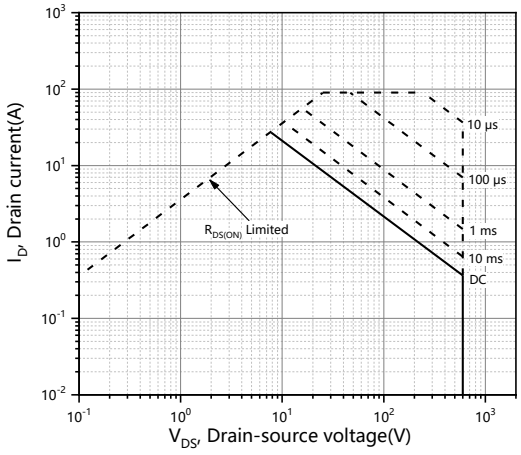

Figure 12. Safe operation area Tc=25℃

Oriental Semiconductor © Copyright Reserved V1.0

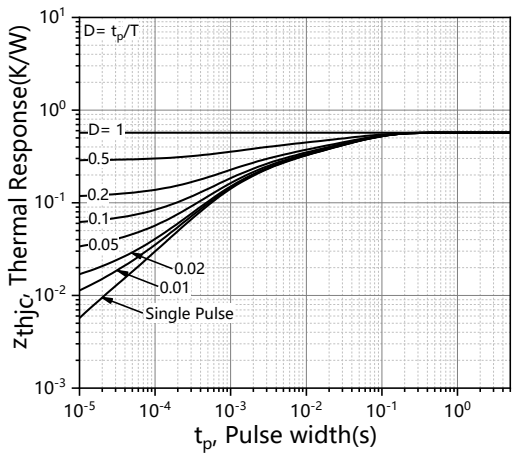

Figure 13. Max. transient thermal impedance

Test circuits and waveforms

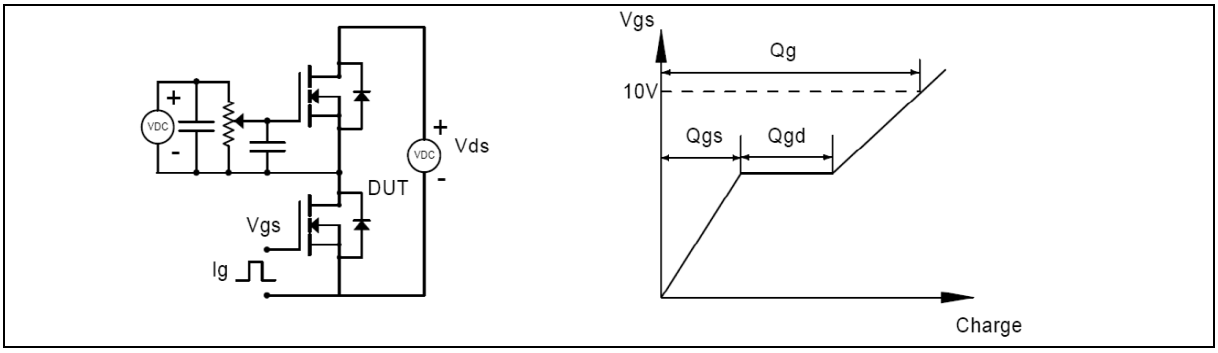

Figure 1. Gate charge test circuit & waveform

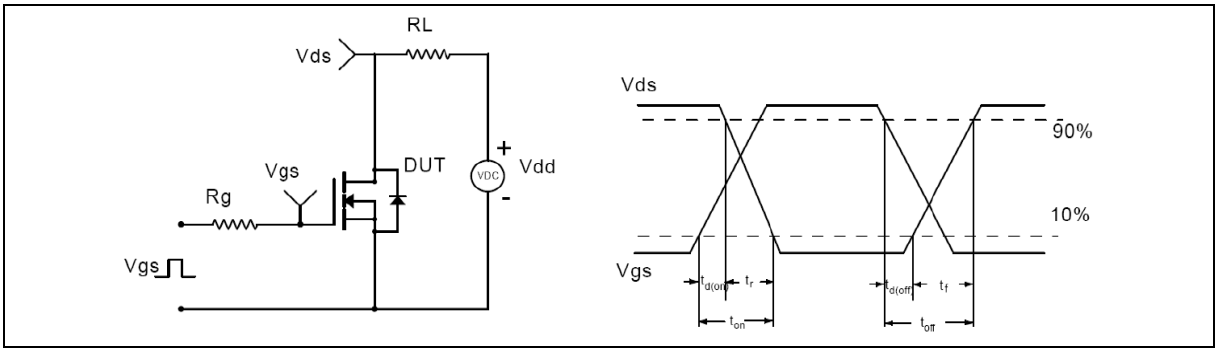

Figure 2. Switching time test circuit & waveforms

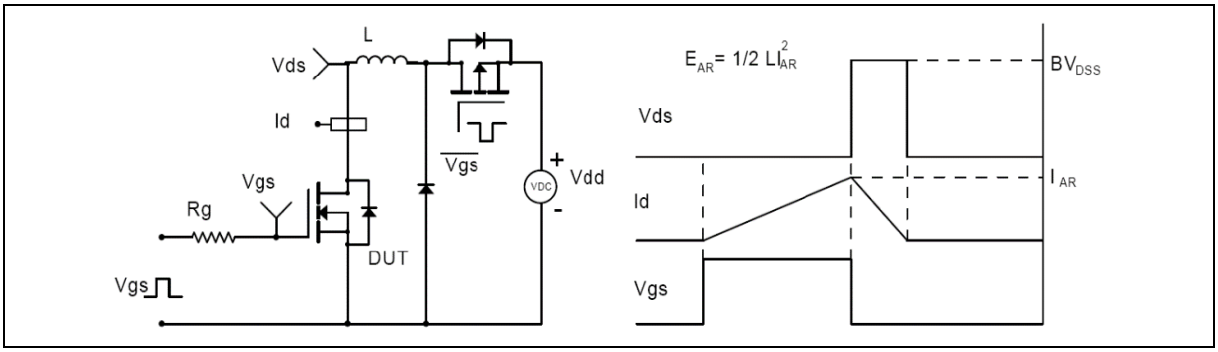

Figure 3. Unclamped inductive switching (UIS) test circuit & waveforms

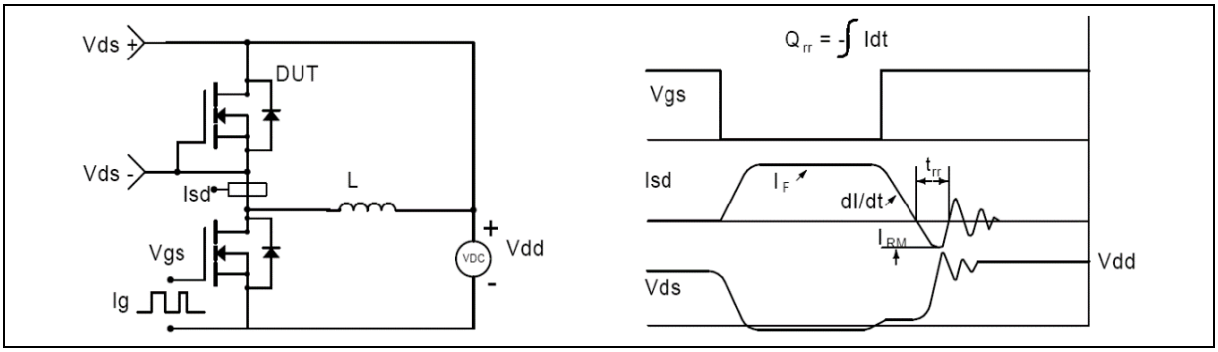

Figure 4. Diode reverse recovery test circuit & waveforms

Oriental Semiconductor © Copyright Reserved V1.0

Package Information

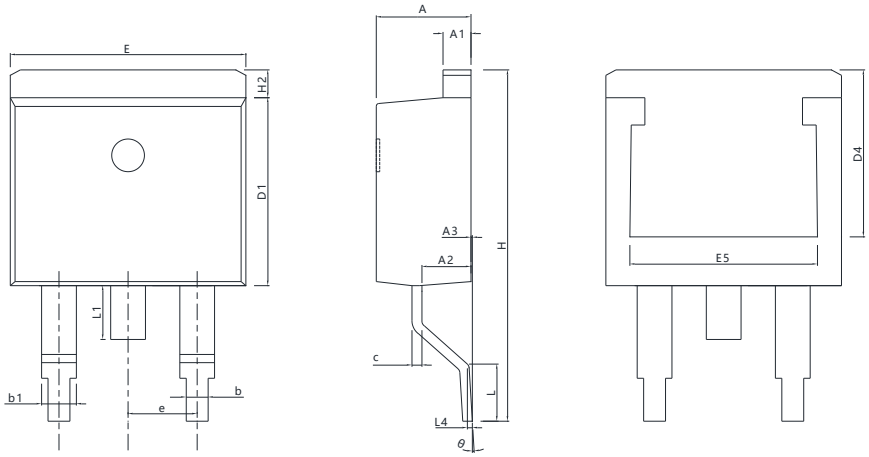

Symbol	mm		
	Min	Nom	Max
A	4.37	4.57	4.77
A1	1.22	1.27	1.42
A2	2.49	2.69	2.89
A3	0.00	0.13	0.25
b	0.70	0.81	0.96
b1	1.17	1.27	1.47
c	0.30	0.38	0.53
D1	8.50	8.70	8.90
D4	6.60	-	-
E	9.86	10.16	10.36
E5	7.06	-	-
e	2.54 BSC		
H	14.70	15.10	15.50
H2	1.07	1.27	1.47
L	2.00	2.30	2.60
L1	1.40	1.55	1.70
L4	0.25 BSC		
θ	0°	5°	9°

Veision 1：TO263-P package outline dimension

Oriental Semiconductor © Copyright Reserved V1.0

Ordering Information

Package Type	Units/ Reel	Reels/ Inner Box	Units/ Inner Box	Inner Boxes/ Carton Box	Units/ Carton Box
TO236-P	800	1	800	5	4000

Product Information

Product	Package	Pb Free	RoHS	Halogen Free
OSG60R108KSZF-F	TO263	yes	yes	yes

Legal Disclaimer

The information given in this document shall in no event be regarded as a guarantee of conditions or characteristics. With respect to any examples or hints given herein, any typical values stated herein and/or any information regarding the application of the device, Oriental Semiconductor hereby disclaims any and all warranties and liabilities of any kind, including without limitation, warranties of non-infringement of intellectual property rights of any third party.

For further information on technology, delivery terms and conditions and prices, please contact the Oriental Semiconductor sales representatives (www.orientalsemi.com).

© Oriental Semiconductor Co.,Ltd. All Rights Reserved

ORIENTAL SEMICONDUCTOR

A Power Semiconductor Innovator