General Description

The GreenMOS® high voltage MOSFET utilizes charge balance technology to achieve outstanding low on-resistance and lower gate charge. It is engineered to minimize conduction loss, provide superior switching performance and robust avalanche capability.

The GreenMOS® Generic series is optimized for extreme switching performance to minimize switching loss. It is tailored for high power density applications to meet the highest efficiency standards.

Features

GreenMOS®

RoHS compliant

- Low $R_{DS(ON)}$ & FOM
- Extremely low switching loss
- Excellent stability and uniformity

Applications

- PC power
- LED lighting
- Telecom power
- Server power
- EV Charger
- Solar/UPS

Key Performance Parameters

Parameter	Value	Unit
$V_{DS,\ min}$ @ $T_{j(max)}$	650	V
$I_{D,\ pulse}$	69	A
$R_{DS(ON)\ ,\ max}$ @ V_{GS}=10V	150	mΩ
Q_g	23	nC

Marking Information

Product Name	Package	Marking
OSG60R150FF	TO220F	OSG60R150F

Package & Pin Information



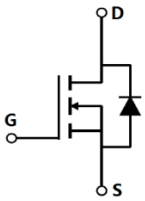

Oriental Semiconductor © Copyright Reserved V2.0

Absolute Maximum Ratings at T_j=25°C unless otherwise noted

Parameter	Symbol	Value	Unit
Drain-source voltage	V_{DS}	600	V
Gate-source voltage	V_{GS}	±30	V
Continuous drain current[1], T_C=25 °C	I_D	23	A
Continuous drain current[1], T_C=100 °C		14.5	
Pulsed drain current[2], T_C=25 °C	$I_{D,\ pulse}$	69	A
Continuous diode forward current[1], T_C=25 °C	I_S	23	A
Diode pulsed current[2], T_C=25 °C	$I_{S,\ pulse}$	69	A
Power dissipation[3], T_C=25 °C	P_D	34	W
Single pulsed avalanche energy[5]	E_{AS}	600	mJ
MOSFET dv/dt ruggedness, V_{DS}=0…480 V	dv/dt	50	V/ns
Reverse diode dv/dt, V_{DS}=0…480 V, I_{SD}≤I_D	dv/dt	15	V/ns
Operation and storage temperature	T_{stg}, T_j	-55 to 150	°C

Thermal Characteristics

Parameter	Symbol	Value	Unit
Thermal resistance, junction-case	$R_{\theta JC}$	3.67	°C/W
Thermal resistance, junction-ambient[4]	$R_{\theta JA}$	62.5	°C/W

Electrical Characteristics at T_j=25°C unless otherwise specified

Parameter	Symbol	Min.	Typ.	Max.	Unit	Test condition
Drain-source breakdown voltage	BV_{DSS}	600			V	V_{GS}=0 V, I_D=250 uA
		650				V_{GS}=0 V, I_D=250 uA, T_j=150 °C
Gate threshold voltage	$V_{GS(th)}$	2		4	V	V_{DS}=V_{GS}, I_D=250 uA
Drain-source on-state resistance	$R_{DS(ON)}$		0.12	0.15	Ω	V_{GS}=10 V, I_D=10 A
			0.29			V_{GS}=10 V, ID=10 A, T_j=150 °C
Gate-source leakage current	I_{GSS}			100	nA	V_{GS}=30 V
				-100		V_{GS}=-30 V
Drain-source leakage current	I_{DSS}			1	μA	V_{DS}=600 V, V_{GS}=0 V

Oriental Semiconductor © Copyright Reserved V2.0

Dynamic Characteristics

Parameter	Symbol	Min.	Typ.	Max.	Unit	Test condition
Input capacitance	C_{iss}		1356		pF	V_{GS}=0 V, V_{DS}=50 V, f=1 MHz
Output capacitance	C_{oss}		155		pF	
Reverse transfer capacitance	C_{rss}		2		pF	
Turn-on delay time	$t_{d(on)}$		38.2		ns	V_{GS}=10 V, V_{DS}=400 V, R_G=25 Ω, I_D=10 A
Rise time	t_r		25.2		ns	
Turn-off delay time	$t_{d(off)}$		79.2		ns	
Fall time	t_f		31.5		ns	

Gate Charge Characteristics

Parameter	Symbol	Min.	Typ.	Max.	Unit	Test condition
Total gate charge	Q_g		23		nC	V_{GS}=10 V, V_{DS}=400 V, I_D=10 A
Gate-source charge	Q_{gs}		6.0		nC	
Gate-drain charge	Q_{gd}		8.3		nC	
Gate plateau voltage	$V_{plateau}$		5.6		V	

Body Diode Characteristics

Parameter	Symbol	Min.	Typ.	Max.	Unit	Test condition
Diode forward voltage	V_{SD}			1.4	V	I_S=23 A, V_{GS}=0 V
Reverse recovery time	t_{rr}		258.1		ns	V_R=400 V, I_S=10 A, di/dt=100 A/μs
Reverse recovery charge	Q_{rr}		2.8		μC	
Peak reverse recovery current	I_{rrm}		19		A	

Note

1) Calculated continuous current based on maximum allowable junction temperature.
2) Repetitive rating; pulse width limited by max. junction temperature.
3) Pd is based on max. junction temperature, using junction-case thermal resistance.
4) The value of $R_{\theta JA}$ is measured with the device mounted on 1 in 2 FR-4 board with 2oz. Copper, in a still air environment with T_a=25 °C.
5) V_{DD}=100 V, V_{GS}=10 V, L=10.8 mH, starting T_j=25 °C.

Oriental Semiconductor © Copyright Reserved V2.0

Electrical Characteristics Diagrams

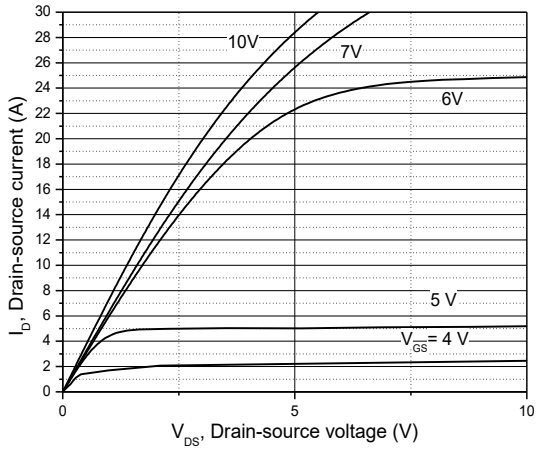

Figure 1. Typ. output characteristics

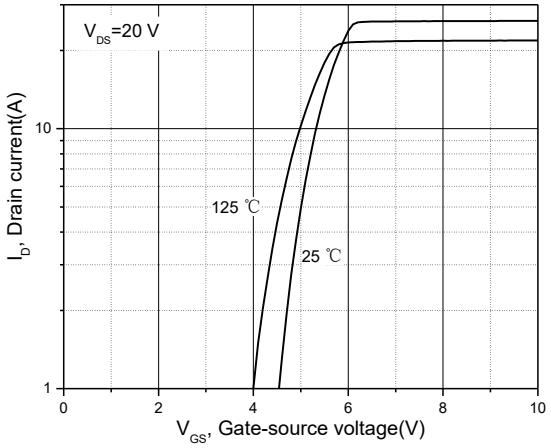

Figure 2. Typ. transfer characteristics

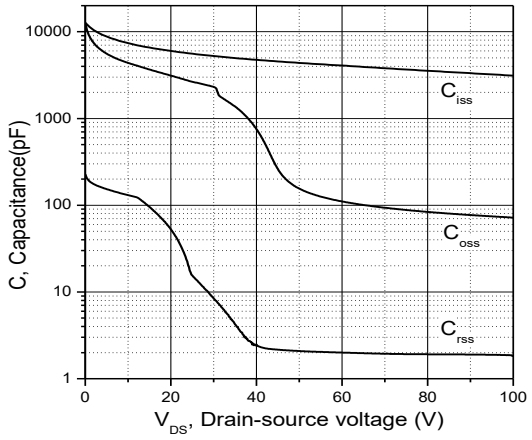

Figure 3. Typ. capacitances

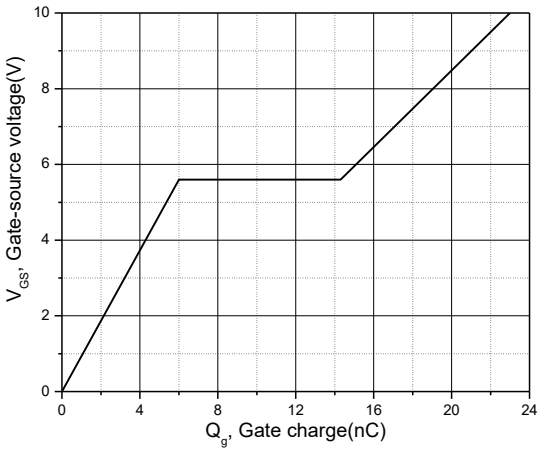

Figure 4. Typ. gate charge

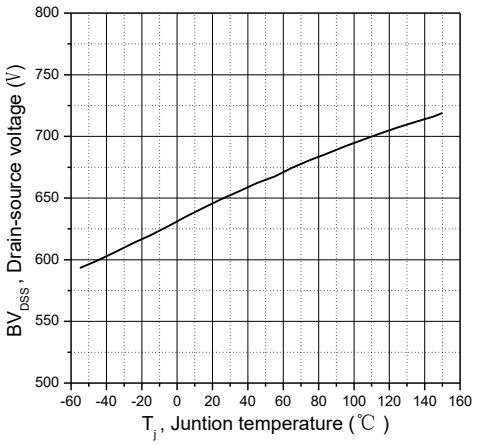

Figure 5. Drain-source breakdown voltage

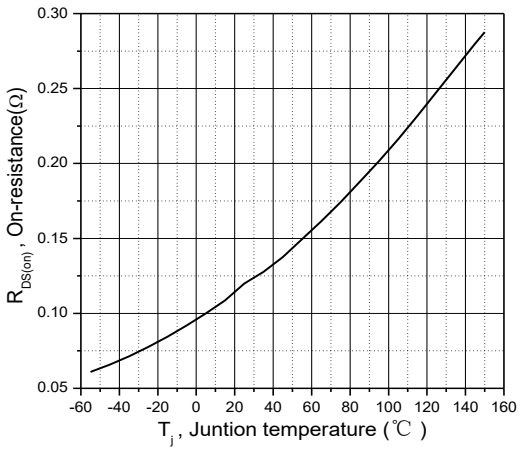

Figure 6. Drain-source on-state resistance

Oriental Semiconductor © Copyright Reserved V2.0

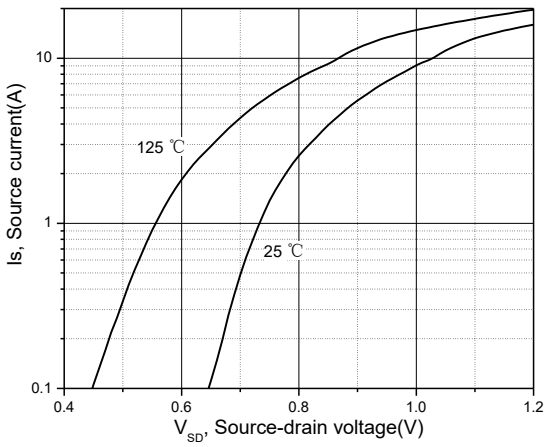

Figure 7. Forward characteristic of body diode

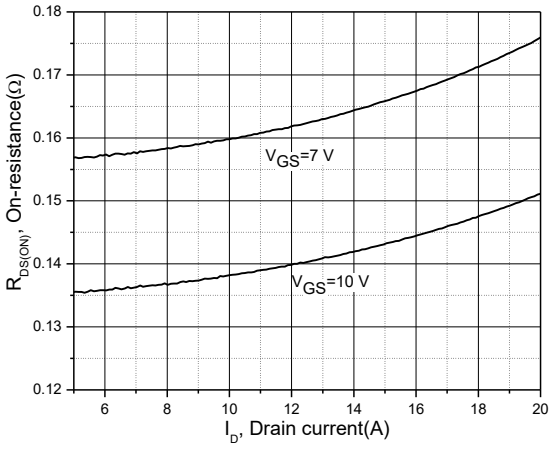

Figure 8. Drain-source on-state resistance

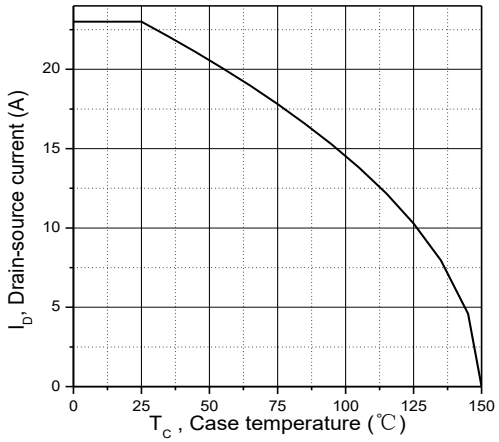

Figure 9. Drain current

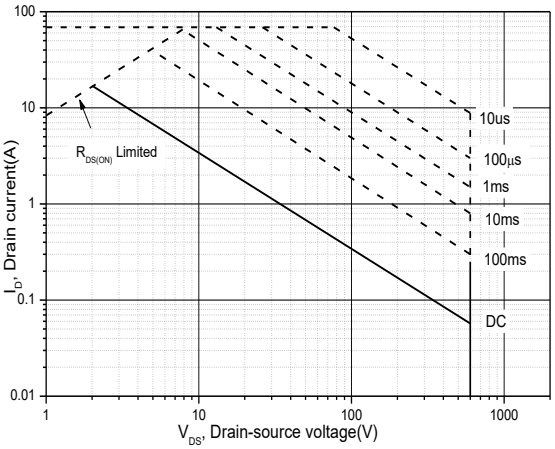

Figure 10. Safe operation area T_C=25 °C

Test circuits and waveforms

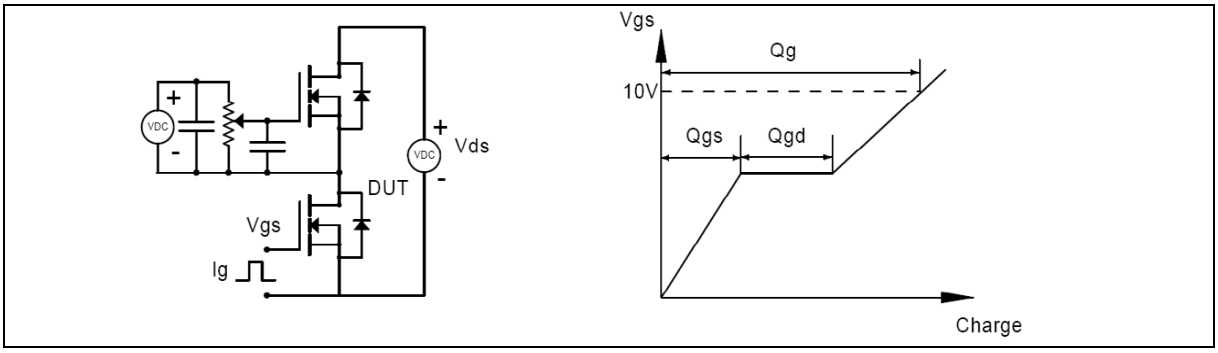

Figure 1. Gate charge test circuit & waveform

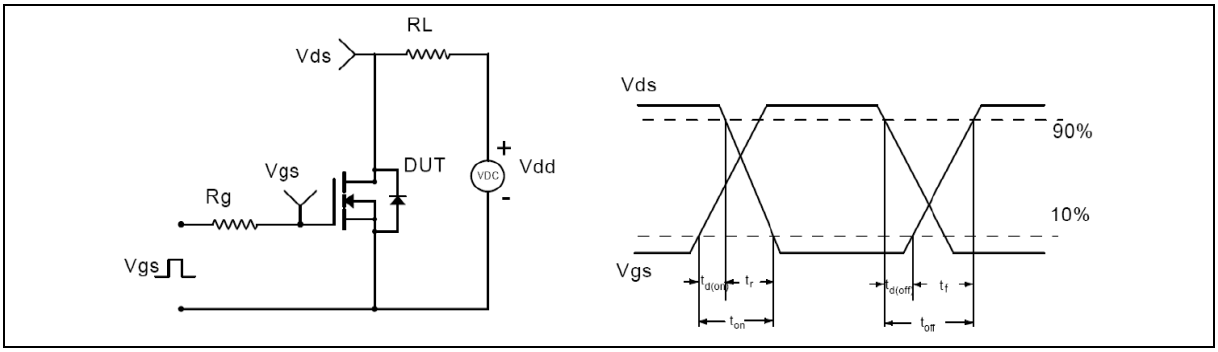

Figure 2. Switching time test circuit & waveforms

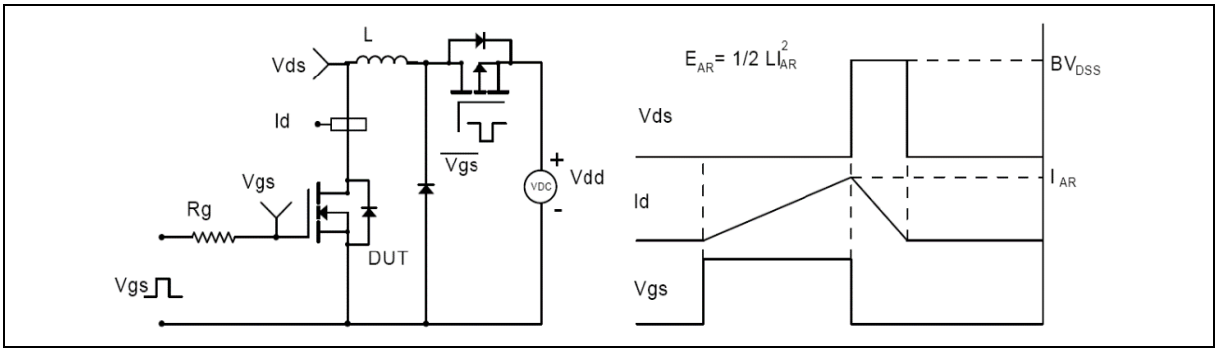

Figure 3. Unclamped inductive switching (UIS) test circuit & waveforms

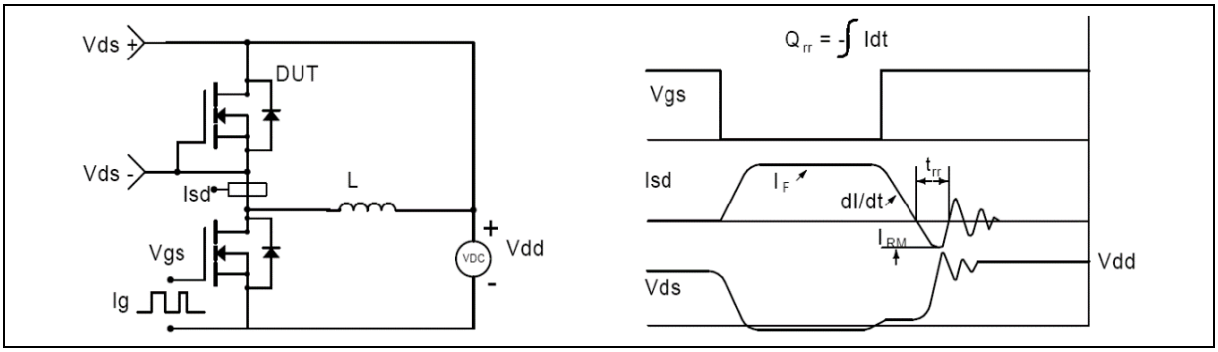

Figure 4. Diode reverse recovery test circuit & waveforms

Oriental Semiconductor © Copyright Reserved V2.0

Package Information

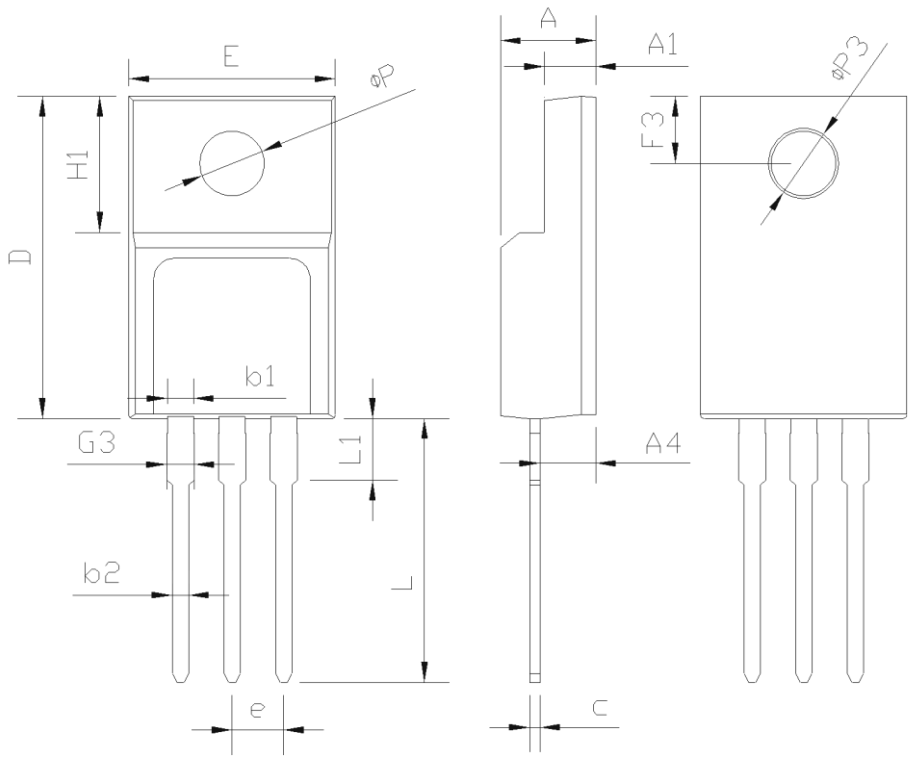

Symbol	mm		
	Min	Nom	Max
E	9.96	10.16	10.36
A	4.50	4.70	4.90
A1	2.34	2.54	2.74
A4	2.56	2.76	2.96
c	0.40	0.50	0.65
D	15.57	15.87	16.17
H1	6.70 REF		
e	2.54 BSC		
L	12.68	12.98	13.28
L1	2.88	3.03	3.18
ΦP	3.03	3.18	3.38
ΦP3	3.15	3.45	3.65
F3	3.15	3.30	3.45
G3	1.25	1.35	1.55
b1	1.18	1.28	1.43
b2	0.70	0.80	0.95

Version 1: TO220F-P outline dimension

Oriental Semiconductor © Copyright Reserved V2.0

Ordering Information

Package Type	Units/ Tube	Tubes/ Inner Box	Units/ Inner Box	Inner Boxes/ Carton Box	Units/ Carton Box
TO220F-P	50	20	1000	6	6000

Product Information

Product	Package	Pb Free	RoHS	Halogen Free
OSG60R150FF	TO220F	yes	yes	yes

Legal Disclaimer

The information given in this document shall in no event be regarded as a guarantee of conditions or characteristics. With respect to any examples or hints given herein, any typical values stated herein and/or any information regarding the application of the device, Oriental Semiconductor hereby disclaims any and all warranties and liabilities of any kind, including without limitation, warranties of non-infringement of intellectual property rights of any third party.

For further information on technology, delivery terms and conditions and prices, please contact the Oriental Semiconductor sales representatives (www.orientalsemi.com).

© Oriental Semiconductor Co.,Ltd. All Rights Reserved

ORIENTAL SEMICONDUCTOR

A Power Semiconductor Innovator