General Description

The GreenMOS® high voltage MOSFET utilizes charge balance technology to achieve outstanding low on-resistance and lower gate charge. It is engineered to minimize conduction loss, provide superior switching performance and robust avalanche capability.

The GreenMOS® Generic series is optimized for extreme switching performance to minimize switching loss. It is tailored for high power density applications to meet the highest efficiency standards.

Features

GreenMOS®

RoHS compliant

- Low $R_{DS(ON)}$ & FOM
- Extremely low switching loss
- Excellent stability and uniformity

Applications

- PC power
- LED lighting
- Telecom power
- Server power
- EV Charger
- Solar/UPS

Key Performance Parameters

Parameter	Value	Unit
$V_{DS,\ min}$ @ $T_{j(max)}$	650	V
$I_{D,\ pulse}$	24	A
$R_{DS(ON)\ ,\ max}$ @ V_{GS}=10V	580	mΩ
Q_g	15.8	nC

Marking Information

Product Name	Package	Marking
OSG60R580DT3F	TO252	OSG60R580DT3

Package & Pin Information



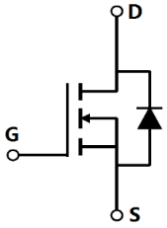

Oriental Semiconductor © Copyright Reserved V1.0

Absolute Maximum Ratings at T_j=25°C unless otherwise noted

Parameter	Symbol	Value	Unit
Drain-source voltage	V_{DS}	600	V
Gate-source voltage	V_{GS}	±30	V
Continuous drain current[1], T_C=25 °C	I_D	8	A
Continuous drain current[1], T_C=100 °C		5.1	
Pulsed drain current[2], T_C=25 °C	$I_{D,\ pulse}$	24	A
Continuous diode forward current[1], T_C=25 °C	I_S	8	A
Diode pulsed current[2], T_C=25 °C	$I_{S,\ pulse}$	24	A
Power dissipation[3], T_C=25 °C	P_D	98	W
Single pulsed avalanche energy[5]	E_{AS}	84	mJ
MOSFET dv/dt ruggedness, V_{DS}=0…480 V	dv/dt	50	V/ns
Reverse diode dv/dt, V_{DS}=0…480 V, I_{SD}≤I_D	dv/dt	15	V/ns
Operation and storage temperature	T_{stg}, T_j	-55 to 150	°C

Thermal Characteristics

Parameter	Symbol	Value	Unit
Thermal resistance, junction-case	$R_{\theta JC}$	1.28	°C/W
Thermal resistance, junction-ambient[4]	$R_{\theta JA}$	62	°C/W

Electrical Characteristics at T_j=25°C unless otherwise specified

Parameter	Symbol	Min.	Typ.	Max.	Unit	Test condition
Drain-source breakdown voltage	BV_{DSS}	600			V	V_{GS}=0 V, I_D=250 μA
		650				V_{GS}=0 V, I_D=250 μA, T_j=150 °C
Gate threshold voltage	$V_{GS(th)}$	3.5		4.5	V	V_{DS}=V_{GS}, I_D=250 μA
Drain-source on-state resistance	$R_{DS(ON)}$		0.47	0.58	Ω	V_{GS}=10 V, I_D=4 A
			1.23			V_{GS}=10 V, I_D=4 A, T_j=150 °C
Gate-source leakage current	I_{GSS}			100	nA	V_{GS}=30 V
				-100		V_{GS}=-30 V
Drain-source leakage current	I_{DSS}			1	μA	V_{DS}=600 V, V_{GS}=0 V
Gate resistance	R_G		29		Ω	f = 1 MHz, Open drain

Oriental Semiconductor © Copyright Reserved V1.0

Dynamic Characteristics

Parameter	Symbol	Min.	Typ.	Max.	Unit	Test condition
Input capacitance	C_{iss}		347		pF	V_{GS}=0 V, V_{DS}=50 V, f=100 kHz
Output capacitance	C_{oss}		29		pF	
Reverse transfer capacitance	C_{rss}		1.8		pF	
Effective output capacitance, energy related	$C_{o(er)}$		18		pF	V_{GS} = 0 V, V_{DS} = 0V-400V
Effective output capacitance, time related	$C_{o(tr)}$		98		pF	
Turn-on delay time	$t_{d(on)}$		22		ns	V_{GS}=10 V, V_{DS}=400 V, R_G=2 Ω, I_D=8 A
Rise time	t_r		21		ns	
Turn-off delay time	$t_{d(off)}$		64		ns	
Fall time	t_f		16.6		ns	

Gate Charge Characteristics

Parameter	Symbol	Min.	Typ.	Max.	Unit	Test condition
Total gate charge	Q_g		15.8		nC	V_{GS}=10 V, V_{DS}=400 V, I_D=8 A
Gate-source charge	Q_{gs}		2.6		nC	
Gate-drain charge	Q_{gd}		7.9		nC	
Gate plateau voltage	$V_{plateau}$		6.3		V	

Body Diode Characteristics

Parameter	Symbol	Min.	Typ.	Max.	Unit	Test condition
Diode forward voltage	V_{SD}			1.3	V	I_S=8 A, V_{GS}=0 V
Reverse recovery time	t_{rr}		252		ns	V_R=400 V, I_S=8 A, di/dt=100 A/μs
Reverse recovery charge	Q_{rr}		2.2		μC	
Peak reverse recovery current	I_{rrm}		17		A	

Note

1) Calculated continuous current based on maximum allowable junction temperature.
2) Repetitive rating; pulse width limited by max. junction temperature.
3) Pd is based on max. junction temperature, using junction-case thermal resistance.
4) The value of $R_{\theta JA}$ is measured with the device mounted on 1 in square FR-4 board with 2oz. Copper, in a still air environment with T_a=25 °C.
5) V_{DD}=100 V, V_{GS}=10 V, L=75 mH, starting T_j=25 °C.

Oriental Semiconductor © Copyright Reserved V1.0

Electrical Characteristics Diagrams

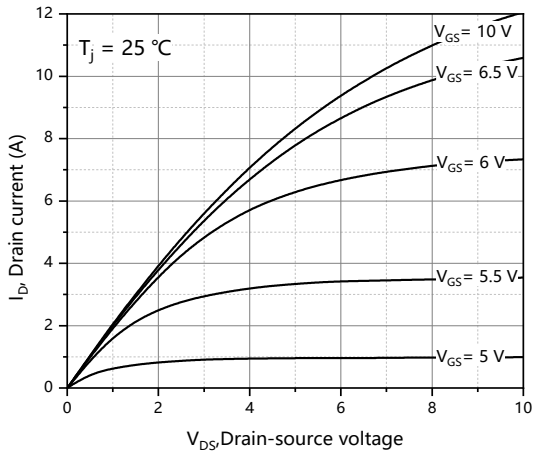

Figure 1. Typ. output characteristics

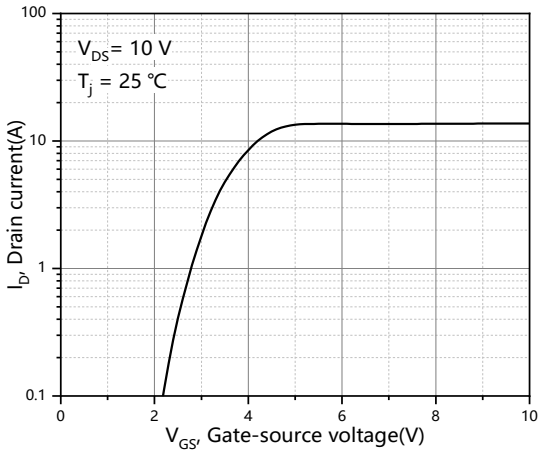

Figure 2. Typ. transfer characteristics

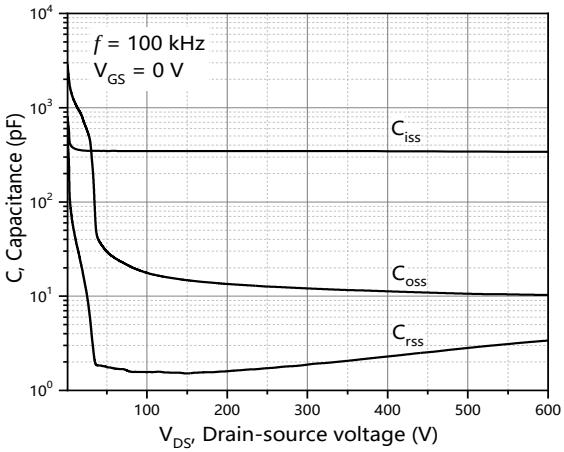

Figure 3. Typ. capacitances

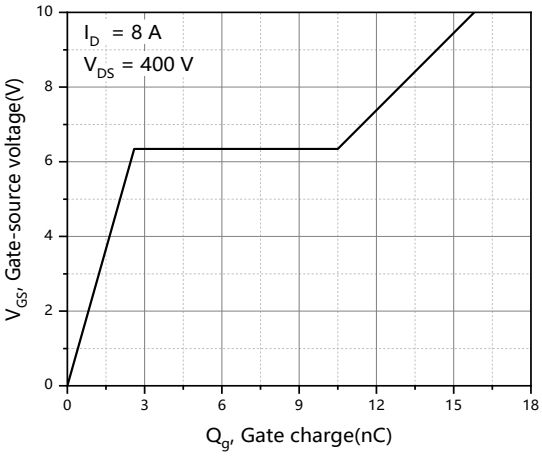

Figure 4. Typ. gate charge

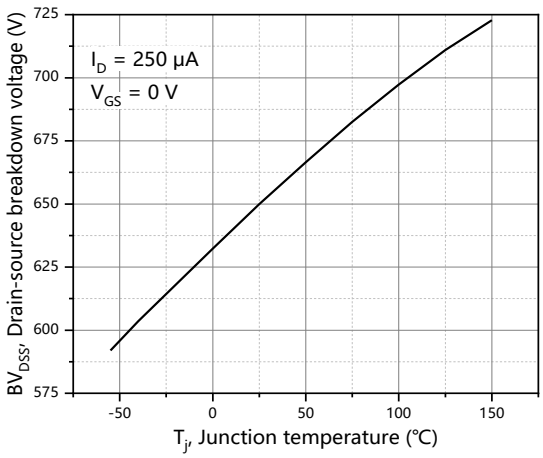

Figure 5. Drain-source breakdown voltage

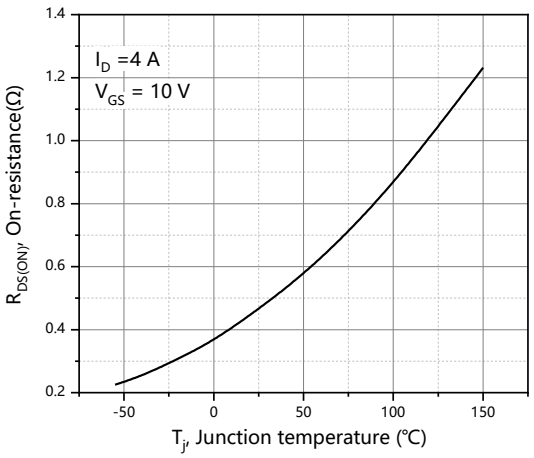

Figure 6. Drain-source on-state resistance

Oriental Semiconductor © Copyright Reserved V1.0

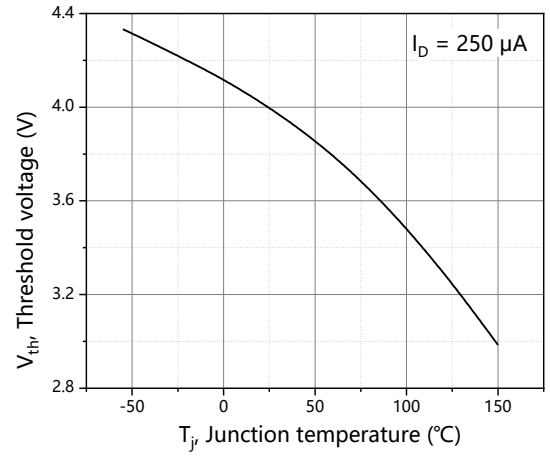

Figure 7. Threshold voltage

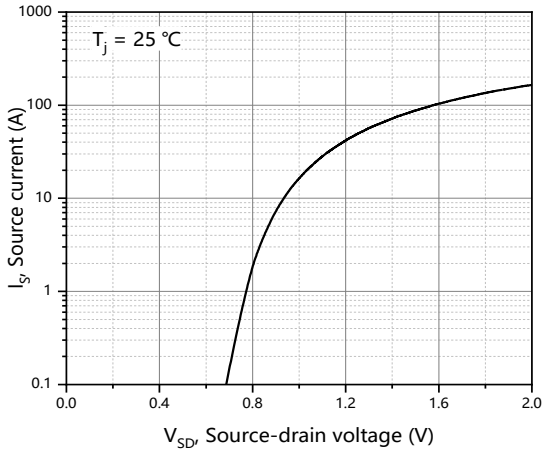

Figure 8. Forward characteristic of body diode

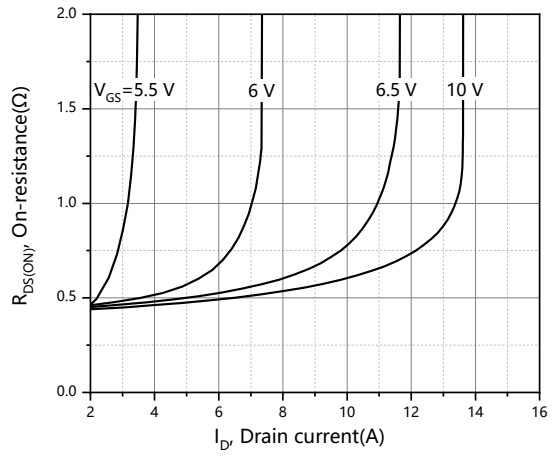

Figure 9. Drain-source on-state resistance

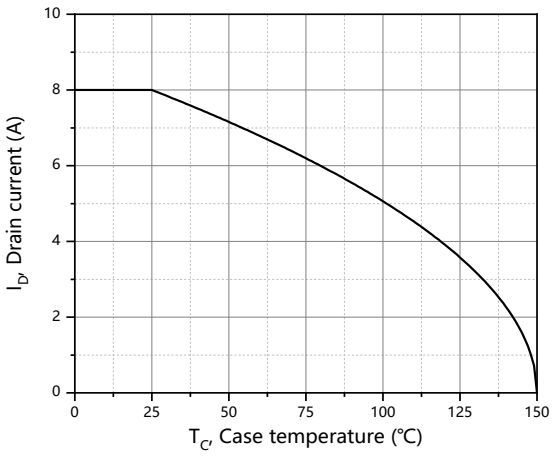

Figure 10. Drain current

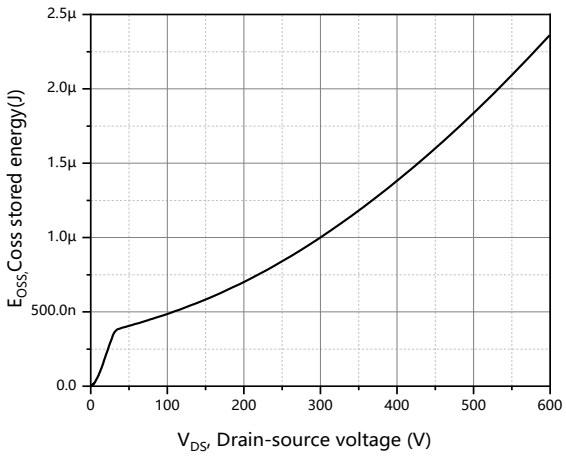

Figure 11. Typ. Coss stored energy

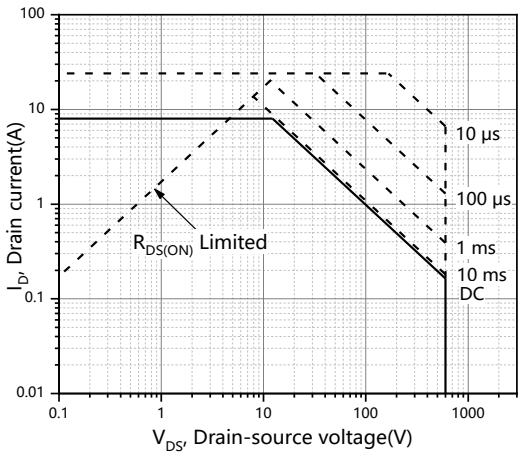

Figure 12. Safe operation area for T_C=25℃

Oriental Semiconductor © Copyright Reserved V1.0

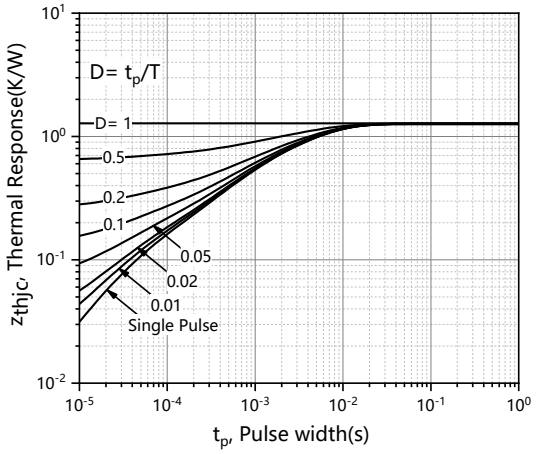

Figure 13. Max transient thermal impedance

Test circuits and waveforms

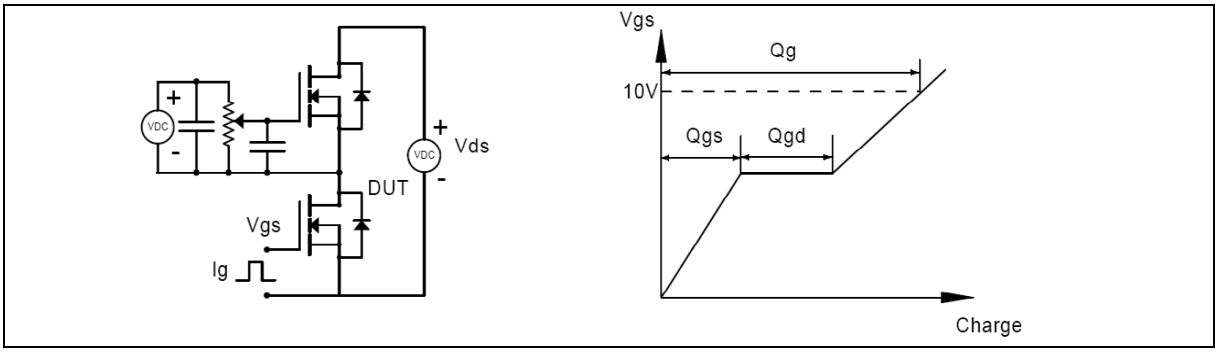

Figure 1. Gate charge test circuit & waveform

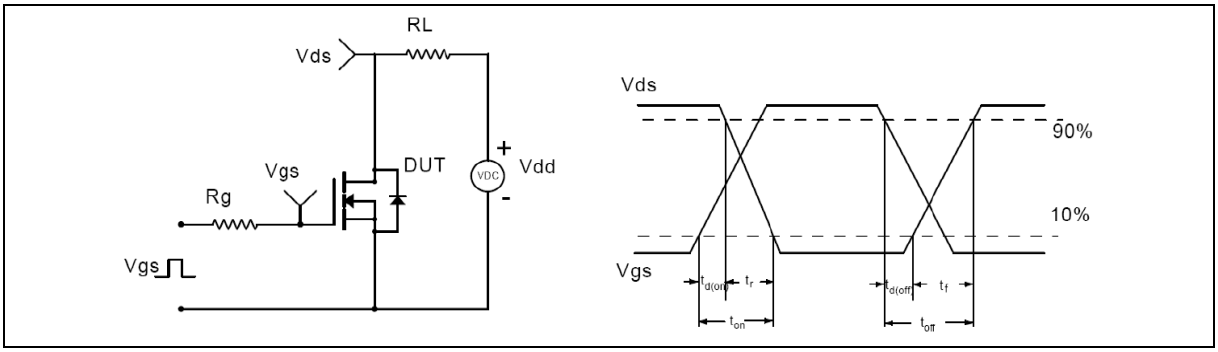

Figure 2. Switching time test circuit & waveforms

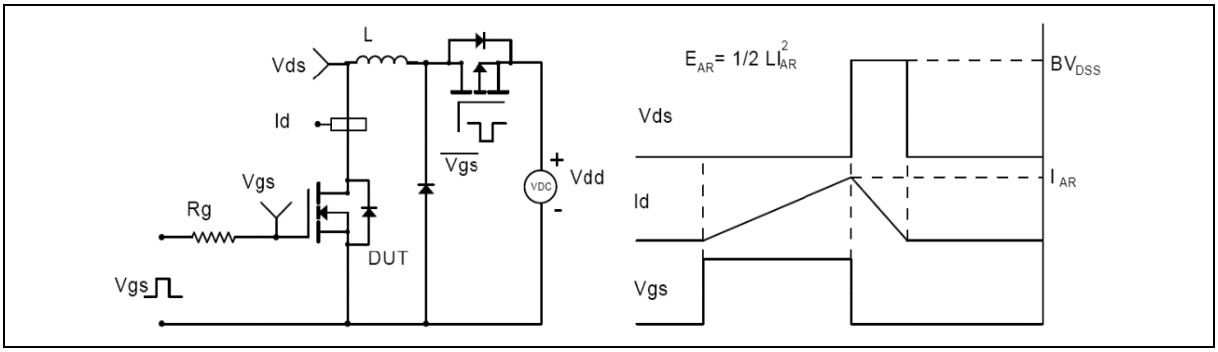

Figure 3. Unclamped inductive switching (UIS) test circuit & waveforms

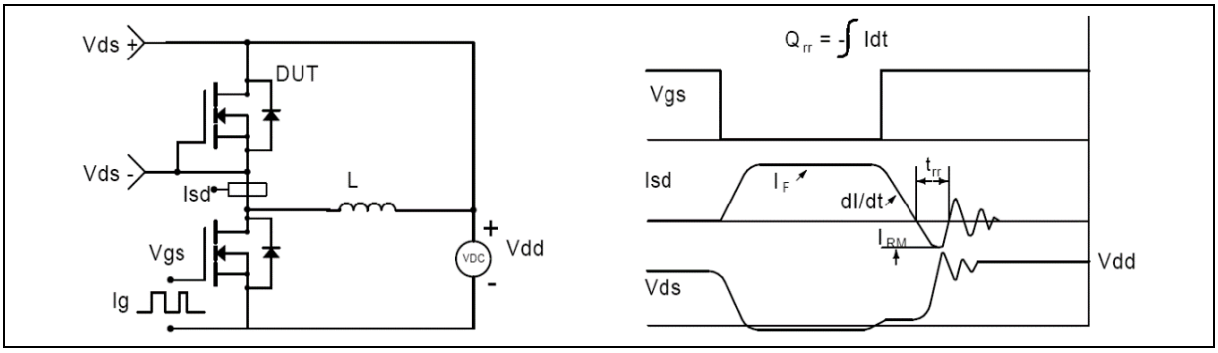

Figure 4. Diode reverse recovery test circuit & waveforms

Oriental Semiconductor © Copyright Reserved V1.0

Package Information

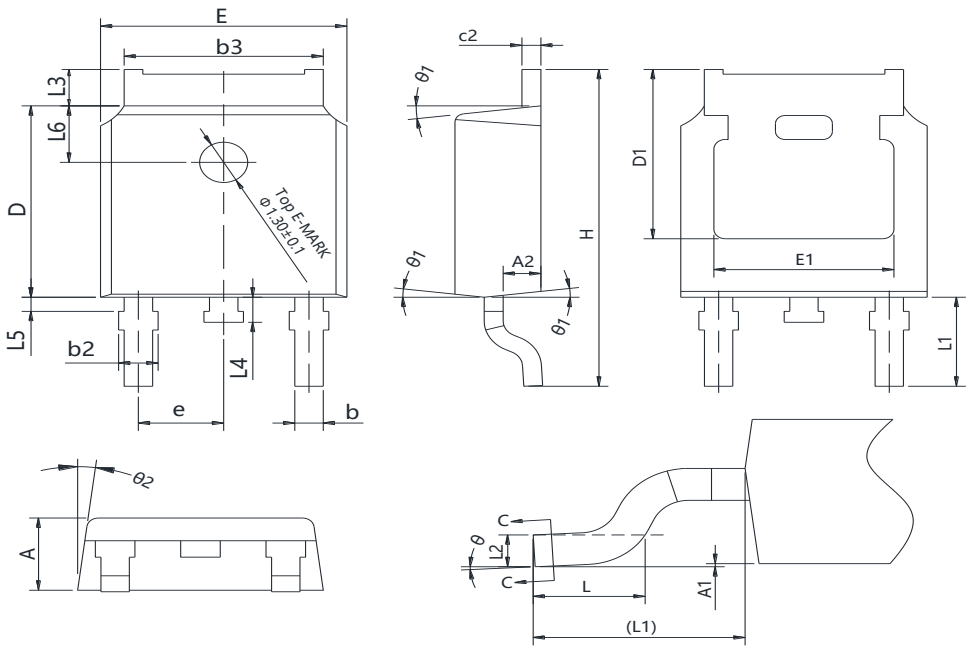

Symbol	mm		
	Min	Nom	Max
A	2.20	2.30	2.38
A1	0.00	-	0.10
A2	0.90	1.01	1.10
b	0.72	-	0.85
b1	0.71	0.76	0.81
b2	0.72	-	0.90
b3	5.13	5.33	5.46
c	0.47	-	0.60
c1	0.46	0.51	0.56
c2	0.47	-	0.60
D	6.00	6.10	6.20
D1	5.25	-	-
E	6.50	6.60	6.70
E1	4.70	-	-
e	2.186	2.286	2.386
H	9.80	10.10	10.40
L	1.40	1.50	1.70
L1	2.90 REF		
L2	0.508 BSC		
L3	0.90	-	1.25
L4	0.60	0.80	1.00
L5	0.15	-	0.75
L6	1.80 REF		
θ	0°	-	8°
θ1	5°	7°	9°
θ2	5°	7°	9°

Version 1: TO252-J package outline dimension

Oriental Semiconductor © Copyright Reserved V1.0

Ordering Information

Package Type	Units/ Reel	Reels/ Inner Box	Units/ Inner Box	Inner Boxes/ Carton Box	Units/ Carton Box
TO252-J	2500	2	5000	5	25000

Product Information

Product	Package	Pb Free	RoHS	Halogen Free
OSG60R580DT3F	TO252	yes	yes	yes

Legal Disclaimer

The information given in this document shall in no event be regarded as a guarantee of conditions or characteristics. With respect to any examples or hints given herein, any typical values stated herein and/or any information regarding the application of the device, Oriental Semiconductor hereby disclaims any and all warranties and liabilities of any kind, including without limitation, warranties of non-infringement of intellectual property rights of any third party.

For further information on technology, delivery terms and conditions and prices, please contact the Oriental Semiconductor sales representatives (www.orientalsemi.com).

© Oriental Semiconductor Co.,Ltd. All Rights Reserved

ORIENTAL SEMICONDUCTOR

A Power Semiconductor Innovator