## General Description

The GreenMOS® high voltage MOSFET utilizes charge balance technology to achieve outstanding low on-resistance and lower gate charge. It is engineered to minimize conduction loss, provide superior switching performance and robust avalanche capability.

The GreenMOS® Generic series is optimized for extreme switching performance to minimize switching loss. It is tailored for high power density applications to meet the highest efficiency standards.

## Features

GreenMOS®

RoHS compliant

- Low $R_{DS(ON)}$ & FOM
- Extremely low switching loss
- Excellent stability and uniformity

## Applications

- PC power
- LED lighting
- Telecom power
- Server power
- EV Charger
- Solar/UPS

## Key Performance Parameters

| Parameter | Value | Unit |
|---|---|---|
| $V_{DS,\ min}$ @ $T_{j(max)}$ | 700 | V |
| $I_{D,\ pulse}$ | 141 | A |
| $R_{DS(ON)\ ,\ max}$ @ $V_{GS}$=10V | 70 | mΩ |
| $Q_g$ | 57.1 | nC |

## Marking Information

| Product Name | Package | Marking |
|---|---|---|
| OSG65R070FT3F | TO220F | OSG65R070FT3 |

## Package & Pin Information




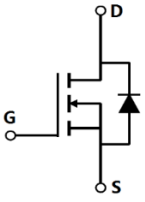


Oriental Semiconductor © Copyright Reserved V1.0

## Absolute Maximum Ratings at $T_j$=25°C unless otherwise noted

| Parameter | Symbol | Value | Unit |
|---|---|---|---|
| Drain-source voltage | $V_{DS}$ | 650 | V |
| Gate-source voltage | $V_{GS}$ | ±30 | V |
| Continuous drain current[1], $T_C$=25 °C | $I_D$ | 47 | A |
| Continuous drain current[1], $T_C$=100 °C | | 29.7 | |
| Pulsed drain current[2], $T_C$=25 °C | $I_{D,\ pulse}$ | 141 | A |
| Continuous diode forward current[1], $T_C$=25 °C | $I_S$ | 47 | A |
| Diode pulsed current[2], $T_C$=25 °C | $I_{S,\ pulse}$ | 141 | A |
| Power dissipation[3], $T_C$=25 °C | $P_D$ | 46 | W |
| Single pulsed avalanche energy[5] | $E_{AS}$ | 900 | mJ |
| MOSFET dv/dt ruggedness, $V_{DS}$=0…480 V | dv/dt | 50 | V/ns |
| Reverse diode dv/dt, $V_{DS}$=0…480 V, $I_{SD}$≤$I_D$ | dv/dt | 15 | V/ns |
| Operation and storage temperature | $T_{stg}$, $T_j$ | -55 to 150 | °C |

## Thermal Characteristics

| Parameter | Symbol | Value | Unit |
|---|---|---|---|
| Thermal resistance, junction-case | $R_{\theta JC}$ | 2.73 | °C/W |
| Thermal resistance, junction-ambient[4] | $R_{\theta JA}$ | 62.5 | °C/W |

## Electrical Characteristics at $T_j$=25°C unless otherwise specified

| Parameter | Symbol | Min. | Typ. | Max. | Unit | Test condition |
|---|---|---|---|---|---|---|
| Drain-source breakdown voltage | $BV_{DSS}$ | 650 | | | V | $V_{GS}$=0 V, $I_D$=1 mA |
| | | 700 | | | | $V_{GS}$=0 V, $I_D$=1 mA, $T_j$=150 °C |
| Gate threshold voltage | $V_{GS(th)}$ | 3.5 | | 4.5 | V | $V_{DS}$=$V_{GS}$, $I_D$=1 mA |
| Drain-source on-state resistance | $R_{DS(ON)}$ | | 59 | 70 | mΩ | $V_{GS}$=10 V, $I_D$=23.5 A |
| | | | 156 | | | $V_{GS}$=10 V, $I_D$=23.5 A, $T_j$=150 °C |
| Gate-source leakage current | $I_{GSS}$ | | | 100 | nA | $V_{GS}$=30 V |
| | | | | -100 | | $V_{GS}$=-30 V |
| Drain-source leakage current | $I_{DSS}$ | | | 1 | μA | $V_{DS}$=650 V, $V_{GS}$=0 V |
| Gate resistance | $R_G$ | | 8.5 | | Ω | f= 1 MHz, Open drain |

Oriental Semiconductor © Copyright Reserved V1.0

## Dynamic Characteristics

| Parameter | Symbol | Min. | Typ. | Max. | Unit | Test condition |
|---|---|---|---|---|---|---|
| Input capacitance | $C_{iss}$ | | 2332 | | pF | $V_{GS}$=0 V, $V_{DS}$=50 V, $f$=100 kHz |
| Output capacitance | $C_{oss}$ | | 173 | | pF | |
| Reverse transfer capacitance | $C_{rss}$ | | 3.8 | | pF | |
| Effective output capacitance, energy related | $C_{o(er)}$ | | 106 | | pF | $V_{GS}$ = 0 V, $V_{DS}$ = 0 V-400V |
| Effective output capacitance, time related | $C_{o(tr)}$ | | 621 | | pF | |
| Turn-on delay time | $t_{d(on)}$ | | 31.8 | | ns | $V_{GS}$=10 V, $V_{DS}$=400 V, $R_G$=2 Ω, $I_D$=20 A |
| Rise time | $t_r$ | | 42.6 | | ns | |
| Turn-off delay time | $t_{d(off)}$ | | 100.8 | | ns | |
| Fall time | $t_f$ | | 6.2 | | ns | |

## Gate Charge Characteristics

| Parameter | Symbol | Min. | Typ. | Max. | Unit | Test condition |
|---|---|---|---|---|---|---|
| Total gate charge | $Q_g$ | | 57.1 | | nC | $V_{GS}$=10 V, $V_{DS}$=400 V, $I_D$=20 A |
| Gate-source charge | $Q_{gs}$ | | 11.2 | | nC | |
| Gate-drain charge | $Q_{gd}$ | | 23.4 | | nC | |
| Gate plateau voltage | $V_{plateau}$ | | 5.7 | | V | |

## Body Diode Characteristics

| Parameter | Symbol | Min. | Typ. | Max. | Unit | Test condition |
|---|---|---|---|---|---|---|
| Diode forward voltage | $V_{SD}$ | | | 1.3 | V | $I_S$=47 A, $V_{GS}$=0 V |
| Reverse recovery time | $t_{rr}$ | | 372 | | ns | $V_R$=400V, $I_S$=20 A, di/dt=100 A/μs |
| Reverse recovery charge | $Q_{rr}$ | | 5.4 | | μC | |
| Peak reverse recovery current | $I_{rrm}$ | | 27 | | A | |

**Note**

1) Calculated continuous current based on maximum allowable junction temperature.
2) Repetitive rating; pulse width limited by max. junction temperature.
3) Pd is based on max. junction temperature, using junction-case thermal resistance.
4) The value of $R_{\theta JA}$ is measured with the device mounted on 1 in 2 FR-4 board with 2oz. Copper, in a still air environment with $T_a$=25 °C.
5) $V_{DD}$=100 V, $V_{GS}$=10 V, L=75 mH, starting $T_j$=25 °C.

Oriental Semiconductor © Copyright Reserved V1.0

## Electrical Characteristics Diagrams

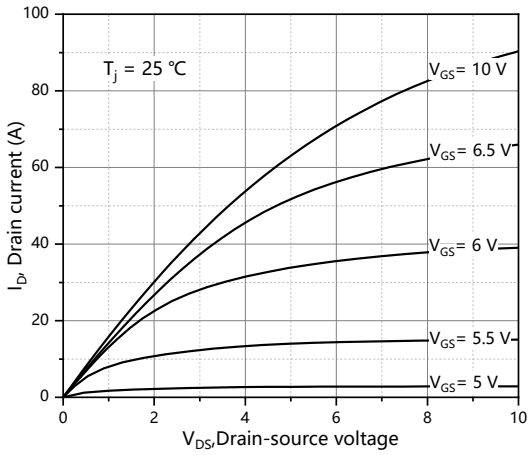


**Figure 1. Typ. output characteristics**

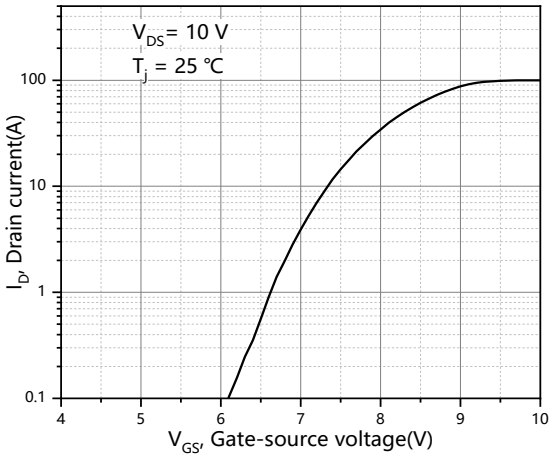


**Figure 2. Typ. transfer characteristics**

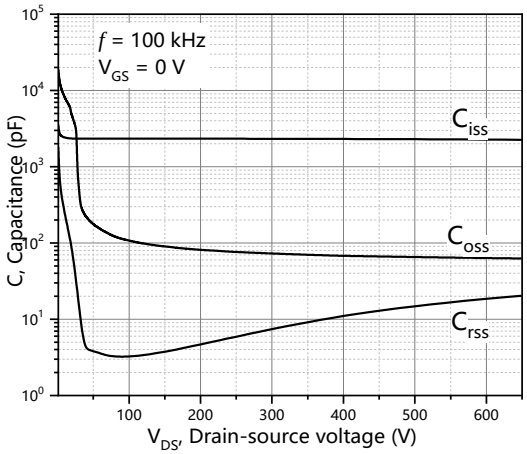


**Figure 3. Typ. capacitances**

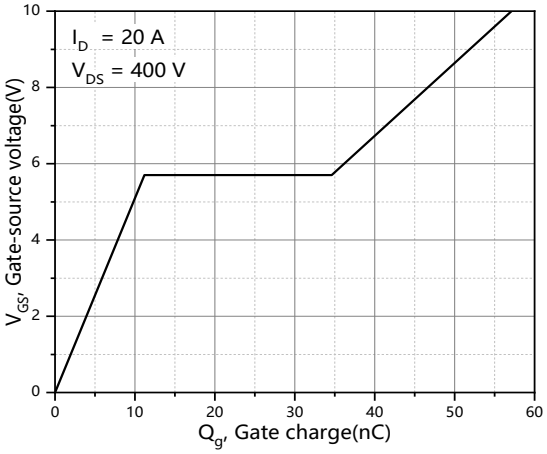


**Figure 4. Typ. gate charge**

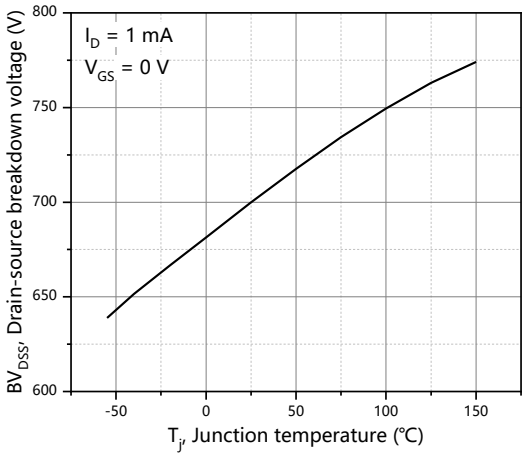


**Figure 5. Drain-source breakdown voltage**

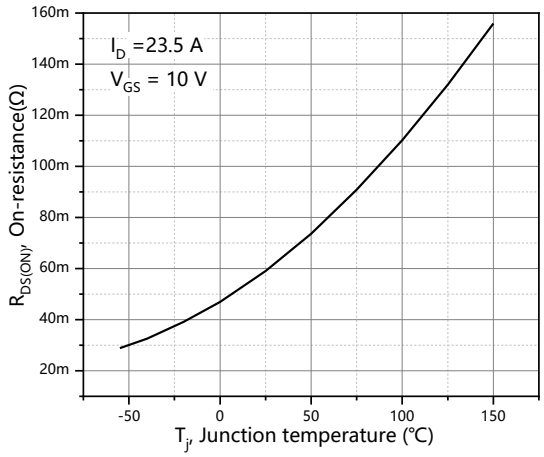


**Figure 6. Drain-source on-state resistance**

Oriental Semiconductor © Copyright Reserved V1.0

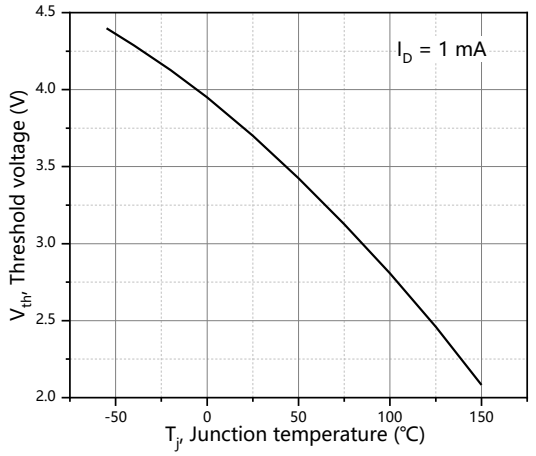


**Figure 7. Threshold voltage**

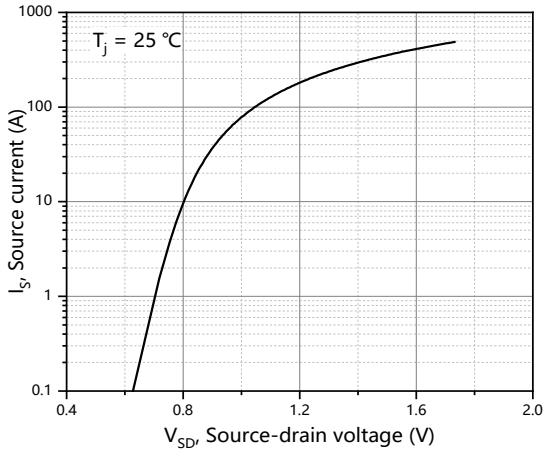


**Figure 8. Forward characteristic of body diode**

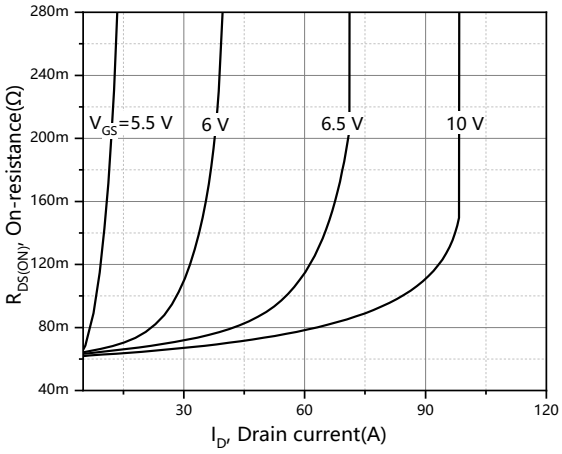


**Figure 9. Drain-source on-state resistance**

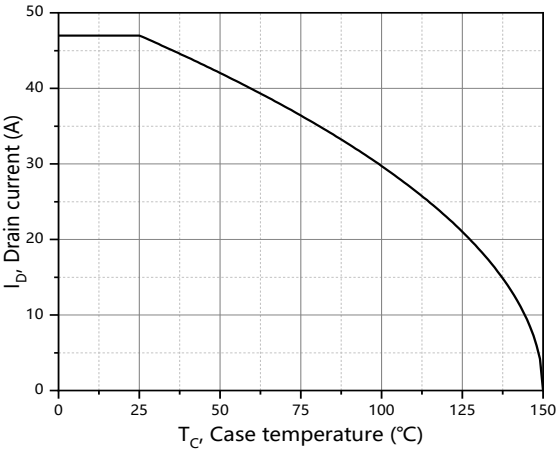


**Figure 10. Drain current**

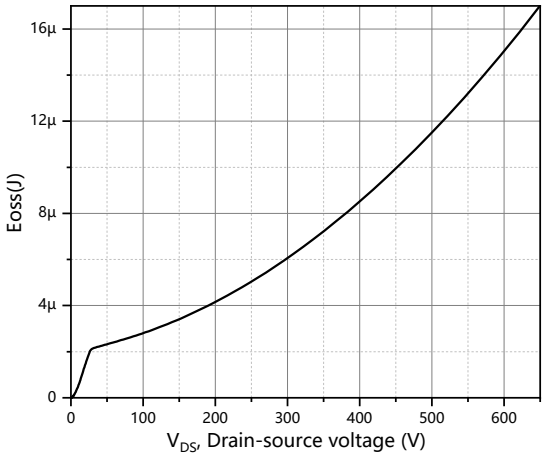


**Figure 11. Typ. coss stored energy**

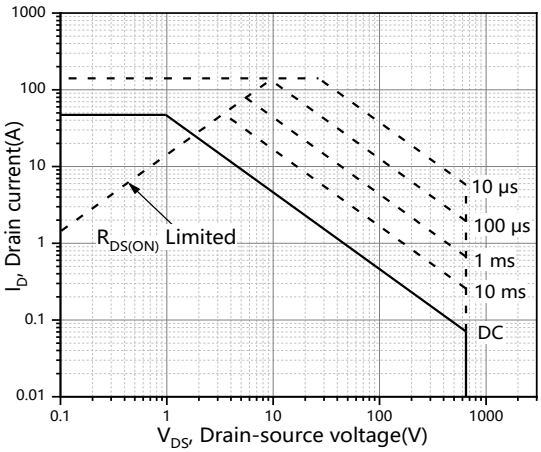


**Figure 12. Safe operation area for TC=25 ℃**

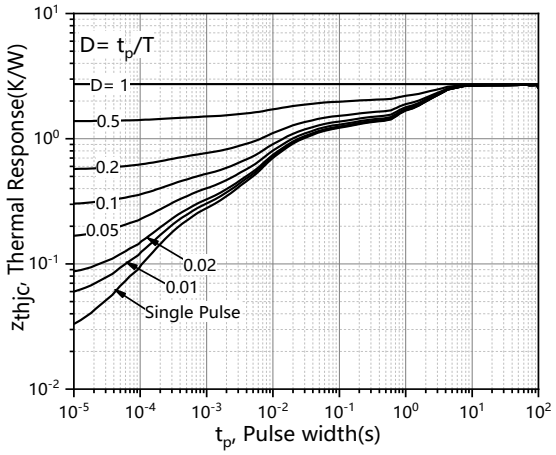


**Figure 13. Max transient thermal impedance**

Oriental Semiconductor © Copyright Reserved V1.0

## Test circuits and waveforms

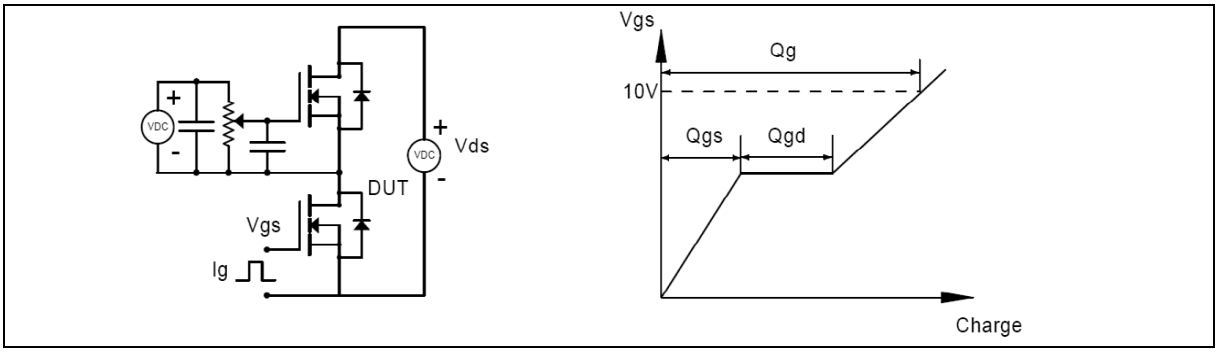


**Figure 1. Gate charge test circuit & waveform**

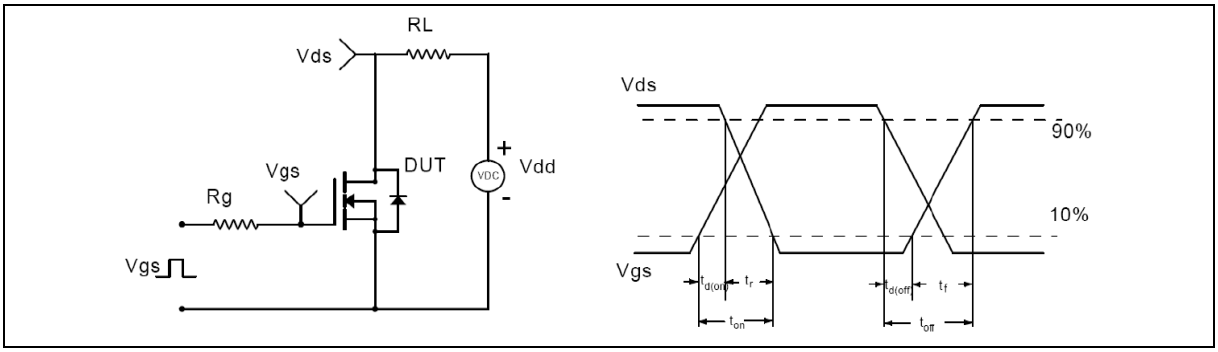


**Figure 2. Switching time test circuit & waveforms**

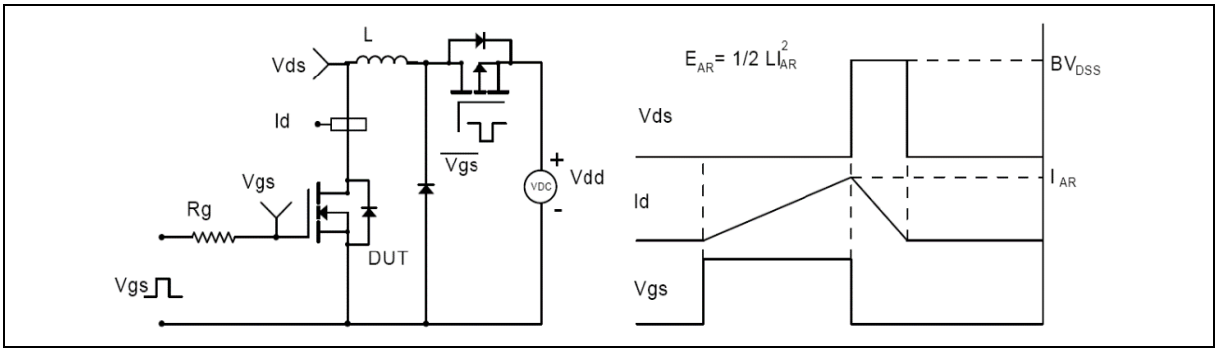


**Figure 3. Unclamped inductive switching (UIS) test circuit & waveforms**

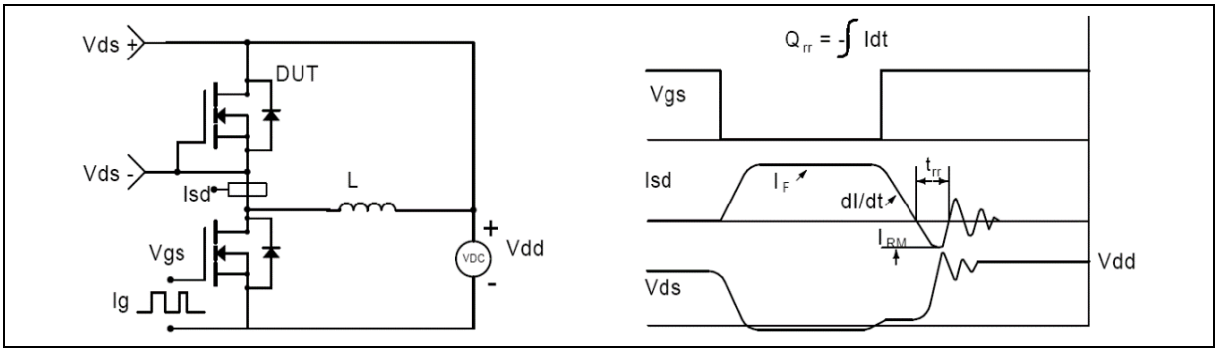


**Figure 4. Diode reverse recovery test circuit & waveforms**

## Package Information

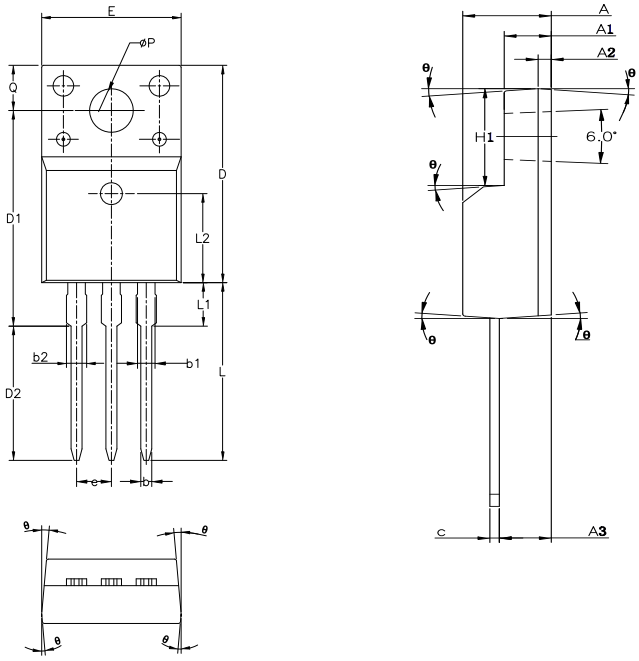


| Symbol | mm | | |
|---|---|---|---|
| | Min | Nom | Max |
| A | 4.50 | 4.70 | 4.83 |
| A1 | 2.34 | 2.54 | 2.74 |
| A2 | | 0.70 REF | |
| A3 | 2.56 | 2.76 | 2.93 |
| b | 0.70 | - | 0.90 |
| b1 | 1.18 | - | 1.38 |
| b2 | - | - | 1.47 |
| c | 0.45 | 0.50 | 0.60 |
| D | 15.67 | 15.87 | 16.07 |
| D1 | 15.55 | 15.75 | 15.95 |
| D2 | 9.60 | 9.80 | 10.00 |
| E | 9.96 | 10.16 | 10.36 |
| e | | 2.54 BSC | |
| H1 | 6.48 | 6.68 | 6.88 |
| L | 12.68 | 12.98 | 13.28 |
| L1 | - | - | 3.50 |
| L2 | | 6.50 REF | |
| ΦP | 3.08 | 3.18 | 3.28 |
| Q | 3.20 | - | 3.40 |
| θ | 1º | 3º | 5º |

Version 1: TO220F-J package outline dimension

Oriental Semiconductor © Copyright Reserved V1.0

## Ordering Information

| Package Type | Units/ Tube | Tubes/ Inner Box | Units/ Inner Box | Inner Boxes/ Carton Box | Units/ Carton Box |
|---|---|---|---|---|---|
| TO220F-J | 50 | 20 | 1000 | 5 | 5000 |

## Product Information

| Product | Package | Pb Free | RoHS | Halogen Free |
|---|---|---|---|---|
| OSG65R070FT3F | TO220F | yes | yes | yes |

## Legal Disclaimer

The information given in this document shall in no event be regarded as a guarantee of conditions or characteristics. With respect to any examples or hints given herein, any typical values stated herein and/or any information regarding the application of the device, Oriental Semiconductor hereby disclaims any and all warranties and liabilities of any kind, including without limitation, warranties of non-infringement of intellectual property rights of any third party.

For further information on technology, delivery terms and conditions and prices, please contact the Oriental Semiconductor sales representatives (www.orientalsemi.com).

**© Oriental Semiconductor Co.,Ltd. All Rights Reserved**

ORIENTAL SEMICONDUCTOR

*A Power Semiconductor Innovator*