General Description

The GreenMOS® high voltage MOSFET utilizes charge balance technology to achieve outstanding low on-resistance and lower gate charge. It is engineered to minimize conduction loss, provide superior switching performance and robust avalanche capability.

The GreenMOS® Generic series is optimized for extreme switching performance to minimize switching loss. It is tailored for high power density applications to meet the highest efficiency standards.

Features

GreenMOS®

RoHS compliant

- Low $R_{DS(on)}$ & FOM
- Extremely low switching loss
- Excellent stability and uniformity

Applications

- PC power
- LED lighting
- Telecom power
- Server power
- EV Charger
- Solar/UPS

Key Performance Parameters

Parameter	Value	Unit
$V_{DS,\ min}$ @ $T_{j(max)}$	700	V
$I_{D,\ pulse}$	33	A
$R_{DS(ON)\ ,\ max}$ @ V_{GS}=10V	380	mΩ
Q_g	12.5	nC

Marking Information

Product Name	Package	Marking
OSG65R380FF	TO220F	OSG65R380F

Package & Pin Information



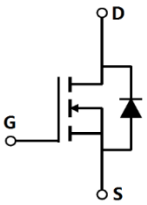

Oriental Semiconductor © Copyright Reserved V2.0

Absolute Maximum Ratings at T_j=25°C unless otherwise noted

Parameter	Symbol	Value	Unit
Drain-source voltage	V_{DS}	650	V
Gate-source voltage	V_{GS}	±30	V
Continuous drain current[1], T_C=25 °C	I_D	11	A
Continuous drain current[1], T_C=100 °C		7	
Pulsed drain current[2], T_C=25 °C	$I_{D,\ pulse}$	33	A
Continuous diode forward current[1], T_C=25 °C	I_S	11	A
Diode pulsed current[2], T_C=25 °C	$I_{S,\ pulse}$	33	A
Power dissipation[3] , T_C=25 °C	P_D	31	W
Single pulsed avalanche energy[5]	E_{AS}	200	mJ
MOSFET dv/dt ruggedness, V_{DS}=0…480 V	dv/dt	50	V/ns
Reverse diode dv/dt, V_{DS}=0…480 V, I_{SD}≤I_D	dv/dt	15	V/ns
Operation and storage temperature	T_{stg}, T_j	-55 to 150	°C

Thermal Characteristics

Parameter	Symbol	Value	Unit
Thermal resistance, junction-case	$R_{\theta JC}$	4	°C/W
Thermal resistance, junction-ambient[4]	$R_{\theta JA}$	62.5	°C/W

Electrical Characteristics at T_j=25°C unless otherwise specified

Parameter	Symbol	Min.	Typ.	Max.	Unit	Test condition
Drain-source breakdown voltage	BV_{DSS}	650			V	V_{GS}=0 V, I_D=250 μA
		700	770			V_{GS}=0 V, I_D=250 μA, T_j=150 °C
Gate threshold voltage	$V_{GS(th)}$	2.9		3.9	V	V_{DS}=V_{GS}, I_D=250 μA
Drain-source on-state resistance	$R_{DS(ON)}$		0.35	0.38	Ω	V_{GS}=10 V, I_D=5.5 A
			0.89			V_{GS}=10 V, I_D=5.5 A, T_j=150 °C
Gate-source leakage current	I_{GSS}			100	nA	V_{GS}=30 V
				-100		V_{GS}=-30 V
Drain-source leakage current	I_{DSS}			1	μA	V_{DS}=650 V, V_{GS}=0 V

Oriental Semiconductor © Copyright Reserved V2.0

Dynamic Characteristics

Parameter	Symbol	Min.	Typ.	Max.	Unit	Test condition
Input capacitance	C_{iss}		743.4		pF	V_{GS}=0 V, V_{DS}=50 V, f=100 kHz
Output capacitance	C_{oss}		63.3		pF	
Reverse transfer capacitance	C_{rss}		6.0		pF	
Turn-on delay time	$t_{d(on)}$		20.3		ns	V_{GS}=10 V, V_{DS}=400 V, R_G=2 Ω, I_D=6 A
Rise time	t_r		5.4		ns	
Turn-off delay time	$t_{d(off)}$		29.5		ns	
Fall time	t_f		4.4		ns	

Gate Charge Characteristics

Parameter	Symbol	Min.	Typ.	Max.	Unit	Test condition
Total gate charge	Q_g		12.5		nC	V_{GS}=10 V, V_{DS}=400 V, I_D=6 A
Gate-source charge	Q_{gs}		3.2		nC	
Gate-drain charge	Q_{gd}		4.8		nC	
Gate plateau voltage	$V_{plateau}$		5.7		V	

Body Diode Characteristics

Parameter	Symbol	Min.	Typ.	Max.	Unit	Test condition
Diode forward voltage	V_{SD}			1.3	V	I_S=11 A, V_{GS}=0 V
Reverse recovery time	t_{rr}		228.6		ns	I_S=6 A, di/dt=100 A/μs
Reverse recovery charge	Q_{rr}		2.3		μC	
Peak reverse recovery current	I_{rrm}		20.4		A	

Note

1) Calculated continuous current based on maximum allowable junction temperature.
2) Repetitive rating; pulse width limited by max. junction temperature.
3) Pd is based on max. junction temperature, using junction-case thermal resistance.
4) V_{DD}=100 V, V_{GS}=10 V, L=80 mH, starting T_j=25 °C.

Oriental Semiconductor © Copyright Reserved V2.0

Electrical Characteristics Diagrams

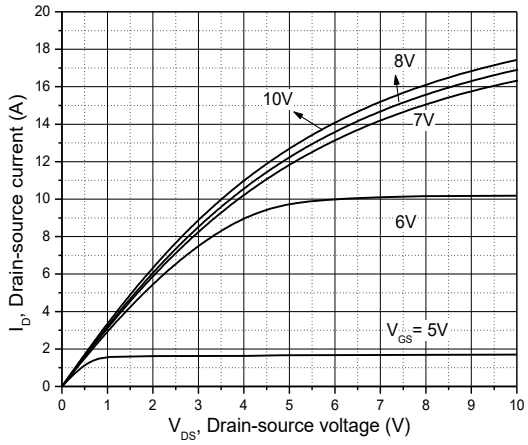

Figure 1. Typ. output characteristics

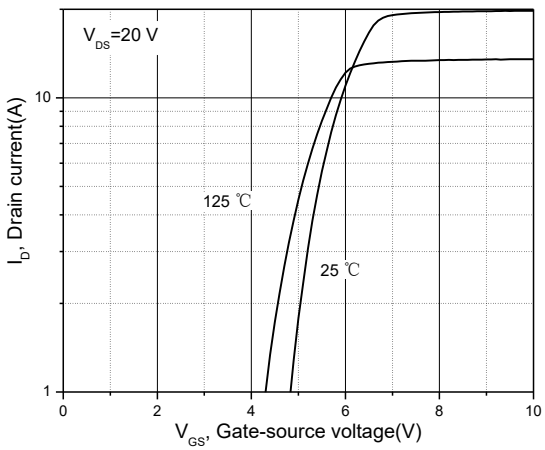

Figure 2. Typ. transfer characteristics

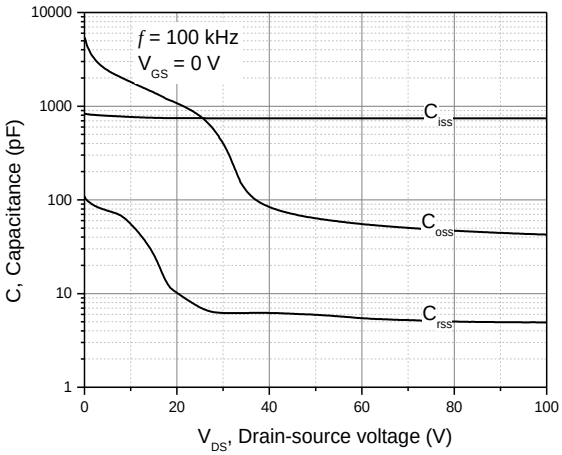

Figure 3. Typ. capacitances

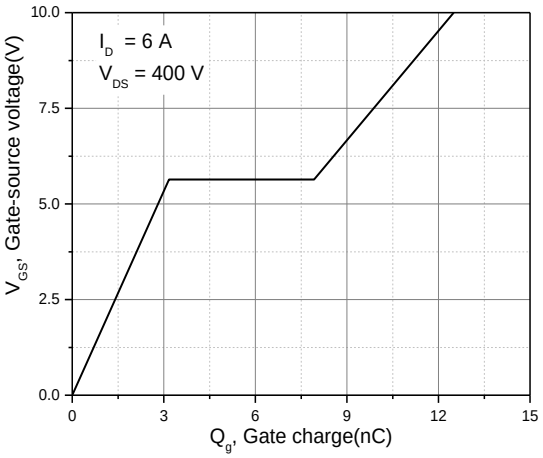

Figure 4. Typ. gate charge

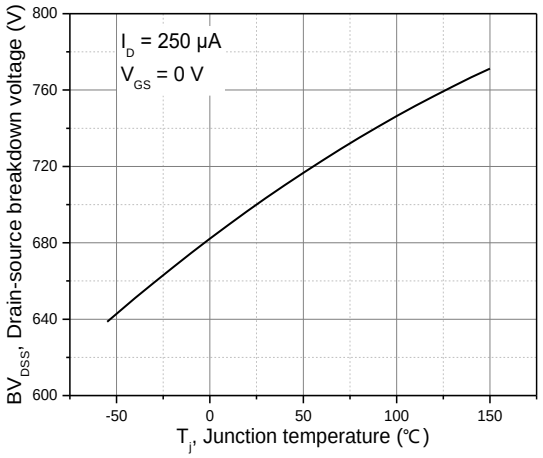

Figure 5. Drain-source breakdown voltage

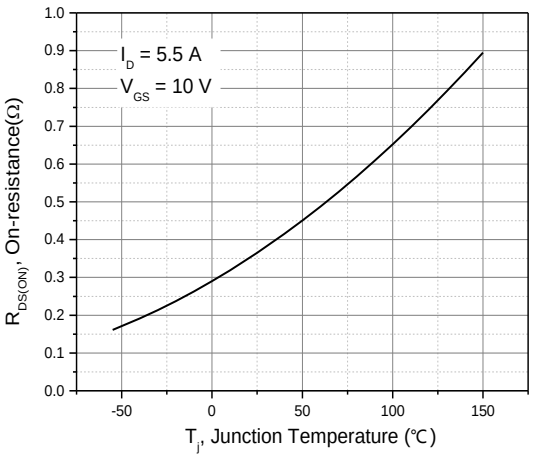

Figure 6. Drain-source on-state resistance

Oriental Semiconductor © Copyright Reserved V2.0

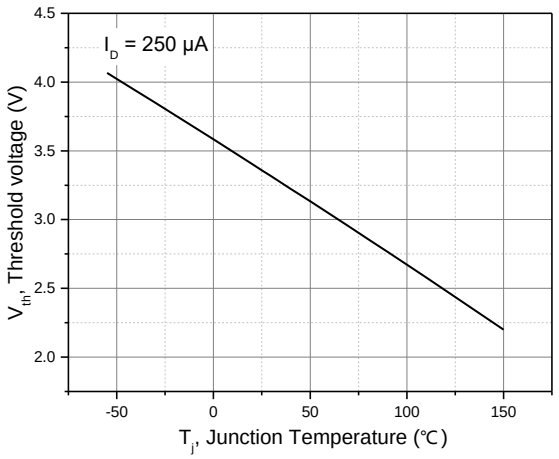

Figure 7. Threshold voltage

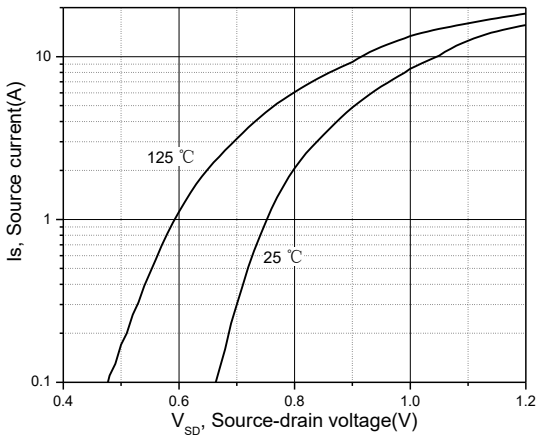

Figure 8. Forward characteristic of body diode

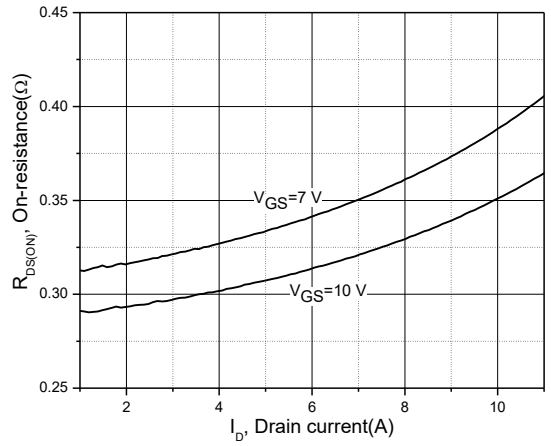

Figure 9. Drain-source on-state resistance

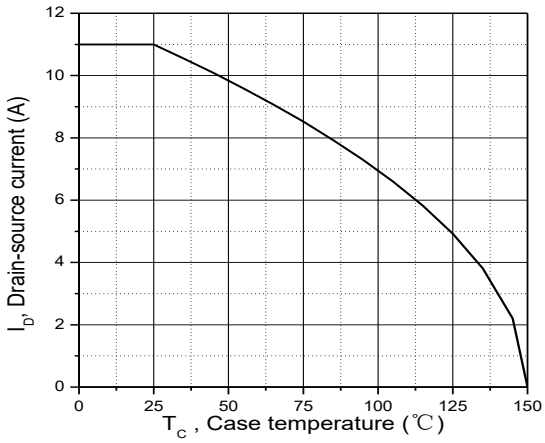

Figure 10. Drain current

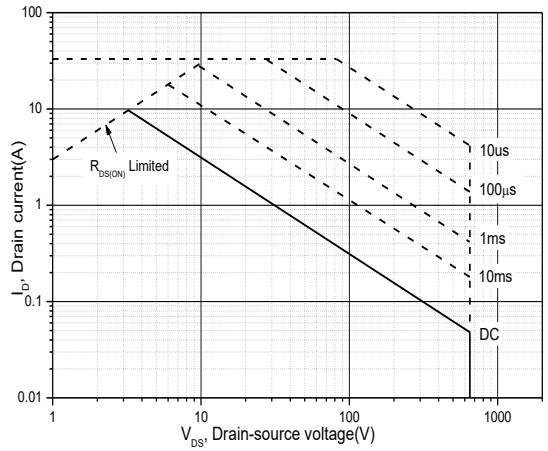

Figure 11. Safe operation area T_C=25 ℃

Test circuits and waveforms

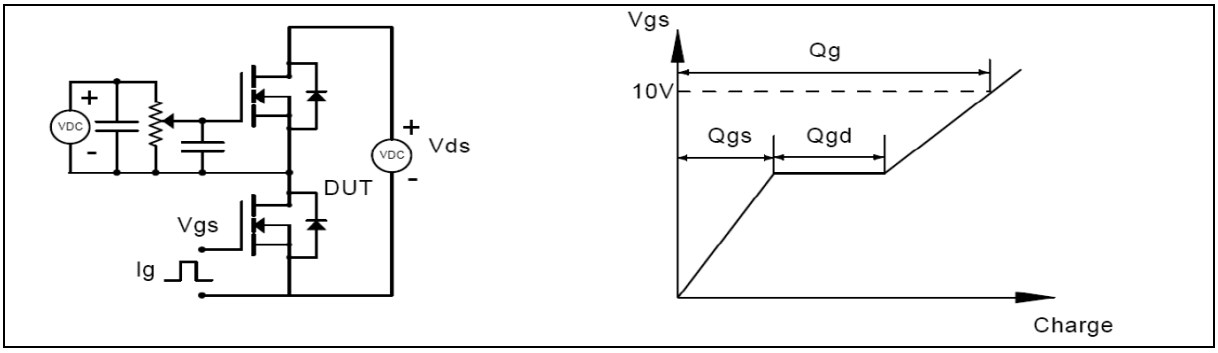

Figure 1. Gate charge test circuit & waveform

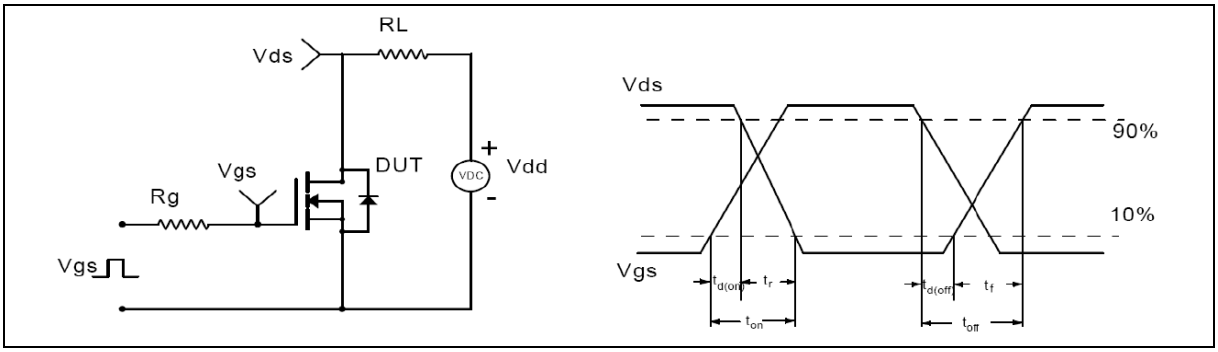

Figure 2. Switching time test circuit & waveforms

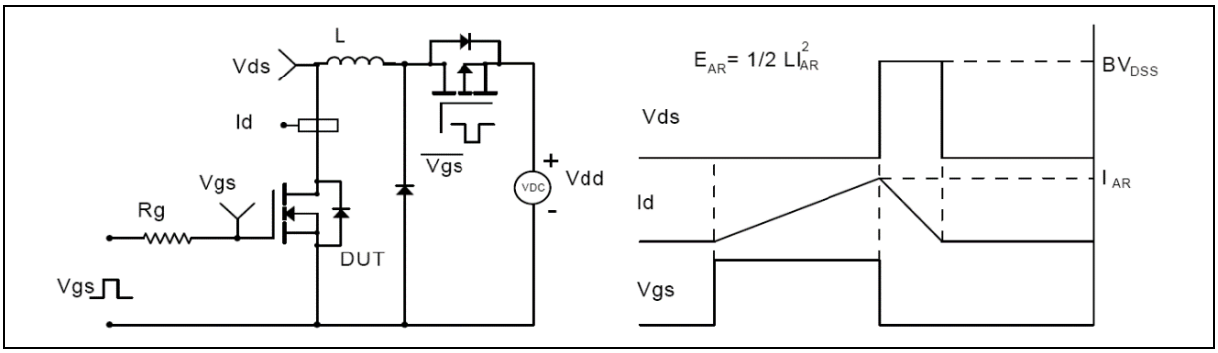

Figure 3. Unclamped inductive switching (UIS) test circuit & waveforms

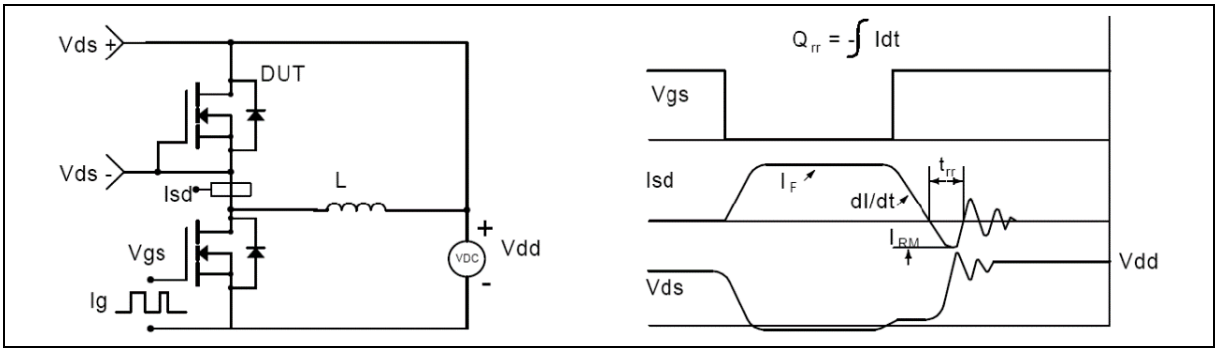

Figure 4. Diode reverse recovery test circuit & waveforms

Oriental Semiconductor © Copyright Reserved V2.0

Package Information

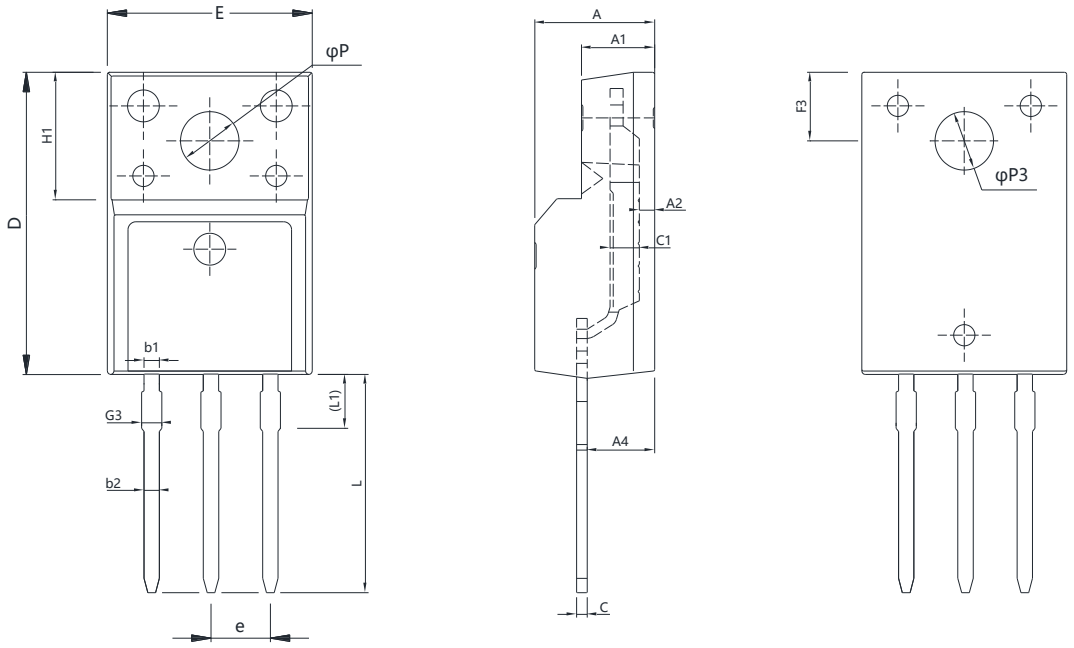

Symbol	mm		
	Min	Nom	Max
E	9.96	10.16	10.36
A	4.50	4.70	4.90
A1	2.34	2.54	2.74
A4	2.56	2.76	2.96
c	0.40	0.50	0.65
D	15.57	15.87	16.17
H1	6.70 REF		
e	2.54 BSC		
L	12.68	12.98	13.28
L1	2.88	3.03	3.18
ΦP	3.03	3.18	3.38
ΦP3	3.15	3.45	3.65
F3	3.15	3.30	3.45
G3	1.25	1.35	1.55
b1	1.18	1.28	1.43
b2	0.70	0.80	0.95

Version1: TO220F-P package outline dimension

Oriental Semiconductor © Copyright Reserved V2.0

Package Information

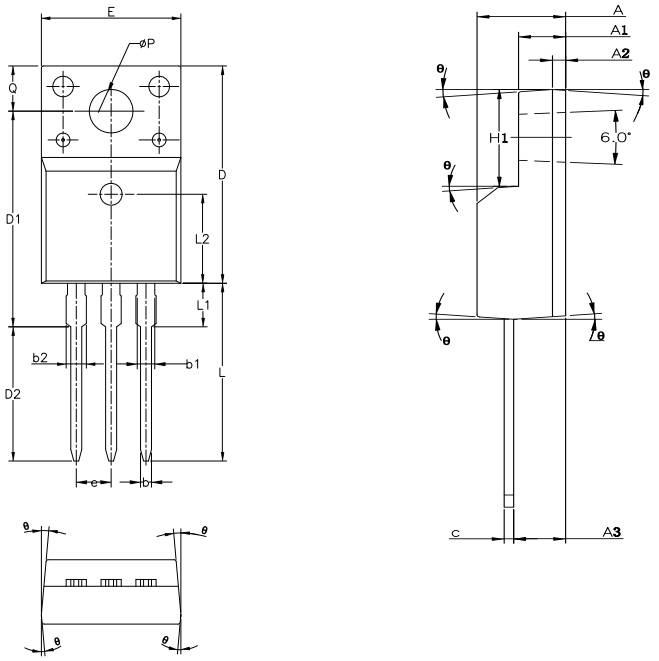

Symbol	mm		
	Min	Nom	Max
A	4.50	4.70	4.83
A1	2.34	2.54	2.74
A2		0.70 REF	
A3	2.56	2.76	2.93
b	0.70	-	0.90
b1	1.18	-	1.38
b2	-	-	1.47
c	0.45	0.50	0.60
D	15.67	15.87	16.07
D1	15.55	15.75	15.95
D2	9.60	9.80	10.00
E	9.96	10.16	10.36
e		2.54 BSC	
H1	6.48	6.68	6.88
L	12.68	12.98	13.28
L1	-	-	3.50
L2		6.50 REF	
ΦP	3.08	3.18	3.28
Q	3.20	-	3.40
θ	1º	3º	5º

Version2: TO220F-J package outline dimension

Oriental Semiconductor © Copyright Reserved V2.0

Package Information

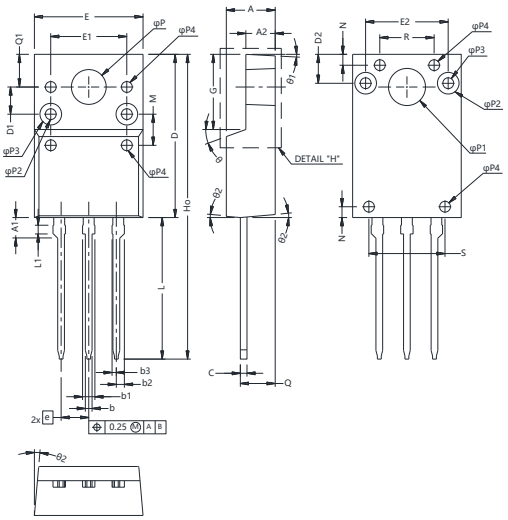

Symbol	mm	
	Min	Max
A	4.30	4.70
A1	1.80	2.10
A2	2.50	2.90
b	0.54	0.84
b1	0.99	1.29
b2	0.56	0.93
b3	0.24	0.55
c	0.49	0.79
D	14.70	15.30
D1	2.50	
D2	2.60	
e	2.29	2.79
E	9.70	10.30
E1	7.00	
E2	7.60	
G	6.70	7.10
H0	28.00	
L	12.50	13.50
L1	0.70	0.90
M	2.86	
N	1.00	
ΦP	3.05	3.40
ΦP1	3.40	
ΦP2	1.00	
ΦP3	2.00	
ΦP4	1.00	
Q	3.10	3.30
Q1	2.70	3.30
R	5.00	
S	7.00	
θ	20º	
θ1	3º	
θ2	5º	

Version 3: TO220F-S package outline dimension

Oriental Semiconductor © Copyright Reserved V2.0

Ordering Information

Package Type	Units/ Tube	Tubes/ Inner Box	Units/ Inner Box	Inner Boxes/ Carton Box	Units/ Carton Box
TO220F-P	50	20	1000	6	6000
TO220F-J	50	20	1000	5	5000
TO220F-S	50	20	1000	6	6000

Product Information

Product	Package	Pb Free	RoHS	Halogen Free
OSG65R380FF	TO220F	yes	yes	yes

Legal Disclaimer

The information given in this document shall in no event be regarded as a guarantee of conditions or characteristics. With respect to any examples or hints given herein, any typical values stated herein and/or any information regarding the application of the device, Oriental Semiconductor hereby disclaims any and all warranties and liabilities of any kind, including without limitation, warranties of non-infringement of intellectual property rights of any third party.

For further information on technology, delivery terms and conditions and prices, please contact the Oriental Semiconductor sales representatives (www.orientalsemi.com).

© Oriental Semiconductor Co.,Ltd. All Rights Reserved

ORIENTAL SEMICONDUCTOR

A Power Semiconductor Innovator