General Description

SFGMOS® MOSFET is based on Oriental Semiconductor's unique device design to achieve low $R_{DS(ON)}$, low gate charge, fast switching and excellent avalanche characteristics. The high V_{th} series is specially optimized for high systems with gate driving voltage greater than 10V.

Features

- Low $R_{DS(ON)}$ & FOM
- Extremely low switching loss
- Excellent stability and uniformity
- Fast switching and soft recovery

RoHS compliant

Applications

- Switched mode power supply
- Motor driver
- Battery protection
- DC-DC convertor
- Solar inverter
- UPS and energy inverter

Key Performance Parameters

Parameter	Value	Unit
V_{DS}	80	V
$I_{D, pulse}$	300	A
$R_{DS(ON), max}$ @ V_{GS}=10V	5.9	mΩ
Q_g	53.2	nC
PD	148	W

Marking Information

Product Name	Package	Marking
SFG100N08KF	TO263	SFG100N08K

Package & Pin information



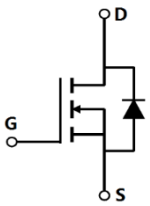

Oriental Semiconductor © Copyright Reserved V2.0

Absolute Maximum Ratings at T_j=25°C unless otherwise noted

Parameter	Symbol	Value	Unit
Drain source voltage	V_{DS}	80	V
Gate source voltage	V_{GS}	±20	V
Continuous drain current[1], T_C=25 °C	I_D	100	A
Pulsed drain current[2], T_C=25 °C	$I_{D,\ pulse}$	300	A
Continuous diode forward current[1], T_C=25 °C	I_S	100	A
Diode pulsed current[2], T_C=25 °C	$I_{S,\ pulse}$	300	A
Power dissipation[3], T_C=25 °C	P_D	148	W
Single pulsed avalanche energy[5]	E_{AS}	135	mJ
Operation and storage temperature	T_{stg}, T_j	-55 to 150	°C

Thermal Characteristics

Parameter	Symbol	Value	Unit
Thermal resistance, junction-case	$R_{\theta JC}$	0.84	°C/W
Thermal resistance, junction-ambient[4]	$R_{\theta JA}$	62	°C/W

Electrical Characteristics at T_j=25°C unless otherwise specified

Parameter	Symbol	Min.	Typ.	Max.	Unit	Test condition
Drain-source breakdown voltage	BV_{DSS}	80			V	V_{GS}=0 V, I_D=250 μA
Gate threshold voltage	$V_{GS(th)}$	2.0		4.0	V	V_{DS}=V_{GS}, I_D=250 μA
Drain-source on-state resistance	$R_{DS(ON)}$		5.75	5.90	mΩ	V_{GS}=10 V, I_D=12 A
Gate-source leakage current	I_{GSS}			100	nA	V_{GS}=20 V
				-100		V_{GS}=-20 V
Drain-source leakage current	I_{DSS}			1	μA	V_{DS}=80 V, V_{GS}=0 V
Gate resistance	R_G		3.1		Ω	f=1 MHz, Open drain

Oriental Semiconductor © Copyright Reserved V2.0

Dynamic Characteristics

Parameter	Symbol	Min.	Typ.	Max.	Unit	Test condition
Input capacitance	C_{iss}		4242		pF	V_{GS}=0 V, V_{DS}=25 V, f=100 kHz
Output capacitance	C_{oss}		1779		pF	
Reverse transfer capacitance	C_{rss}		84.1		pF	
Turn-on delay time	$t_{d(on)}$		28		ns	V_{GS}=10 V, V_{DS}=40 V, R_G=2 Ω, I_D=50 A
Rise time	t_r		6.5		ns	
Turn-off delay time	$t_{d(off)}$		48.5		ns	
Fall time	t_f		7.5		ns	

Gate Charge Characteristics

Parameter	Symbol	Min.	Typ.	Max.	Unit	Test condition
Total gate charge	Q_g		53.2		nC	V_{GS}=10 V, V_{DS}=40 V, I_D=50 A
Gate-source charge	Q_{gs}		17.5		nC	
Gate-drain charge	Q_{gd}		7.2		nC	
Gate plateau voltage	$V_{plateau}$		4.9		V	

Body Diode Characteristics

Parameter	Symbol	Min.	Typ.	Max.	Unit	Test condition
Diode forward voltage	V_{SD}			1.3	V	I_S=12 A, V_{GS}=0 V
Reverse recovery time	t_{rr}		82		ns	V_R=50 V, I_S=50 A, di/dt=100 A/μs
Reverse recovery charge	Q_{rr}		164		nC	
Peak reverse recovery current	I_{rrm}		3.2		A	

Note

1) Calculated continuous current based on maximum allowable junction temperature.
2) Repetitive rating; pulse width limited by max. junction temperature.
3) Pd is based on max. junction temperature, using junction-case thermal resistance.
4) The value of $R_{\theta JA}$ is measured with the device mounted on 1 in^2 FR-4 board with 2oz. Copper, in a still air environment with T_a=25 °C.
5) V_{DD}=50 V,V_{GS}=10 V, L=0.3 mH, starting T_j=25 °C.

Oriental Semiconductor © Copyright Reserved V2.0

Electrical Characteristics Diagrams

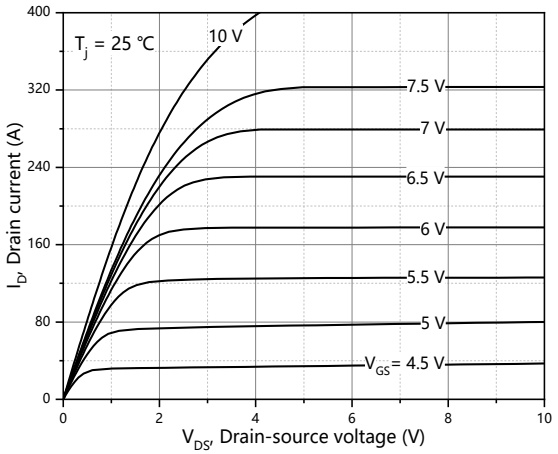

Figure 1. Typ. output characteristics

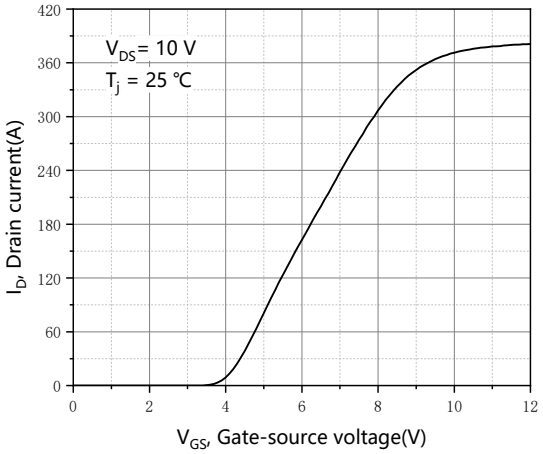

Figure 2. Typ. transfer characteristics

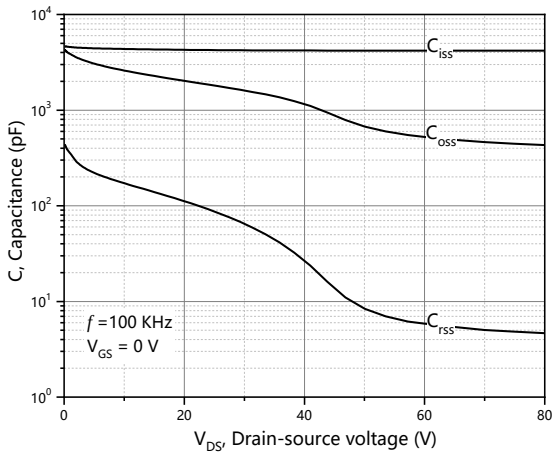

Figure 3. Typ. capacitances

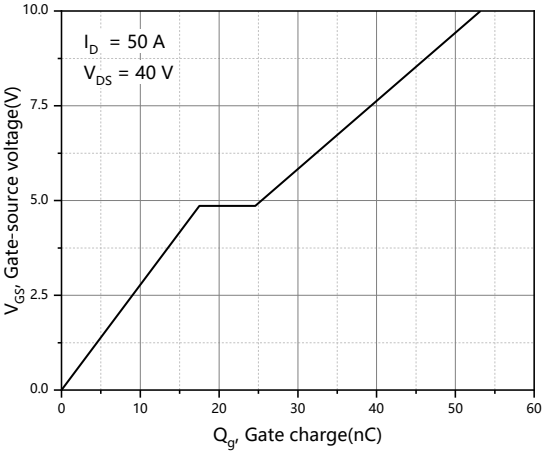

Figure 4. Typ. gate charge

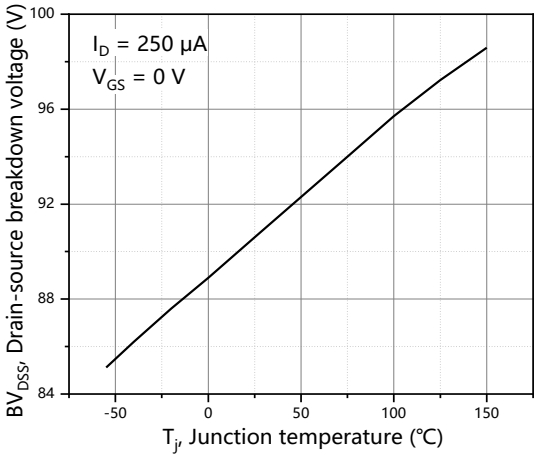

Figure 5. Drain-source breakdown voltage

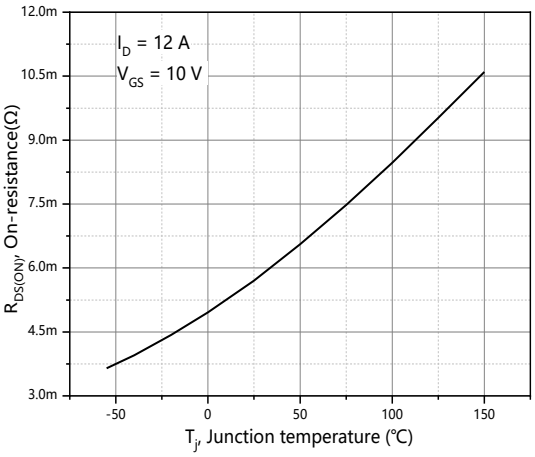

Figure 6. Drain-source on-state resistance

Oriental Semiconductor © Copyright Reserved V2.0

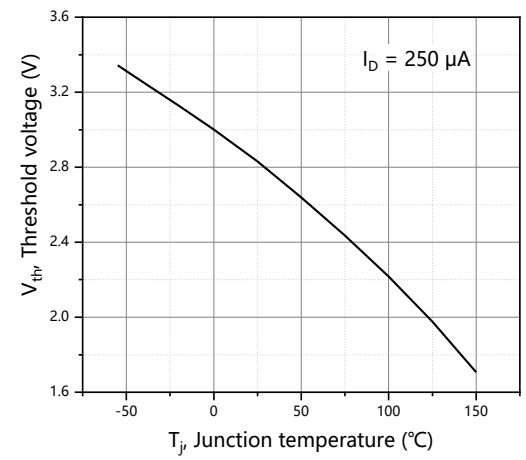

Figure 7. Threshold voltage

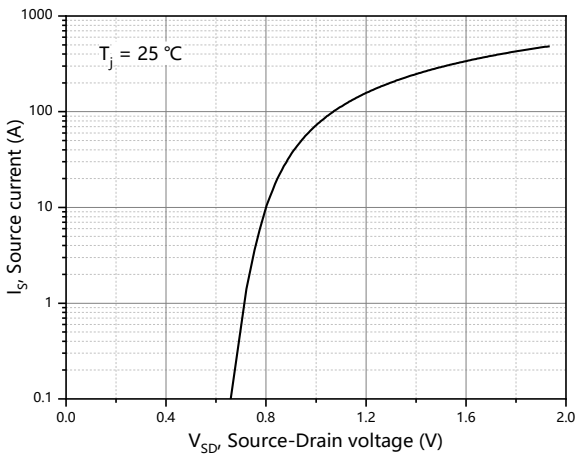

Figure 8. Forward characteristic of body diode

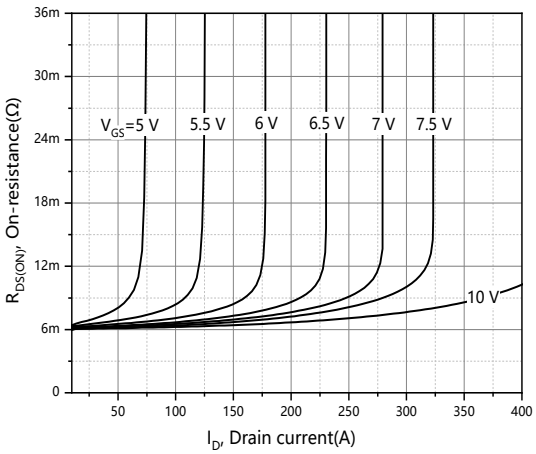

Figure 9. Drain-source on-state resistance

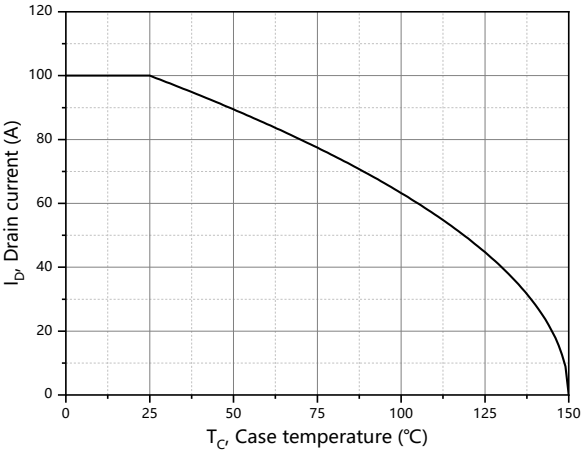

Figure 10. Drain current

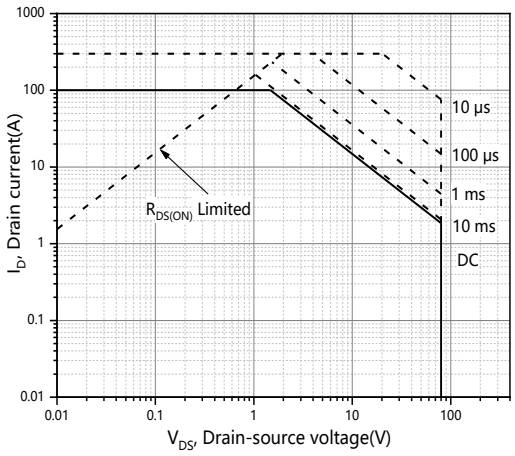

Figure 11. Safe operation area T_C=25 °C

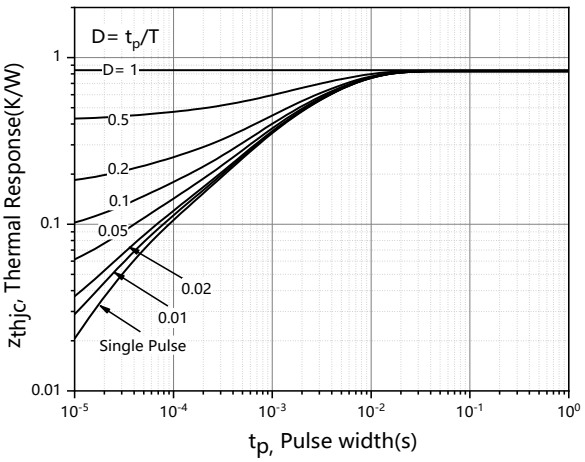

Figure 12. Max transient thermal impedance

Oriental Semiconductor © Copyright Reserved V2.0

Test circuits and waveforms

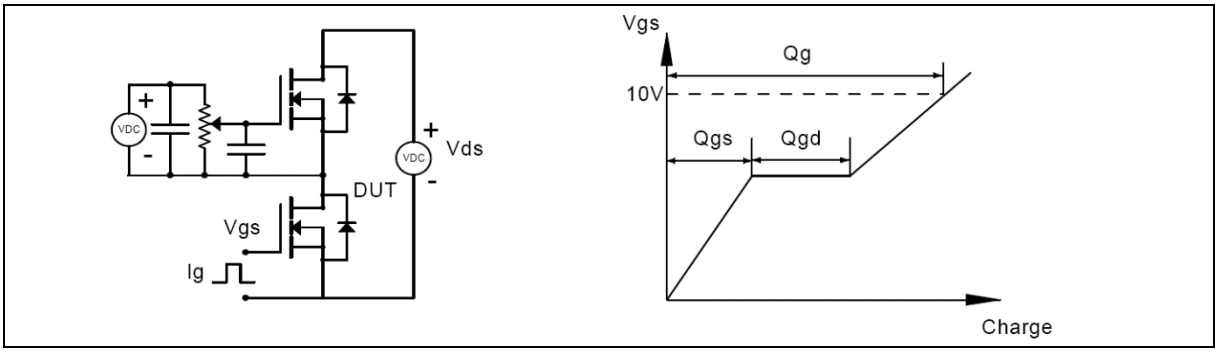

Figure 1. Gate charge test circuit & waveform

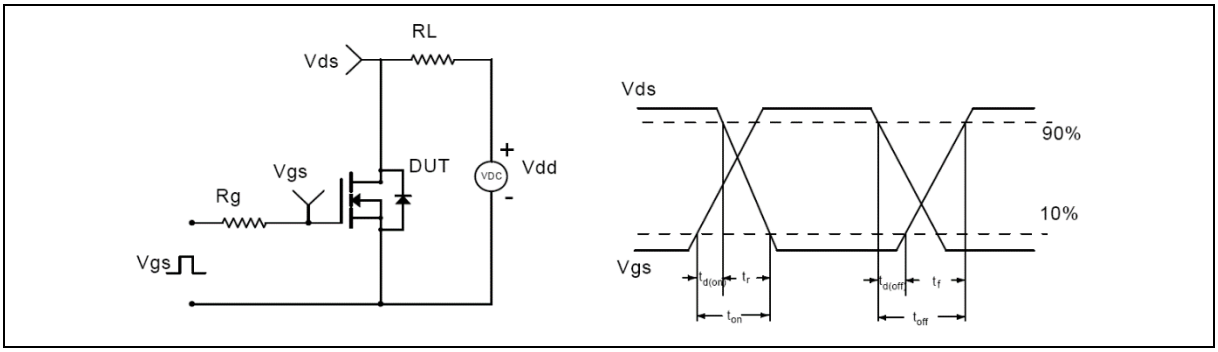

Figure 2. Switching time test circuit & waveforms

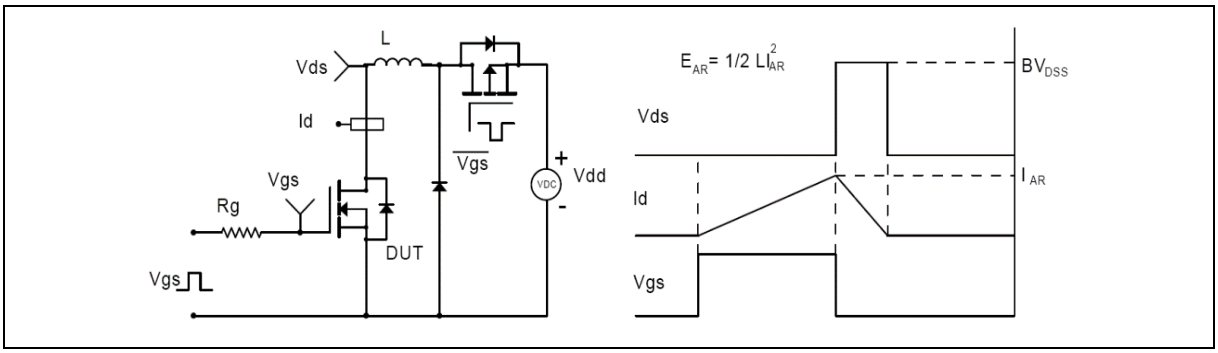

Figure 3. Unclamped inductive switching (UIS) test circuit & waveforms

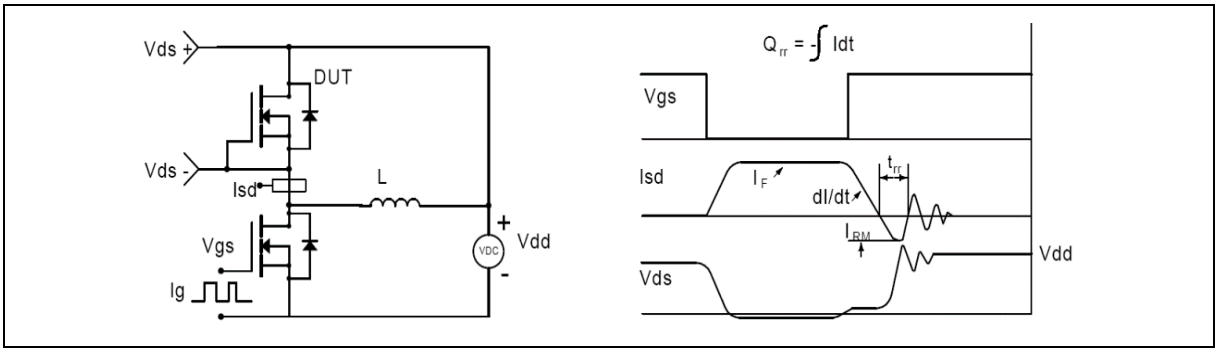

Figure 4. Diode reverse recovery test circuit & waveforms

Oriental Semiconductor © Copyright Reserved V2.0

Package Information

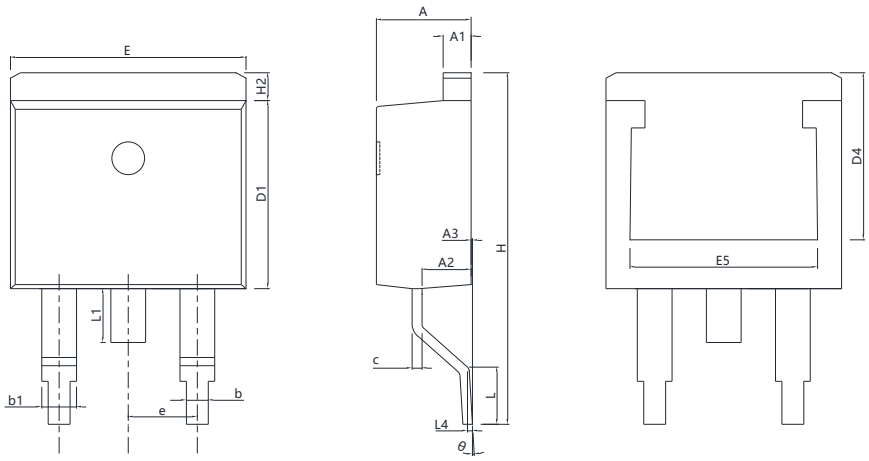

Symbol	mm		
	Min	Nom	Max
A	4.37	4.57	4.77
A1	1.22	1.27	1.42
A2	2.49	2.69	2.89
A3	0.00	0.13	0.25
b	0.70	0.81	0.96
b1	1.17	1.27	1.47
c	0.30	0.38	0.53
D1	8.50	8.70	8.90
D4	6.60	-	-
E	9.86	10.16	10.36
E5	7.06	-	-
e	2.54 BSC		
H	14.70	15.10	15.50
H2	1.07	1.27	1.47
L	2.00	2.30	2.60
L1	1.40	1.55	1.70
L4	0.25 BSC		
θ	0°	5°	9°

Veision 1：TO263-P package outline dimension

Oriental Semiconductor © Copyright Reserved V2.0

Package Information

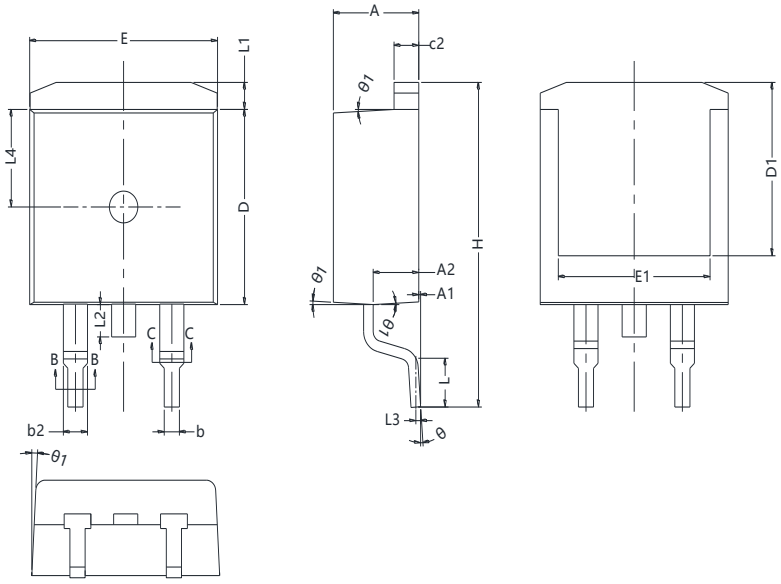

Symbol	mm		
	Min	Nom	Max
A	4.40	4.50	4.60
A1	0.00	0.10	0.25
A2	2.20	2.40	2.60
b	0.76	-	0.89
b1	0.75	0.80	0.85
b2	1.23	-	1.37
b3	1.22	1.27	1.32
c	0.47	-	0.60
c1	0.46	0.51	0.56
c2	1.25	1.30	1.35
D	9.10	9.20	9.30
D1	8.00	-	-
E	9.80	9.90	10.00
E1	7.80	-	-
e	2.54 BSC		
H	14.90	15.30	15.70
L	2.00	2.30	2.60
L1	1.17	1.27	1.40
L2	-	-	1.75
L3	0.25 BSC		
L4	4.60 REF		
θ	0°	-	8°
θ1	1°	3°	5°

Version 2: TO263-J package outline dimension

Oriental Semiconductor © Copyright Reserved V2.0

Ordering Information

Package Type	Units/ Reel	Reels / Inner Box	Units/ Inner Box	Inner Boxes/ Carton Box	Units/ Carton Box
TO263-P	800	1	800	5	4000
TO263-J	800	1	800	10	8000

Product Information

Product	Package	Pb Free	RoHS	Halogen Free
SFG100N08KF	TO263	yes	yes	yes

Legal Disclaimer

The information given in this document shall in no event be regarded as a guarantee of conditions or characteristics. With respect to any examples or hints given herein, any typical values stated herein and/or any information regarding the application of the device, Oriental Semiconductor hereby disclaims any and all warranties and liabilities of any kind, including without limitation, warranties of non-infringement of intellectual property rights of any third party.

For further information on technology, delivery terms and conditions and prices, please contact the Oriental Semiconductor sales representatives (www.orientalsemi.com).

© Oriental Semiconductor Co.,Ltd. All Rights Reserved

ORIENTAL SEMICONDUCTOR

A Power Semiconductor Innovator