General Description

SFGMOS® MOSFET is based on Oriental Semiconductor's unique device design to achieve low $R_{DS(ON)}$, low gate charge, fast switching and excellent avalanche characteristics. The high V_{th} series is specially designed to use in motor control systems with driving voltage of more than 10V.

Features

- Low $R_{DS(ON)}$ & FOM
- Extremely low switching loss
- Excellent reliability and uniformity
- Fast switching and soft recovery

RoHS compliant

Applications

- Switched mode power supply
- Motor driver
- Battery protection
- DC-DC convertor
- Inverters
- UPS

Key Performance Parameters

Parameter	Value	Unit
$V_{DS,\ min}$ @ $T_{j(max)}$	120	V
$I_{D,\ pulse}$	760	A
$R_{DS(ON),\ max}$ @ V_{GS}=10V	3.5	mΩ
Q_g	146.6	nC

Marking Information

Product Name	Package	Marking
SFG12R03HNF	TO247	SFG12R03HN

Package & Pin information



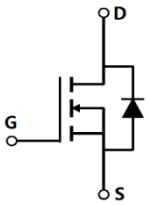

Oriental Semiconductor © Copyright Reserved V1.0

Absolute Maximum Ratings at T_j=25°C unless otherwise noted

Parameter	Symbol	Value	Unit
Drain-source voltage	V_{DS}	120	V
Gate-source voltage	V_{GS}	±20	V
Continuous drain current[1], T_C=25 °C	I_D	190	A
Pulsed drain current[2], T_C=25 °C	$I_{D,\ pulse}$	760	A
Continuous diode forward current[1], T_C=25 °C	I_S	190	A
Diode pulsed current[2], T_C=25 °C	$I_{S,\ pulse}$	760	A
Power dissipation[3], T_C=25 °C	P_D	450	W
Single pulsed avalanche energy[5]	E_{AS}	15	mJ
Operation and storage temperature	T_{stg}, T_j	-55 to 150	°C

Thermal Characteristics

Parameter	Symbol	Value	Unit
Thermal resistance, junction-case	$R_{\theta JC}$	0.28	°C/W
Thermal resistance, junction-ambient[4]	$R_{\theta JA}$	62	°C/W

Electrical Characteristics at T_j=25°C unless otherwise specified

Parameter	Symbol	Min.	Typ.	Max.	Unit	Test condition
Drain-source breakdown voltage	BV_{DSS}	120			V	V_{GS}=0 V, I_D=250 μA
Gate threshold voltage	$V_{GS(th)}$	2.0		4.0	V	V_{DS}=V_{GS}, I_D=250 μA
Drain-source on-state resistance	$R_{DS(ON)}$		3.0	3.5	mΩ	V_{GS}=10 V, I_D=50 A
Gate-source leakage current	I_{GSS}			100	nA	V_{GS}=20 V
				-100		V_{GS}=-20 V
Drain-source leakage current	I_{DSS}			1	μA	V_{DS}=120 V, V_{GS}=0 V
Gate resistance	R_G		4.9		Ω	f=1 MHz, Open drain

Oriental Semiconductor © Copyright Reserved V1.0

Dynamic Characteristics

Parameter	Symbol	Min.	Typ.	Max.	Unit	Test condition
Input capacitance	C_{iss}		10051		pF	V_{GS}=0 V, V_{DS}=25 V, f=100 kHz
Output capacitance	C_{oss}		4370		pF	
Reverse transfer capacitance	C_{rss}		415		pF	
Turn-on delay time	$t_{d(on)}$		32		ns	V_{GS}=10 V, V_{DS}=60 V, R_G=2 Ω, I_D=60 A
Rise time	t_r		152		ns	
Turn-off delay time	$t_{d(off)}$		141		ns	
Fall time	t_f		56.8		ns	

Gate Charge Characteristics

Parameter	Symbol	Min.	Typ.	Max.	Unit	Test condition
Total gate charge	Q_g		146.6		nC	V_{GS}=10 V, V_{DS}=60 V, I_D=60 A
Gate-source charge	Q_{gs}		41.3		nC	
Gate-drain charge	Q_{gd}		41.8		nC	
Gate plateau voltage	$V_{plateau}$		5.2		V	

Body Diode Characteristics

Parameter	Symbol	Min.	Typ.	Max.	Unit	Test condition
Diode forward voltage	V_{SD}			1.3	V	I_S=20 A, V_{GS}=0 V
Reverse recovery time	t_{rr}		116		ns	V_R=60 V, I_S=60 A, di/dt=100 A/μs
Reverse recovery charge	Q_{rr}		410		nC	
Peak reverse recovery current	I_{rrm}		5.8		A	

Note

1) Calculated continuous current based on maximum allowable junction temperature.
2) Repetitive rating; pulse width limited by max. junction temperature.
3) Pd is based on max. junction temperature, using junction-case thermal resistance.
4) V_{DD}=50 V,V_{GS}=10 V, L=0.3 mH, starting T_j=25 °C.

Oriental Semiconductor © Copyright Reserved V1.0

Electrical Characteristics Diagrams

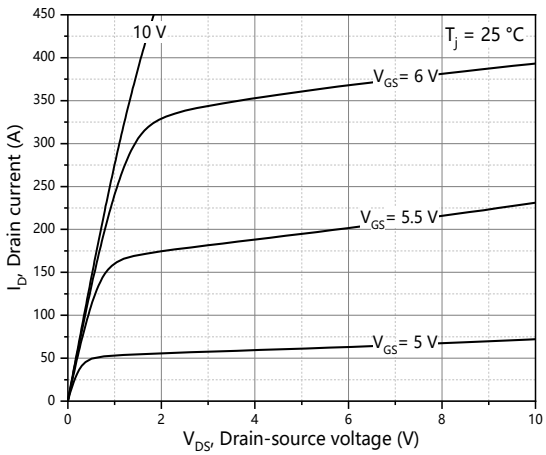

Figure 1. Typ. output characteristics

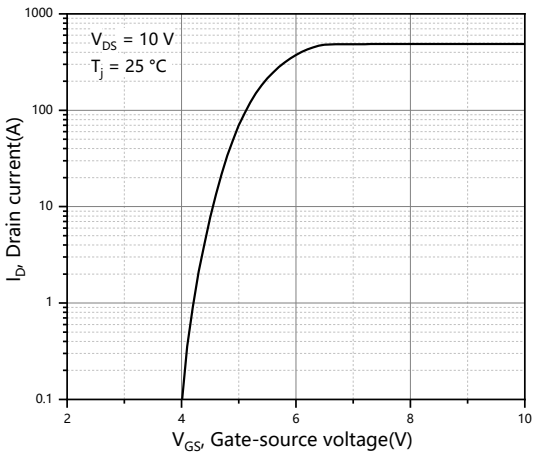

Figure 2. Typ. transfer characteristics

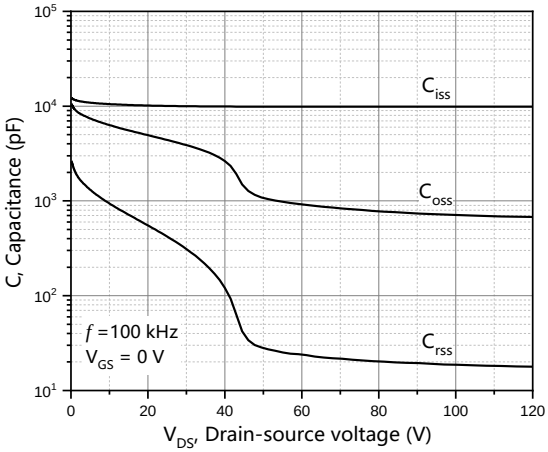

Figure 3. Typ. capacitances

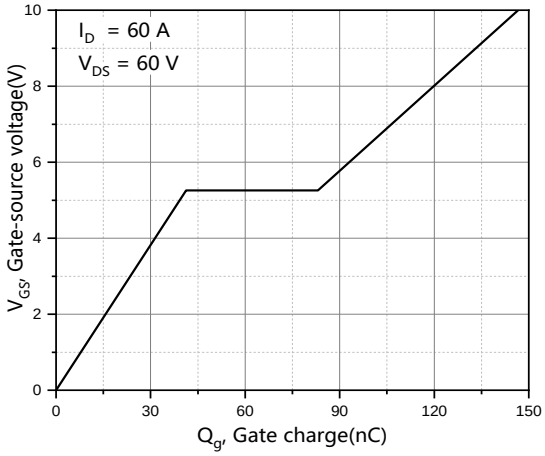

Figure 4. Typ. gate charge

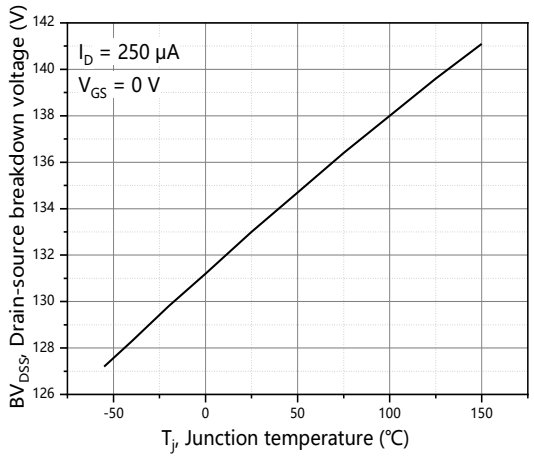

Figure 5. Drain-source breakdown voltage

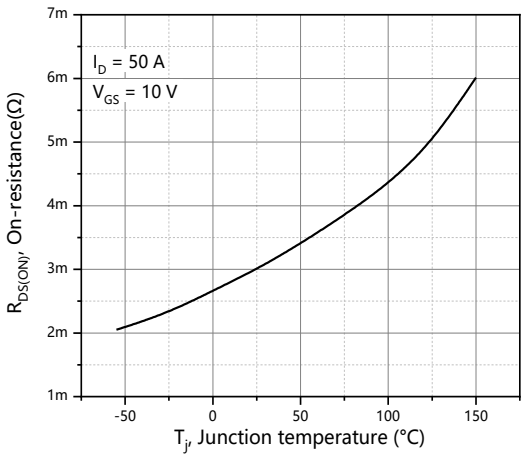

Figure 6. Drain-source on-state resistance

Oriental Semiconductor © Copyright Reserved V1.0

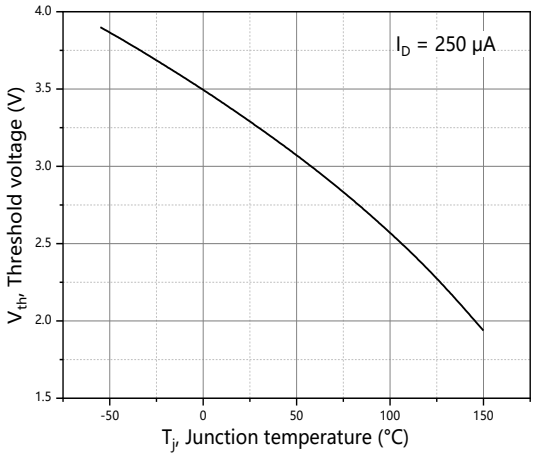

Figure 7. Threshold voltage

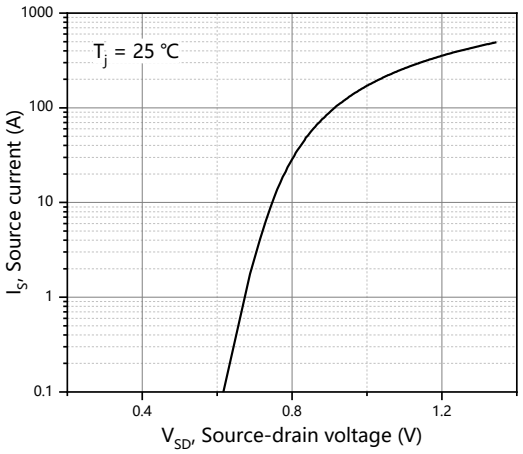

Figure 8. Forward characteristic of body diode

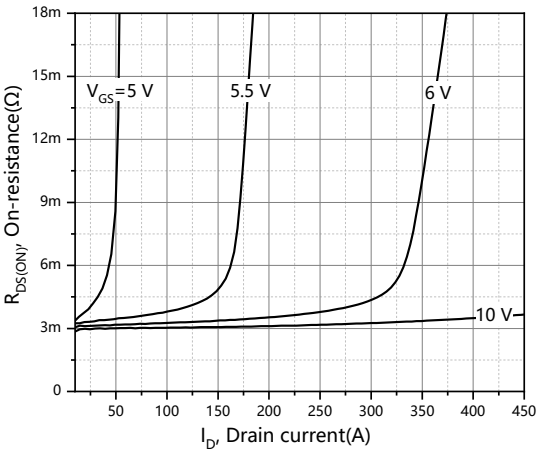

Figure 9. Drain-source on-state resistance

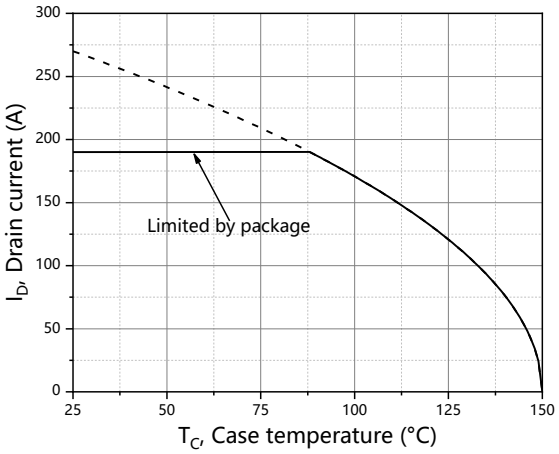

Figure 10. Drain current

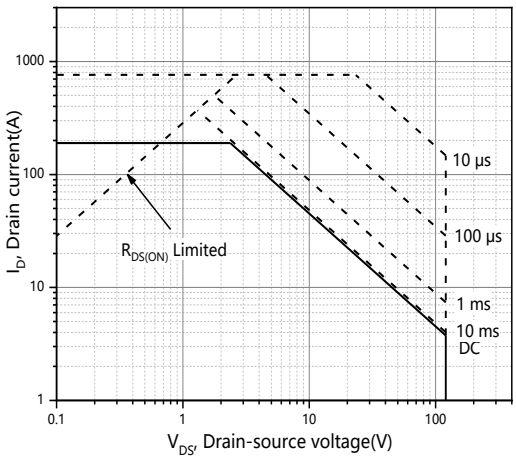

Figure 11. Safe operation area T_C=25 ℃

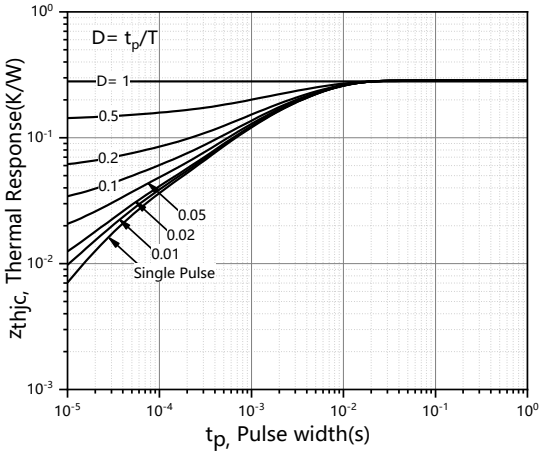

Figure 12. Max. transient thermal impedance

Oriental Semiconductor © Copyright Reserved V1.0

Test circuits and waveforms

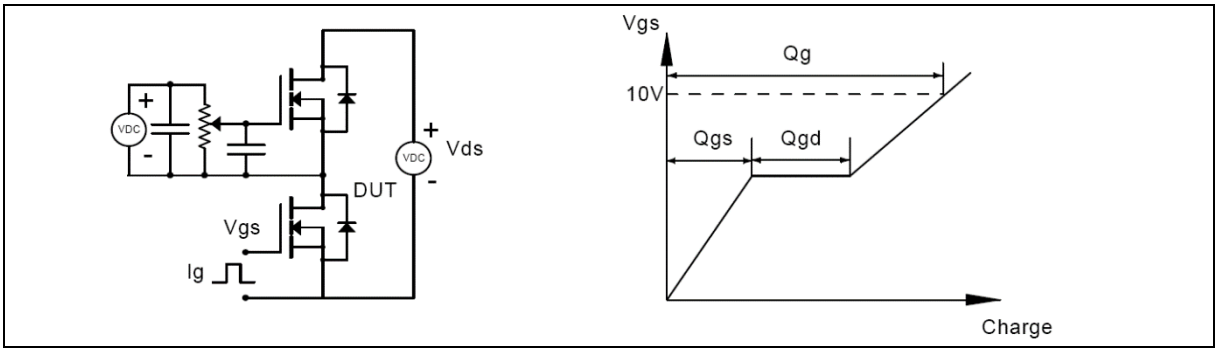

Figure 1. Gate charge test circuit & waveform

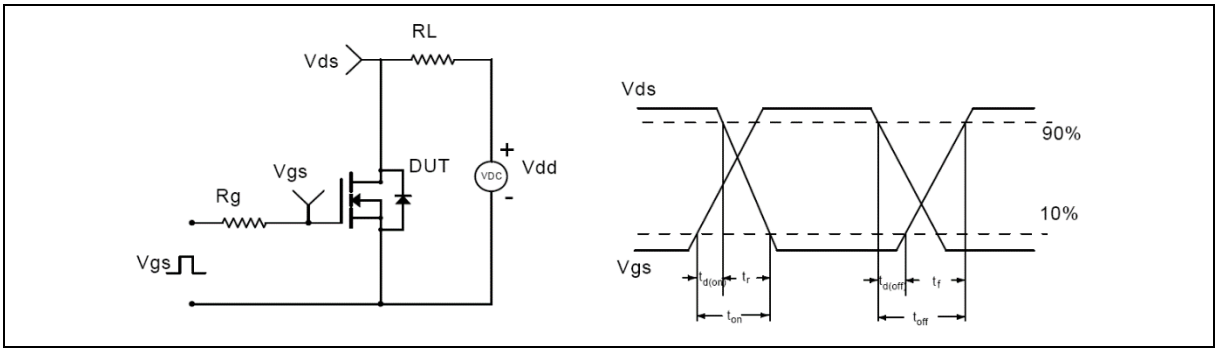

Figure 2. Switching time test circuit & waveforms

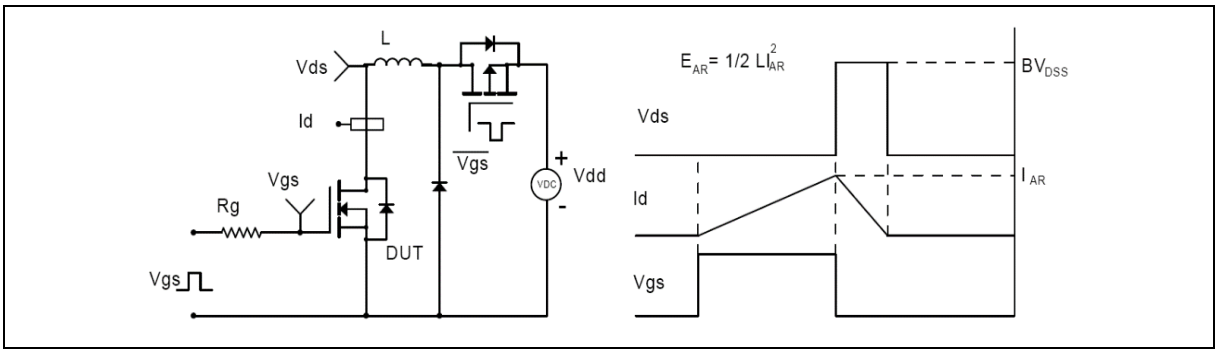

Figure 3. Unclamped inductive switching (UIS) test circuit & waveforms

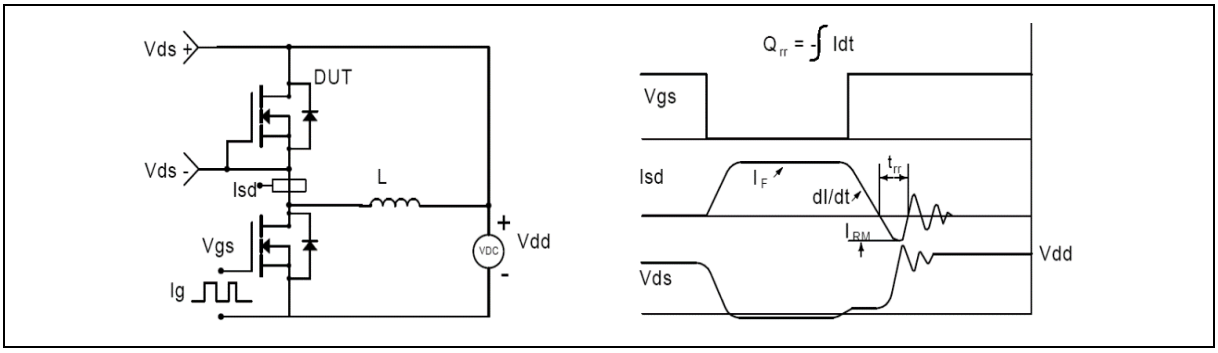

Figure 4. Diode reverse recovery test circuit & waveforms

Oriental Semiconductor © Copyright Reserved V1.0

Package Information

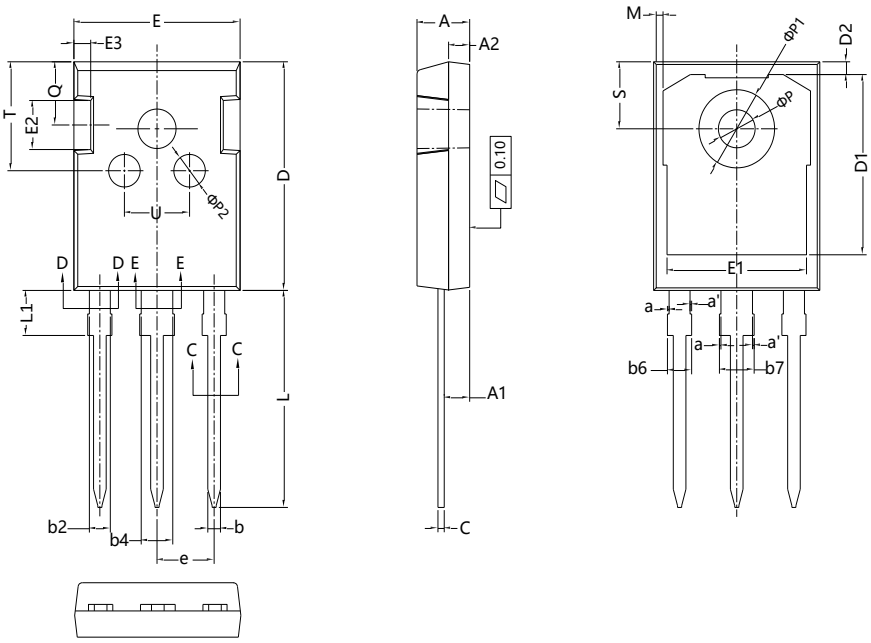

Symbol	mm		
	Min	Nom	Max
A	4.90	5.00	5.10
A1	2.31	2.41	2.51
A2	1.90	2.00	2.10
a	0.00	-	0.15
a'	0.00	-	0.15
b	1.16	-	1.26
b2	1.96	-	2.06
b4	2.96	-	3.06
b6	-	-	2.25
b7	-	-	3.25
c	0.59	-	0.66
c1	0.58	0.60	0.62
D	20.90	21.00	21.10
D1	16.25	16.55	16.85
D2	1.05	1.17	1.35
E	15.70	15.80	15.90
E1	13.10	13.30	13.50
E2	4.40	4.50	4.60
E3	1.50	1.60	1.70
e	5.436 BSC		
L	19.80	19.92	20.10
L1	-	-	4.30
M	0.35	-	0.95
P	3.40	3.50	3.60
P1	7.00	-	7.40
P2	2.40	2.5	2.6
Q	5.60	-	6.0
S	6.05	6.15	6.25
T	9.8	-	10.20
U	6.00	-	6.40

Version 1: TO247-J package outline dimension

Oriental Semiconductor © Copyright Reserved V1.0

Ordering Information

Package Type	Units/ Tube	Tubes/ Inner Box	Units/ Inner Box	Inner Boxes/ Carton Box	Units/ Carton Box
TO247-J	30	20	600	4	2400

Product Information

Product	Package	Pb Free	RoHS	Halogen Free
SFG12R03HNF	TO247	yes	yes	yes

Legal Disclaimer

The information given in this document shall in no event be regarded as a guarantee of conditions or characteristics. With respect to any examples or hints given herein, any typical values stated herein and/or any information regarding the application of the device, Oriental Semiconductor hereby disclaims any and all warranties and liabilities of any kind, including without limitation, warranties of non-infringement of intellectual property rights of any third party.

For further information on technology, delivery terms and conditions and prices, please contact the Oriental Semiconductor sales representatives (www.orientalsemi.com).

© Oriental Semiconductor Co.,Ltd. All Rights Reserved

ORIENTAL SEMICONDUCTOR

A Power Semiconductor Innovator