General Description

SFGMOS® MOSFET is based on Oriental Semiconductor's unique device design to achieve low $R_{DS(ON)}$, low gate charge, fast switching and excellent avalanche characteristics. The high V_{th} series is specially optimized for high systems with gate driving voltage greater than 10V.

Features

- Low $R_{DS(ON)}$ & FOM
- Extremely low switching loss
- Excellent stability and uniformity
- Fast switching and soft recovery

RoHS compliant

Applications

- Switched mode power supply
- Motor driver
- Battery protection
- DC-DC convertor
- Solar inverter
- UPS and energy inverter

Key Performance Parameters

Parameter	Value	Unit
V_{DS}	100	V
$I_{D, pulse}$	540	A
$R_{DS(ON), max}$ @ V_{GS}=10V	3	mΩ
Q_g	158.8	nC
PD	375	W

Marking Information

Product Name	Package	Marking
SFG180N10KF	TO263	SFG180N10K

Package & Pin information



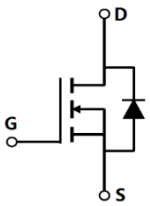

Oriental Semiconductor © Copyright Reserved V2.0

Absolute Maximum Ratings at T_j=25°C unless otherwise noted

Parameter	Symbol	Value	Unit
Drain source voltage	V_{DS}	100	V
Gate source voltage	V_{GS}	±20	V
Continuous drain current[1], T_C=25 °C	I_D	180	A
Pulsed drain current[2], T_C=25 °C	$I_{D,\ pulse}$	540	A
Continuous diode forward current[1], T_C=25 °C	I_S	180	A
Diode pulsed current[2], T_C=25 °C	$I_{S,\ pulse}$	540	A
Power dissipation[3], T_C=25 °C	P_D	375	W
Single pulsed avalanche energy[5]	E_{AS}	1000	mJ
Operation and storage temperature	T_{stg}, T_j	-55 to 150	°C

Thermal Characteristics

Parameter	Symbol	Value	Unit
Thermal resistance, junction-case	$R_{\theta JC}$	0.33	°C/W
Thermal resistance, junction-ambient[4]	$R_{\theta JA}$	62	°C/W

Electrical Characteristics at T_j=25°C unless otherwise specified

Parameter	Symbol	Min.	Typ.	Max.	Unit	Test condition
Drain-source breakdown voltage	BV_{DSS}	100			V	V_{GS}=0 V, I_D=250 μA
Gate threshold voltage	$V_{GS(th)}$	2.0		4.0	V	V_{DS}=V_{GS}, I_D=250 μA
Drain-source on-state resistance	$R_{DS(ON)}$		2.5	3.0	mΩ	V_{GS}=10 V, I_D=20 A
Gate-source leakage current	I_{GSS}			100	nA	V_{GS}=20 V
				-100		V_{GS}=-20 V
Drain-source leakage current	I_{DSS}			1	μA	V_{DS}=100 V, V_{GS}=0 V
Gate resistance	R_G		3.5		Ω	f=1 MHz, Open drain

Oriental Semiconductor © Copyright Reserved V2.0

Dynamic Characteristics

Parameter	Symbol	Min.	Typ.	Max.	Unit	Test condition
Input capacitance	C_{iss}		10953		pF	V_{GS}=0 V, V_{DS}=50 V, f=100 kHz
Output capacitance	C_{oss}		1402		pF	
Reverse transfer capacitance	C_{rss}		33.3		pF	
Turn-on delay time	$t_{d(on)}$		40.7		ns	V_{GS}=10 V, V_{DS}=50 V, R_G=2.2 Ω, I_D=25 A
Rise time	t_r		31.4		ns	
Turn-off delay time	$t_{d(off)}$		75.4		ns	
Fall time	t_f		16.2		ns	

Gate Charge Characteristics

Parameter	Symbol	Min.	Typ.	Max.	Unit	Test condition
Total gate charge	Q_g		158.8		nC	V_{GS}=10 V, V_{DS}=50 V, I_D=25 A
Gate-source charge	Q_{gs}		38.4		nC	
Gate-drain charge	Q_{gd}		41.6		nC	
Gate plateau voltage	$V_{plateau}$		4.6		V	

Body Diode Characteristics

Parameter	Symbol	Min.	Typ.	Max.	Unit	Test condition
Diode forward voltage	V_{SD}			1.3	V	I_S=20 A, V_{GS}=0 V
Reverse recovery time	t_{rr}		99.2		ns	V_R=50 V, I_S=25 A, di/dt=100 A/μs
Reverse recovery charge	Q_{rr}		402		nC	
Peak reverse recovery current	I_{rrm}		6.7		A	

Note

1) Calculated continuous current based on maximum allowable junction temperature.
2) Repetitive rating; pulse width limited by max. junction temperature.
3) Pd is based on max. junction temperature, using junction-case thermal resistance.
4) The value of $R_{\theta JA}$ is measured with the device mounted on 1 in^2 FR-4 board with 2oz. Copper, in a still air environment with T_a=25 °C.
5) V_{DD}=50 V,V_{GS}=10 V, L=0.3 mH, starting T_j=25 °C.

Oriental Semiconductor © Copyright Reserved V2.0

Electrical Characteristics Diagrams

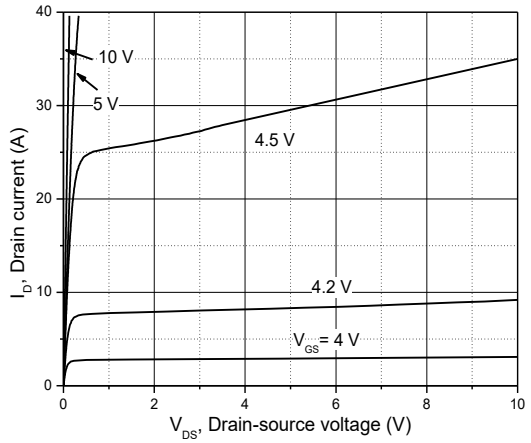

Figure 1. Typ. output characteristics

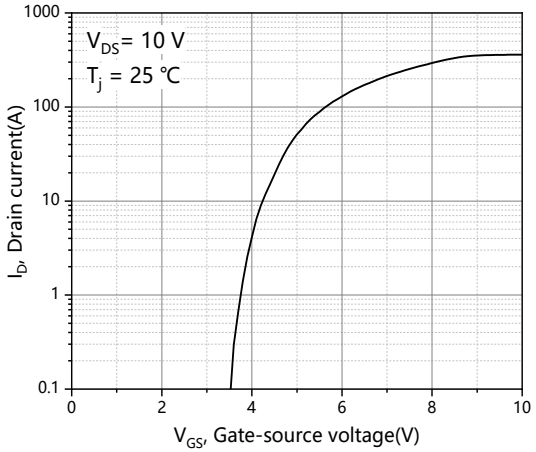

Figure 2. Typ. transfer characteristics

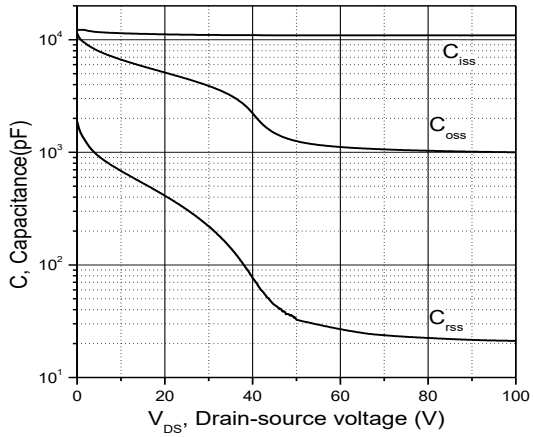

Figure 3. Typ. capacitances

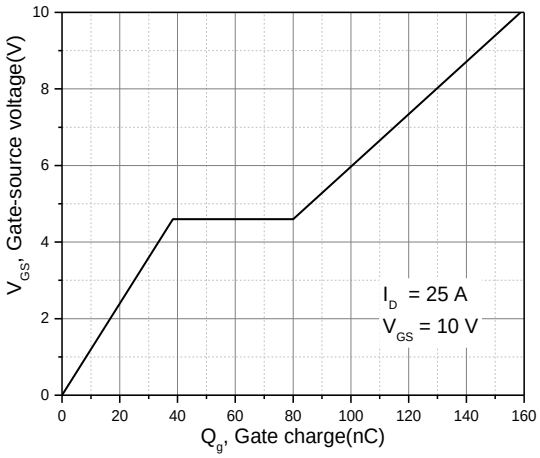

Figure 4. Typ. gate charge

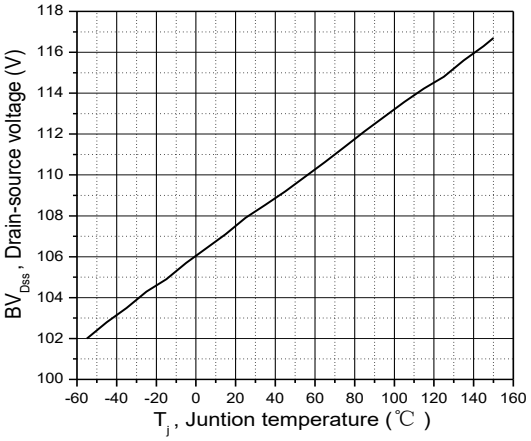

Figure 5. Drain-source breakdown voltage

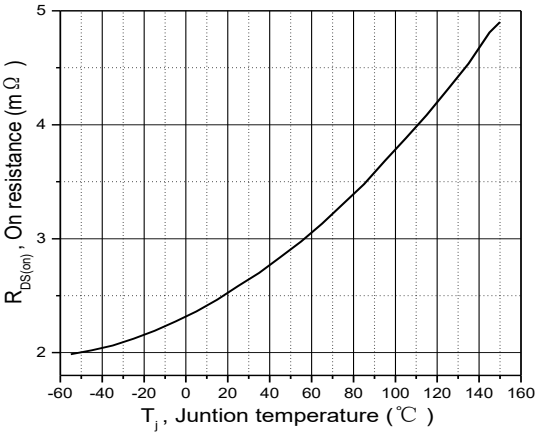

Figure 6. Drain-source on-state resistance

Oriental Semiconductor © Copyright Reserved V2.0

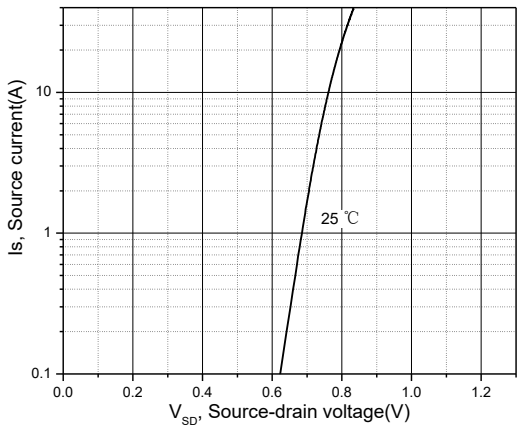

Figure 7. Forward characteristic of body diode

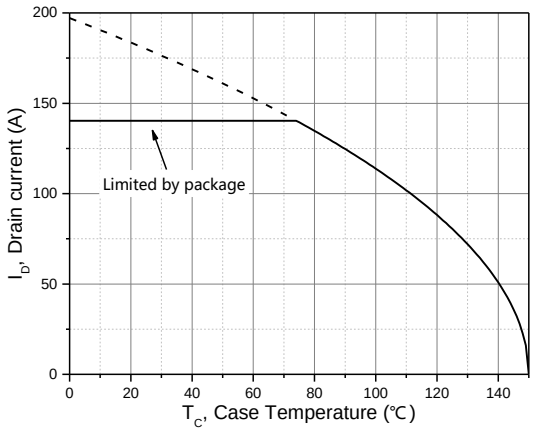

Figure 8. Drain current

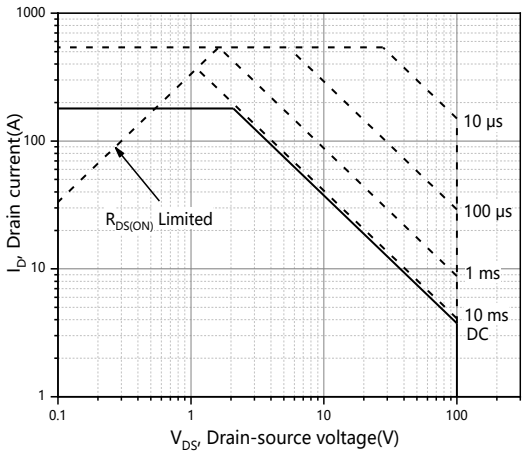

Figure 9. Safe operation area T_C=25 °C

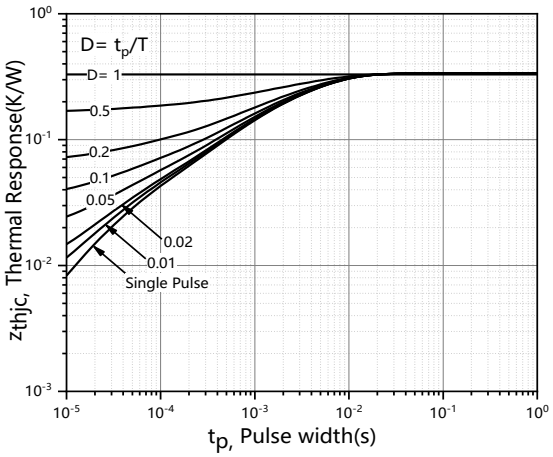

Figure 10.Max. transient thermal impedance

Test circuits and waveforms

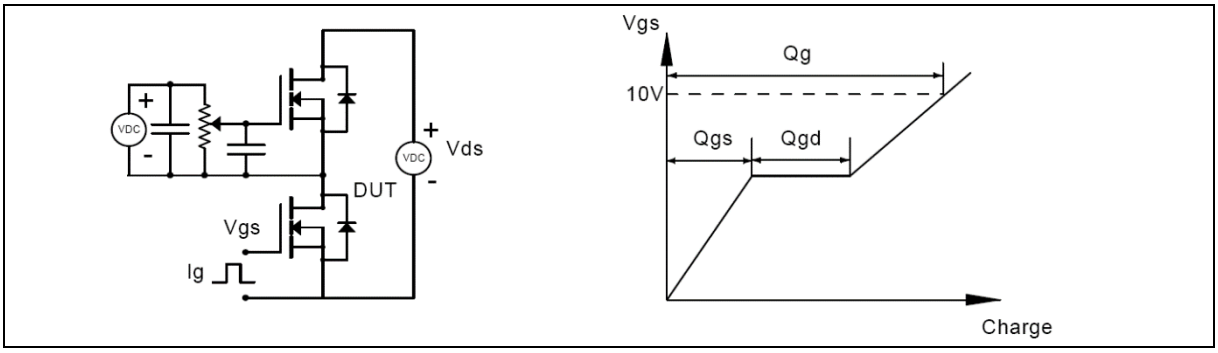

Figure 1. Gate charge test circuit & waveform

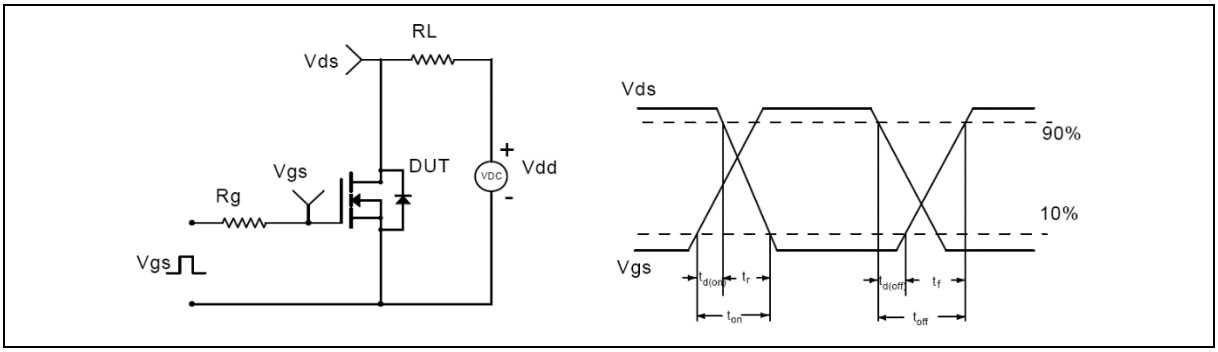

Figure 2. Switching time test circuit & waveforms

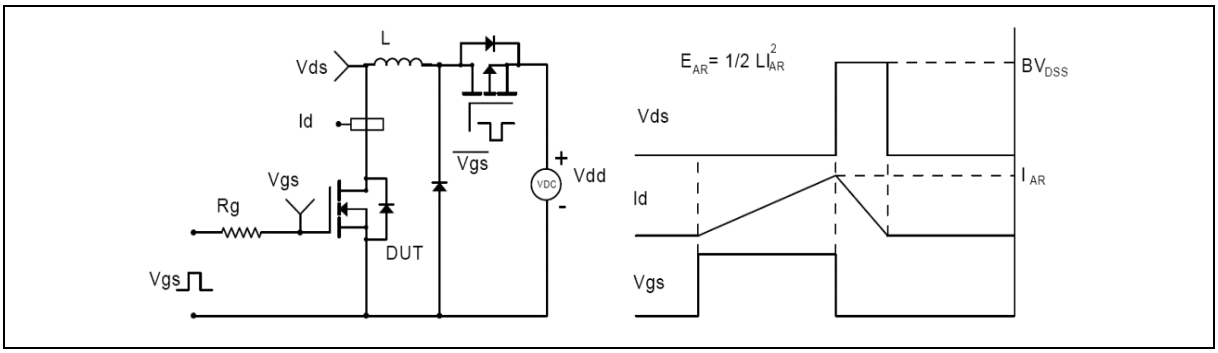

Figure 3. Unclamped inductive switching (UIS) test circuit & waveforms

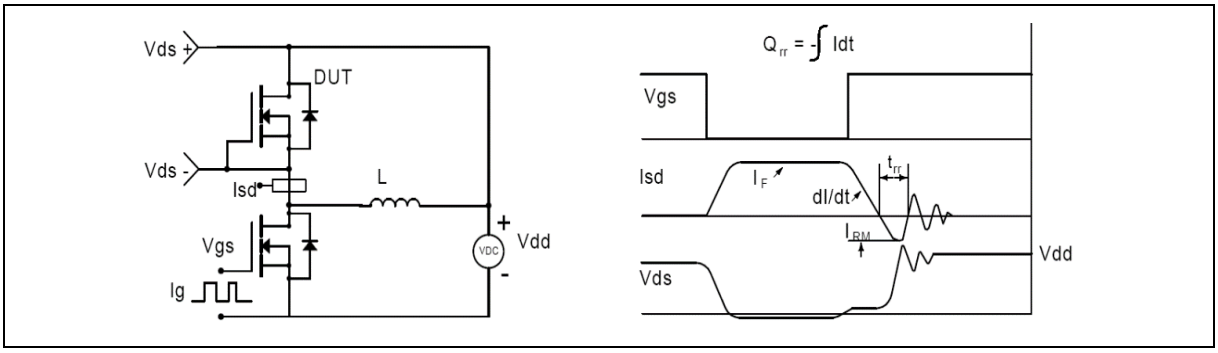

Figure 4. Diode reverse recovery test circuit & waveforms

Oriental Semiconductor © Copyright Reserved V2.0

Package Information

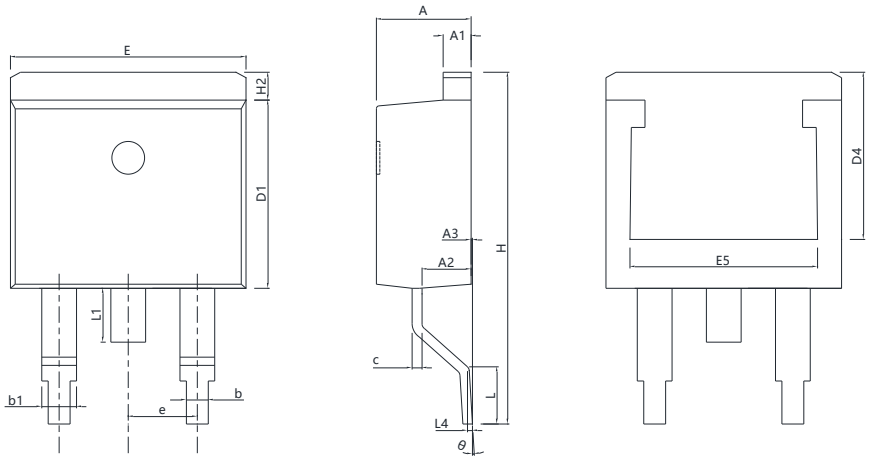

Symbol	mm		
	Min	Nom	Max
A	4.37	4.57	4.77
A1	1.22	1.27	1.42
A2	2.49	2.69	2.89
A3	0.00	0.13	0.25
b	0.70	0.81	0.96
b1	1.17	1.27	1.47
c	0.30	0.38	0.53
D1	8.50	8.70	8.90
D4	6.60	-	-
E	9.86	10.16	10.36
E5	7.06	-	-
e	2.54 BSC		
H	14.70	15.10	15.50
H2	1.07	1.27	1.47
L	2.00	2.30	2.60
L1	1.40	1.55	1.70
L4	0.25 BSC		
θ	0°	5°	9°

Veision 1：TO263-P package outline dimension

Oriental Semiconductor © Copyright Reserved V2.0

Ordering Information

Package Type	Units/ Reel	Reels / Inner Box	Units/ Inner Box	Inner Boxes/ Carton Box	Units/ Carton Box
TO263-P	800	1	800	5	4000

Product Information

Product	Package	Pb Free	RoHS	Halogen Free
SFG180N10KF	TO263	yes	yes	yes

Legal Disclaimer

The information given in this document shall in no event be regarded as a guarantee of conditions or characteristics. With respect to any examples or hints given herein, any typical values stated herein and/or any information regarding the application of the device, Oriental Semiconductor hereby disclaims any and all warranties and liabilities of any kind, including without limitation, warranties of non-infringement of intellectual property rights of any third party.

For further information on technology, delivery terms and conditions and prices, please contact the Oriental Semiconductor sales representatives (www.orientalsemi.com).

© Oriental Semiconductor Co.,Ltd. All Rights Reserved

ORIENTAL SEMICONDUCTOR

A Power Semiconductor Innovator