## General Description

FSMOS® MOSFET is based on Oriental Semiconductor's unique device design to achieve low $R_{DS(ON)}$, low gate charge, fast switching and excellent avalanche characteristics. The low $V_{th}$ series is specially designed to use in synchronous rectification power systems with low driving voltage.

## Features

- Low $R_{DS(ON)}$ & FOM
- Extremely low switching loss
- Excellent reliability and uniformity
- Fast switching and soft recovery

RoHS compliant

## Applications

- PD charger
- Motor driver
- Switching voltage regulator
- DC-DC convertor
- Switched mode power supply

## Key Performance Parameters

| Parameter | Value | Unit |
|---|---|---|
| $V_{DS,\ min}$ @ $T_{j(max)}$ | 40 | V |
| $I_{D,\ pulse}$ | 800 | A |
| $R_{DS(ON)\ max}$ @ $V_{GS}$=10V | 1.5 | mΩ |
| $Q_g$ | 96.8 | nC |

## Marking Information

| Product Name | Package | Marking |
|---|---|---|
| SFS04R02GF | PDFN5*6 | SFS04R02G |

## Package & Pin information




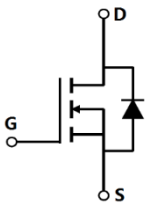


Oriental Semiconductor © Copyright Reserved V2.1

## Absolute Maximum Ratings at $T_j$=25°C unless otherwise noted

| Parameter | Symbol | Value | Unit |
|---|---|---|---|
| Drain source voltage | $V_{DS}$ | 40 | V |
| Gate source voltage | $V_{GS}$ | ±20 | V |
| Continuous drain current[1], $T_C$=25 °C | $I_D$ | 200 | A |
| Pulsed drain current[2], $T_C$=25 °C | $I_{D, pulse}$ | 800 | A |
| Continuous diode forward current[1], $T_C$=25 °C | $I_S$ | 200 | A |
| Diode pulsed current[2], $T_C$=25 °C | $I_{S, Pulse}$ | 800 | A |
| Power dissipation[3], $T_C$=25 °C | $P_D$ | 158 | W |
| Single pulsed avalanche energy[5] | $E_{AS}$ | 200 | mJ |
| Operation and storage temperature | $T_{stg}$, $T_j$ | -55 to 175 | °C |

## Thermal Characteristics

| Parameter | Symbol | Value | Unit |
|---|---|---|---|
| Thermal resistance, junction-case | $R_{\theta JC}$ | 0.95 | °C/W |
| Thermal resistance, junction-ambient[4] | $R_{\theta JA}$ | 62 | °C/W |

## Electrical Characteristics at $T_j$=25°C unless otherwise specified

| Parameter | Symbol | Min. | Typ. | Max. | Unit | Test condition |
|---|---|---|---|---|---|---|
| Drain-source breakdown voltage | $BV_{DSS}$ | 40 | | | V | $V_{GS}$=0 V, $I_D$=250 μA |
| Gate threshold voltage | $V_{GS(th)}$ | 1.0 | | 2.5 | V | $V_{DS}$=$V_{GS}$, $I_D$=250 μA |
| Drain-source on-state resistance | $R_{DS(ON)}$ | | 1.25 | 1.50 | mΩ | $V_{GS}$=10 V, $I_D$=55 A |
| Drain-source on-state resistance | $R_{DS(ON)}$ | | 2.0 | 3.0 | mΩ | $V_{GS}$=6 V, $I_D$=55 A |
| Gate-source leakage current | $I_{GSS}$ | | | 100 | nA | $V_{GS}$=20 V |
| | | | | -100 | | $V_{GS}$=-20 V |
| Drain-source leakage current | $I_{DSS}$ | | | 1 | μA | $V_{DS}$=40 V, $V_{GS}$=0 V |

Oriental Semiconductor © Copyright Reserved V2.1

## Dynamic Characteristics

| Parameter | Symbol | Min. | Typ. | Max. | Unit | Test condition |
|---|---|---|---|---|---|---|
| Input capacitance | $C_{iss}$ | | 6587 | | pF | $V_{GS}$=0 V, $V_{DS}$=20 V, $f$=100 kHz |
| Output capacitance | $C_{oss}$ | | 2537 | | pF | |
| Reverse transfer capacitance | $C_{rss}$ | | 178 | | pF | |
| Turn-on delay time | $t_{d(on)}$ | | 26.6 | | ns | $V_{GS}$=10 V, $V_{DS}$=20 V, $R_G$=2 Ω, $I_D$=20 A |
| Rise time | $t_r$ | | 9.3 | | ns | |
| Turn-off delay time | $t_{d(off)}$ | | 96 | | ns | |
| Fall time | $t_f$ | | 39.3 | | ns | |

## Gate Charge Characteristics

| Parameter | Symbol | Min. | Typ. | Max. | Unit | Test condition |
|---|---|---|---|---|---|---|
| Total gate charge | $Q_g$ | | 96.8 | | nC | $V_{GS}$=10 V, $V_{DS}$=20 V, $I_D$=20 A |
| Gate-source charge | $Q_{gs}$ | | 14.5 | | nC | |
| Gate-drain charge | $Q_{gd}$ | | 18.4 | | nC | |
| Gate plateau voltage | $V_{plateau}$ | | 2.7 | | V | |

## Body Diode Characteristics

| Parameter | Symbol | Min. | Typ. | Max. | Unit | Test condition |
|---|---|---|---|---|---|---|
| Diode forward voltage | $V_{SD}$ | | | 1.3 | V | $I_S$=20 A, $V_{GS}$=0 V |
| Reverse recovery time | $t_{rr}$ | | 66.2 | | ns | $V_R$=20 V, $I_S$=20 A, di/dt=100 A/μs |
| Reverse recovery charge | $Q_{rr}$ | | 66.1 | | nC | |
| Peak reverse recovery current | $I_{rrm}$ | | 2 | | A | |

**Note**

1) Calculated continuous current based on maximum allowable junction temperature.
2) Repetitive rating; pulse width limited by max. junction temperature.
3) Pd is based on max. junction temperature, using junction-case thermal resistance.
4) The value of $R_{\theta JA}$ is measured with the device mounted on 1 in 2 FR-4 board with 2oz. Copper, in a still air environment with $T_a$=25 °C.
5) $V_{DD}$=30 V,$V_{GS}$=10 V, L=0.3 mH, starting $T_j$=25 °C.

Oriental Semiconductor © Copyright Reserved V2.1

## Electrical Characteristics Diagrams

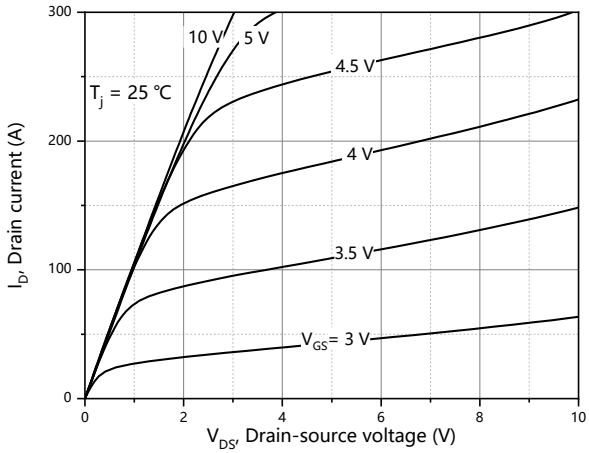


**Figure 1. Typ. output characteristics**

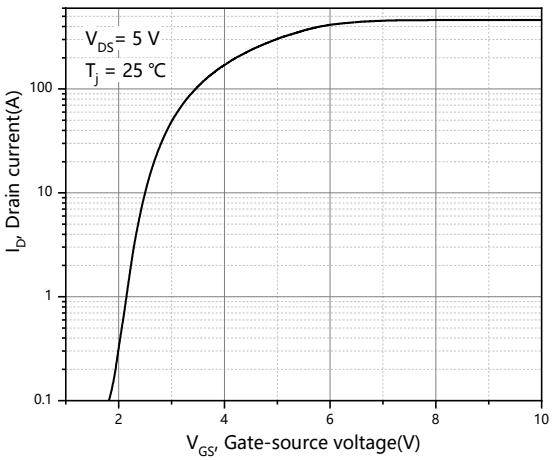


**Figure 2. Typ. transfer characteristics**

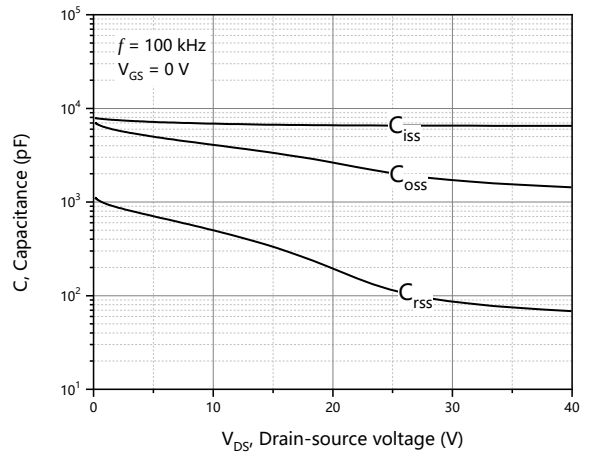


**Figure 3. Typ. capacitances**

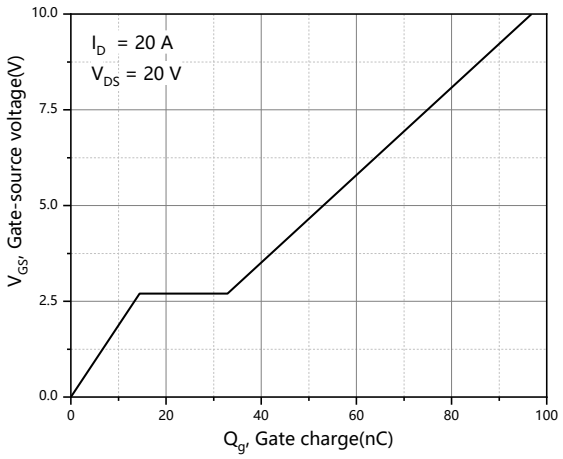


**Figure 4. Typ. gate charge**

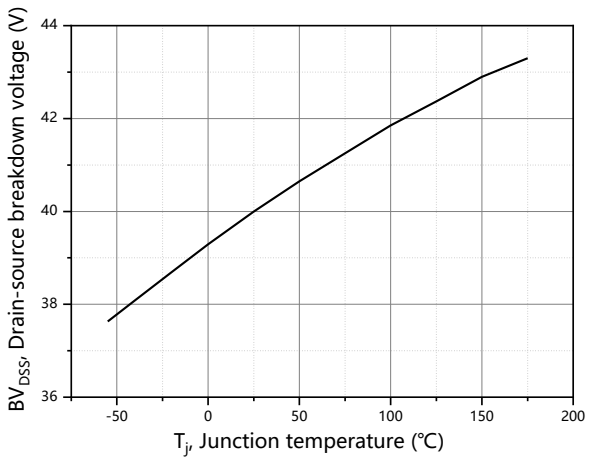


**Figure 5. Drain-source breakdown voltage**

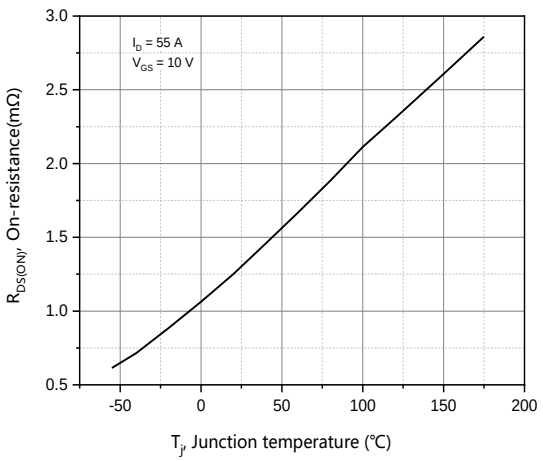


**Figure 6. Drain-source on-state resistance**

Oriental Semiconductor © Copyright Reserved V2.1

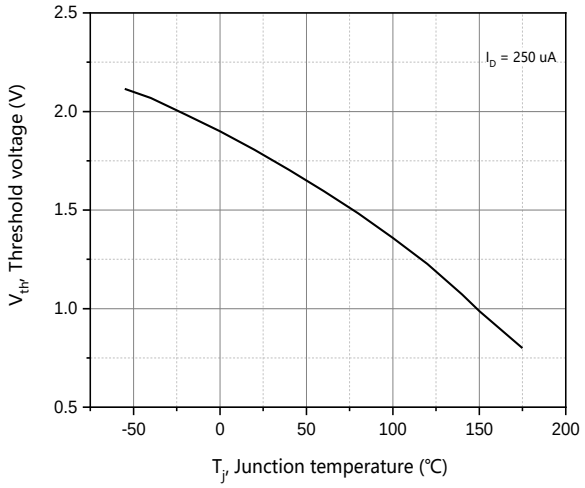


**Figure 7. Threshold voltage**

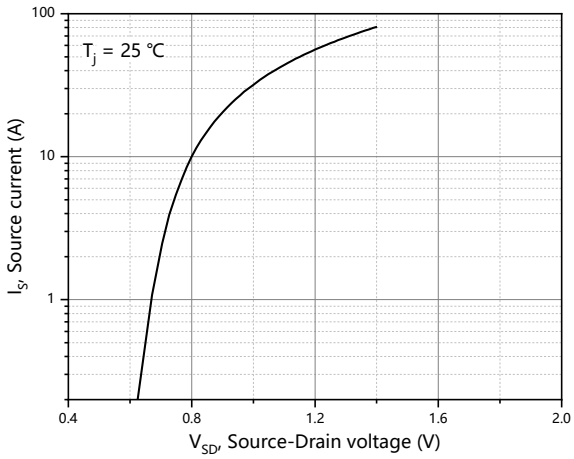


**Figure 8. Forward characteristic of body diode**

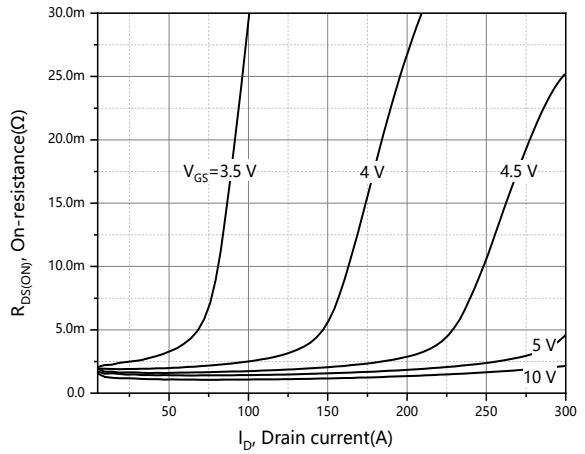


**Figure 9. Drain-source on-state resistance**

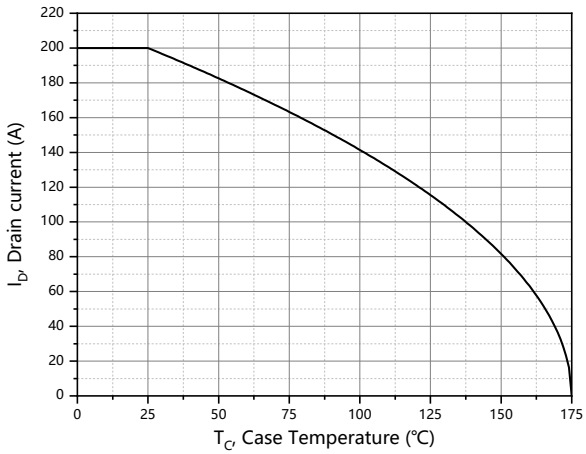


**Figure 10. Drain current**

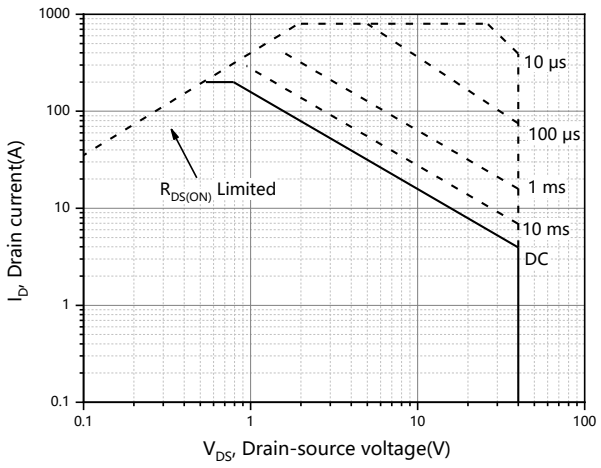


**Figure 11. Safe operation area $T_C$=25 °C**

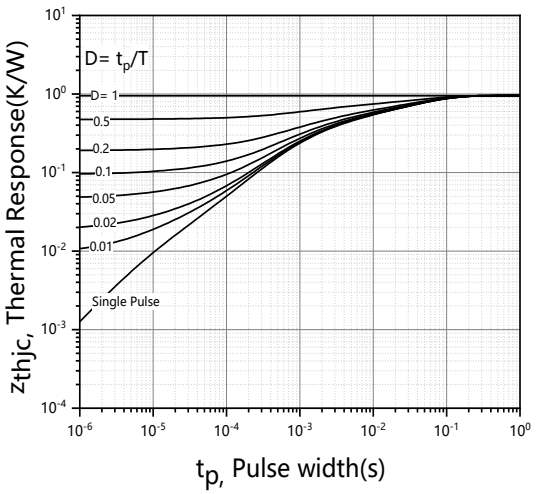


**Figure 12. Max transient thermal impedance**

## Test circuits and waveforms

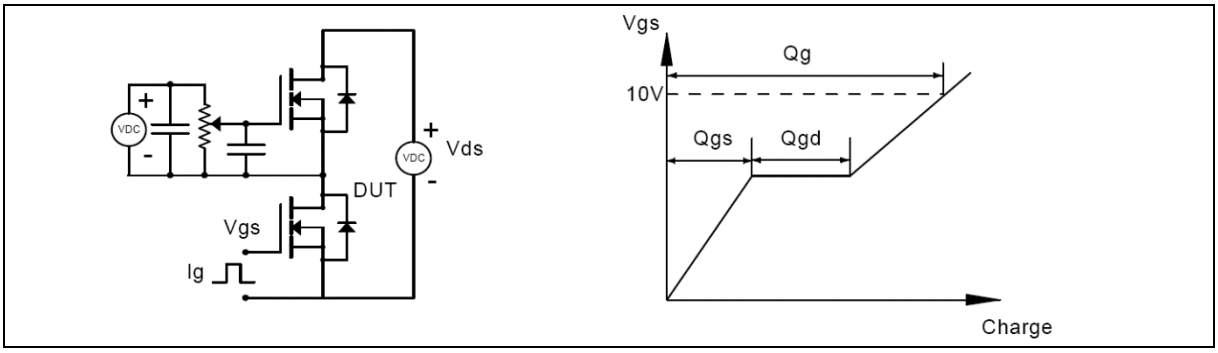


**Figure 1. Gate charge test circuit & waveform**

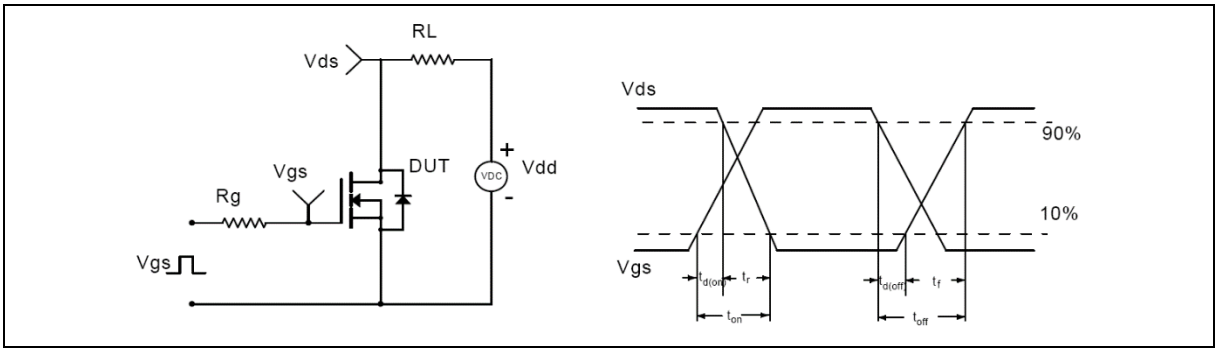


**Figure 2. Switching time test circuit & waveforms**

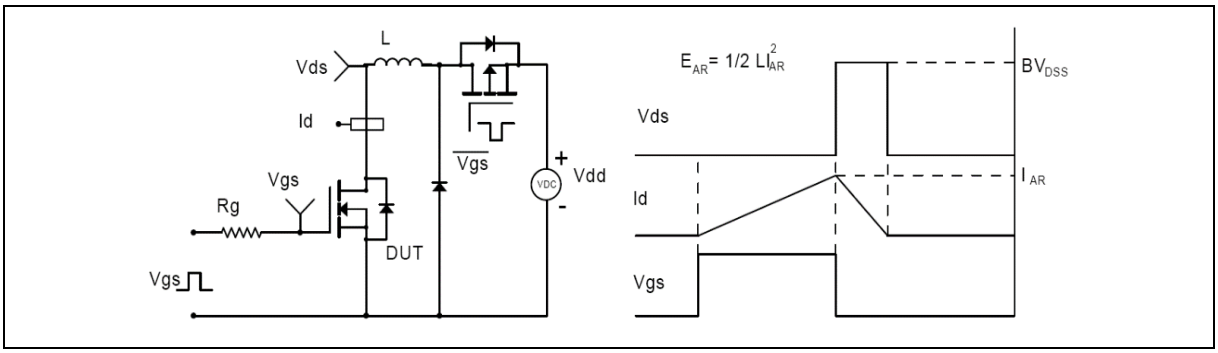


**Figure 3. Unclamped inductive switching (UIS) test circuit & waveforms**

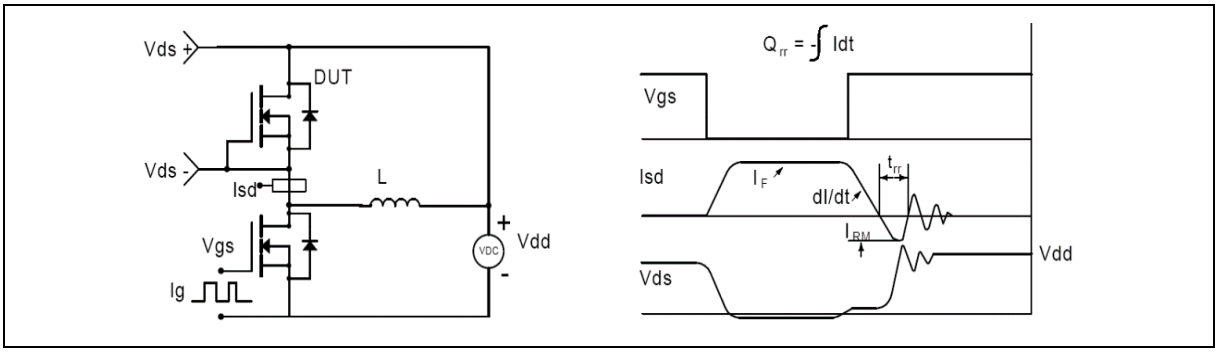


**Figure 4. Diode reverse recovery test circuit & waveforms**

## Package Information

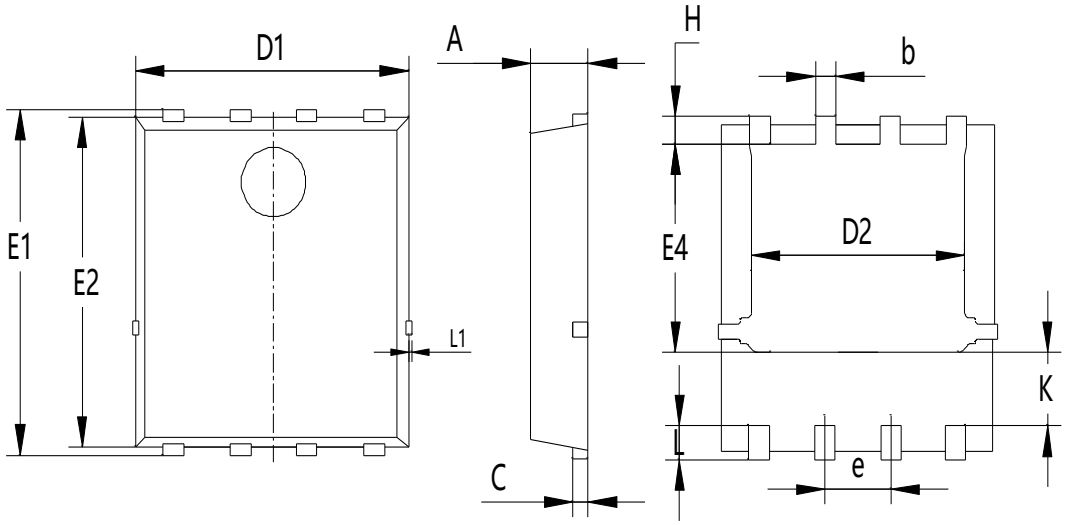


| Symbol | mm | | |
|---|---|---|---|
| | Min | Nom | Max |
| A | 1.00 | 1.10 | 1.20 |
| b | 0.30 | 0.40 | 0.50 |
| c | 0.154 | 0.254 | 0.354 |
| D1 | 5.00 | 5.20 | 5.40 |
| D2 | 3.80 | 4.10 | 4.25 |
| e | 1.17 | 1.27 | 1.37 |
| E1 | 5.95 | 6.15 | 6.35 |
| E2 | 5.66 | 5.86 | 6.06 |
| E4 | 3.52 | 3.72 | 3.92 |
| H | 0.40 | 0.50 | 0.60 |
| L | 0.30 | 0.60 | 0.70 |
| L1 | 0.12 REF | | |
| K | 1.15 | 1.30 | 1.45 |

Version 1: PDFN5*6-P package outline dimension

Oriental Semiconductor © Copyright Reserved V2.1

## Package Information

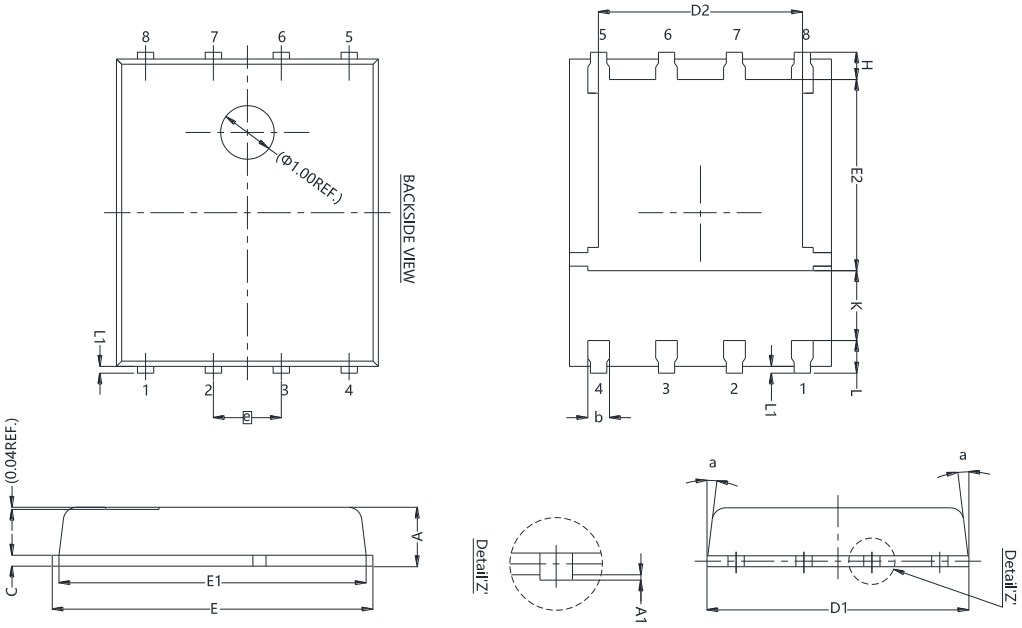


| Symbol | mm | | |
|---|---|---|---|
| | Min | Nom | Max |
| A | 0.90 | 1.00 | 1.10 |
| A1 | 0.00 | - | 0.05 |
| b | 0.33 | 0.41 | 0.51 |
| C | 0.20 | 0.25 | 0.30 |
| D1 | 4.80 | 4.90 | 5.00 |
| D2 | 3.61 | 3.81 | 3.96 |
| E | 5.90 | 6.00 | 6.10 |
| E1 | 5.70 | 5.75 | 5.80 |
| E2 | 3.38 | 3.58 | 3.78 |
| e | 1.27 BSC | | |
| H | 0.41 | 0.51 | 0.61 |
| K | 1.10 | - | - |
| L | 0.51 | 0.61 | 0.71 |
| L1 | 0.06 | 0.13 | 0.20 |
| a | 0° | - | 12° |

Version 2: PDFN5*6-M package outline dimension

Oriental Semiconductor © Copyright Reserved V2.1

## Ordering Information

| Package Type | Units/ Reel | Reels / Inner Box | Units/ Inner Box | Inner Boxes/ Carton Box | Units/ Carton Box |
|---|---|---|---|---|---|
| PDFN5*6-P | 5000 | 2 | 10000 | 5 | 50000 |
| PDFN5*6-M | 5000 | 2 | 10000 | 5 | 50000 |

## Product Information

| Product | Package | Pb Free | RoHS | Halogen Free |
|---|---|---|---|---|
| SFS04R02GF | PDFN5*6 | yes | yes | yes |

## Legal Disclaimer

The information given in this document shall in no event be regarded as a guarantee of conditions or characteristics. With respect to any examples or hints given herein, any typical values stated herein and/or any information regarding the application of the device, Oriental Semiconductor hereby disclaims any and all warranties and liabilities of any kind, including without limitation, warranties of non-infringement of intellectual property rights of any third party.

For further information on technology, delivery terms and conditions and prices, please contact the Oriental Semiconductor sales representatives (www.orientalsemi.com).

**© Oriental Semiconductor Co.,Ltd. All Rights Reserved**

ORIENTAL SEMICONDUCTOR

*A Power Semiconductor Innovator*