General Description

FSMOS® MOSFET is based on Oriental Semiconductor's unique device design to achieve low $R_{DS(ON)}$, low gate charge, fast switching and excellent avalanche characteristics. The high V_{th} series is specially designed to use in power supply systems with driving voltage of more than 10V.

Features

- Low $R_{DS(ON)}$ & FOM
- Extremely low switching loss
- Excellent reliability and uniformity
- Fast switching and soft recovery

RoHS compliant

Applications

- Switched mode power supply
- Motor driver
- Battery protection
- DC-DC convertor
- Inverter
- UPS

Key Performance Parameters

Parameter	Value	Unit
$V_{DS,\ min}$ @ $T_{j(max)}$	80	V
$I_{D,\ pulse}$	520	A
$R_{DS(ON),\ max}$ @ V_{GS}=10V	2.8	mΩ
Q_g	55.7	nC

Marking Information

Product Name	Package	Marking
SFS08R024UGNF	PDFN5x6	SFS08R024UGN

Package & Pin information



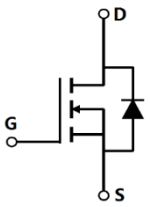

Oriental Semiconductor © Copyright Reserved V1.0

Absolute Maximum Ratings at T_j=25°C unless otherwise noted

Parameter	Symbol	Value	Unit
Drain-source voltage	V_{DS}	80	V
Gate-source voltage	V_{GS}	±20	V
Continuous drain current[1], T_C=25 °C	I_D	130	A
Pulsed drain current[2], T_C=25 °C	$I_{D,\ pulse}$	520	A
Continuous diode forward current[1], T_C=25 °C	I_S	130	A
Diode pulsed current[2], T_C=25 °C	$I_{S,\ pulse}$	520	A
Power dissipation[3], T_C=25 °C	P_D	132	W
Single pulsed avalanche energy[5]	E_{AS}	205	mJ
Operation and storage temperature	T_{stg}, T_j	-55 to 175	°C

Thermal Characteristics

Parameter	Symbol	Value	Unit
Thermal resistance, junction-case	$R_{\theta JC}$	1.14	°C/W
Thermal resistance, junction-ambient[4]	$R_{\theta JA}$	62	°C/W

Electrical Characteristics at T_j=25°C unless otherwise specified

Parameter	Symbol	Min.	Typ.	Max.	Unit	Test condition
Drain-source breakdown voltage	BV_{DSS}	80			V	V_{GS}=0 V, I_D=250 μA
Gate threshold voltage	$V_{GS(th)}$	2.0		4.0	V	V_{DS}=V_{GS}, I_D=250 μA
Drain-source on-state resistance	$R_{DS(ON)}$		2.4	2.8	mΩ	V_{GS}=10 V, I_D=50 A
Gate-source leakage current	I_{GSS}			100	nA	V_{GS}=20 V
				-100		V_{GS}=-20 V
Drain-source leakage current	I_{DSS}			1	μA	V_{DS}=80 V, V_{GS}=0 V
Gate resistance	R_G		2.4		Ω	f=1 MHz, Open drain

Oriental Semiconductor © Copyright Reserved V1.0

Dynamic Characteristics

Parameter	Symbol	Min.	Typ.	Max.	Unit	Test condition
Input capacitance	C_{iss}		4405		pF	V_{GS}=0 V, V_{DS}=25 V, f=100 kHz
Output capacitance	C_{oss}		1876		pF	
Reverse transfer capacitance	C_{rss}		88		pF	
Turn-on delay time	$t_{d(on)}$		30.6		ns	V_{GS}=10 V, V_{DS}=40 V, R_G=2 Ω, I_D=40 A
Rise time	t_r		14		ns	
Turn-off delay time	$t_{d(off)}$		51.4		ns	
Fall time	t_f		14		ns	

Gate Charge Characteristics

Parameter	Symbol	Min.	Typ.	Max.	Unit	Test condition
Total gate charge	Q_g		55.7		nC	V_{GS}=10 V, V_{DS}=40 V, I_D=40 A
Gate-source charge	Q_{gs}		17.3		nC	
Gate-drain charge	Q_{gd}		10.6		nC	
Gate plateau voltage	$V_{plateau}$		4.8		V	

Body Diode Characteristics

Parameter	Symbol	Min.	Typ.	Max.	Unit	Test condition
Diode forward voltage	V_{SD}			1.3	V	I_S=12 A, V_{GS}=0 V
Reverse recovery time	t_{rr}		56		ns	V_R=40 V, I_S=40 A, di/dt=100 A/μs
Reverse recovery charge	Q_{rr}		68		nC	
Peak reverse recovery current	I_{rrm}		2.1		A	

Note

1) Calculated continuous current based on maximum allowable junction temperature.
2) Repetitive rating; pulse width limited by max. junction temperature.
3) Pd is based on max. junction temperature, using junction-case thermal resistance.
4) The value of $R_{\theta JA}$ is measured with the device mounted on 1 inch^2 FR-4 board with 2oz. Copper, in a still air environment with T_a=25 °C.
5) V_{DD}=50 V,V_{GS}=10 V, L=0.3 mH, starting T_j=25 °C.

Oriental Semiconductor © Copyright Reserved V1.0

Electrical Characteristics Diagrams

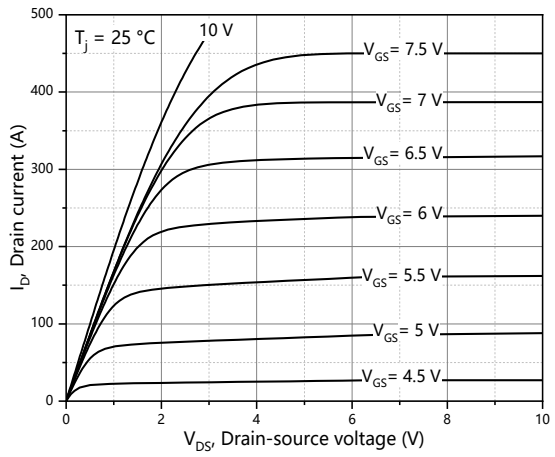

Figure 1. Typ. output characteristics

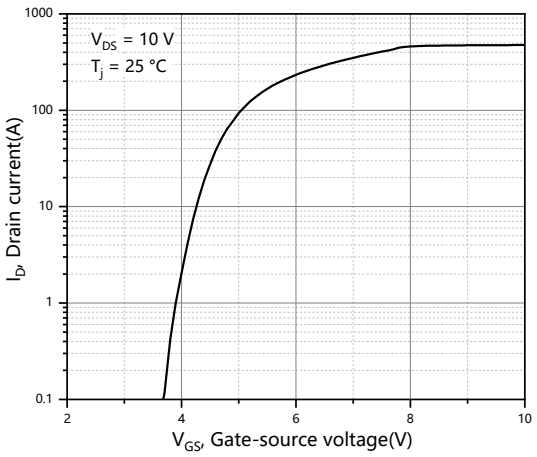

Figure 2. Typ. transfer characteristics

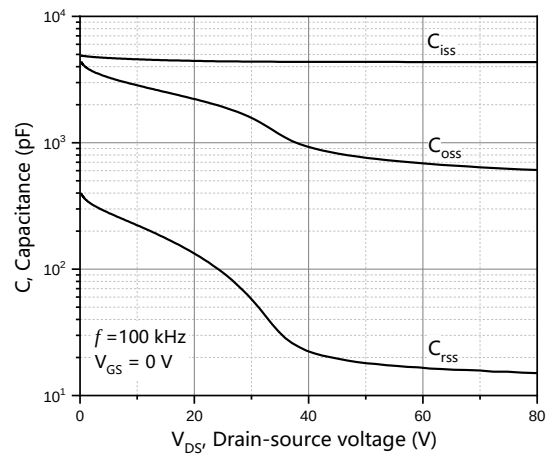

Figure 3. Typ. capacitances

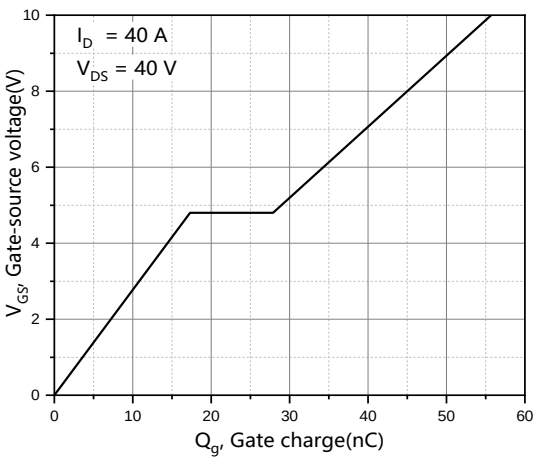

Figure 4. Typ. gate charge

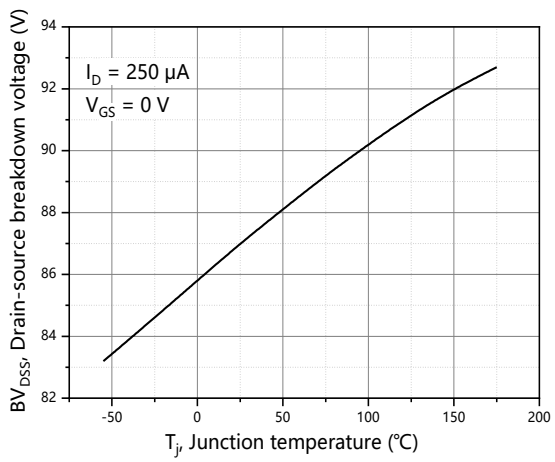

Figure 5. Drain-source breakdown voltage

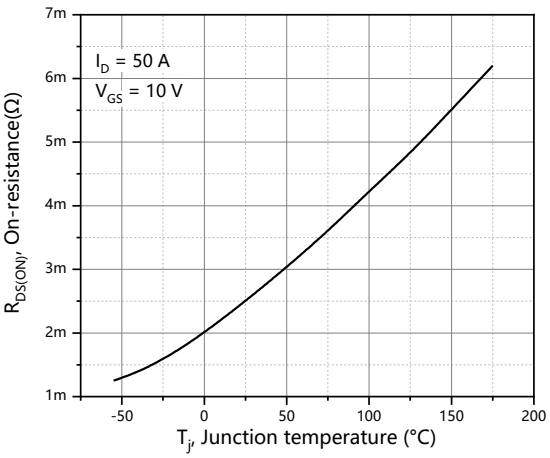

Figure 6. Drain-source on-state resistance

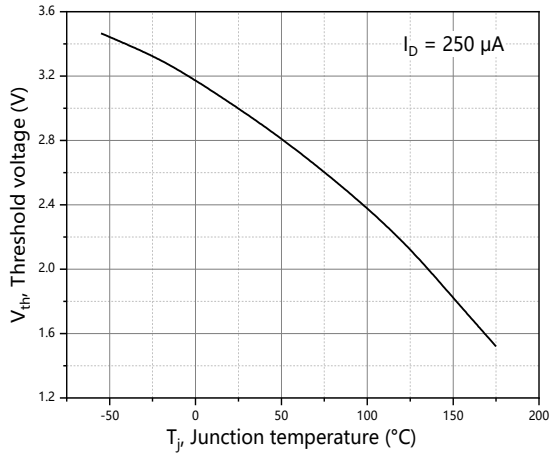

Figure 7. Threshold voltage

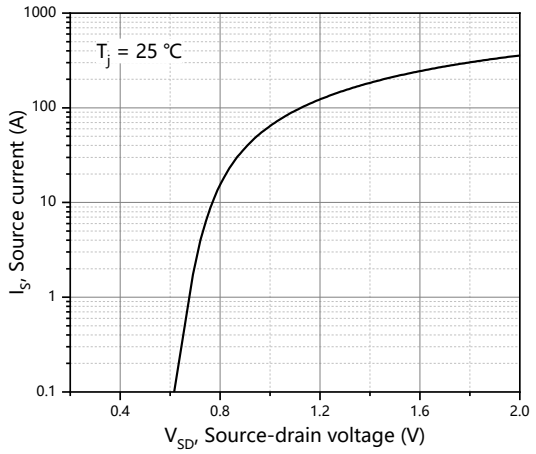

Figure 8. Forward characteristic of body diode

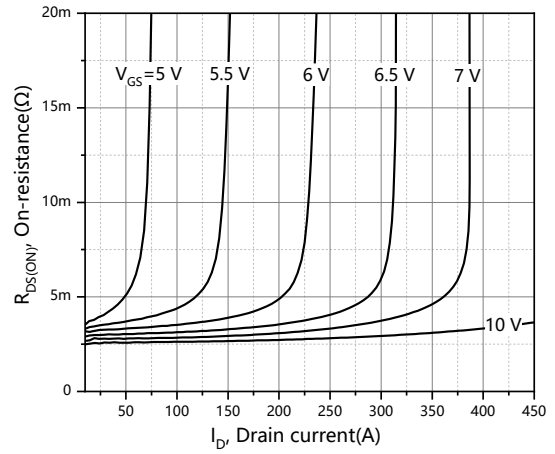

Figure 9. Drain-source on-state resistance

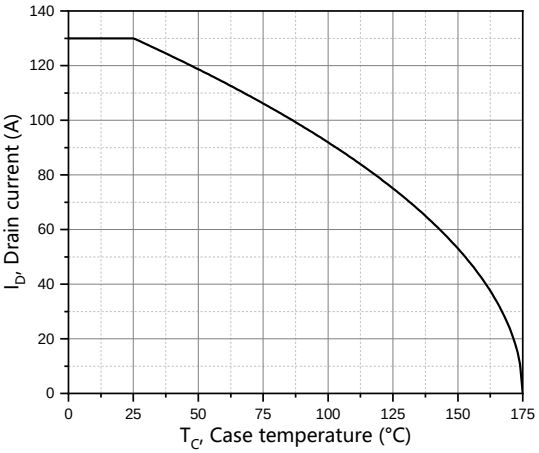

Figure 10. Drain current

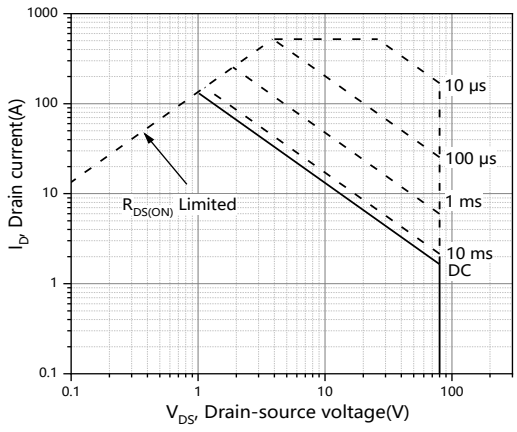

Figure 11. Safe operation area T_C=25 ℃

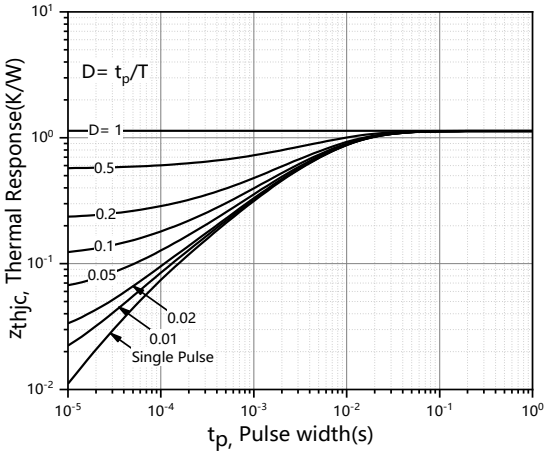

Figure 12. Max. transient thermal impedance

Test circuits and waveforms

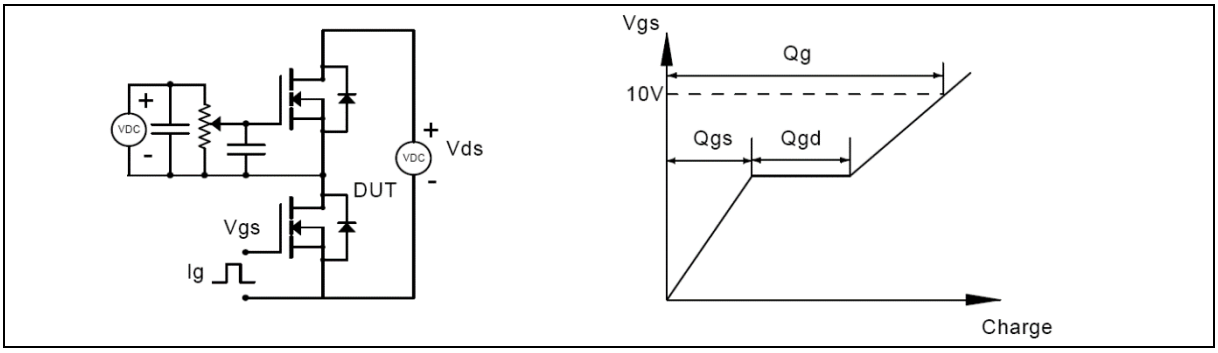

Figure 1. Gate charge test circuit & waveform

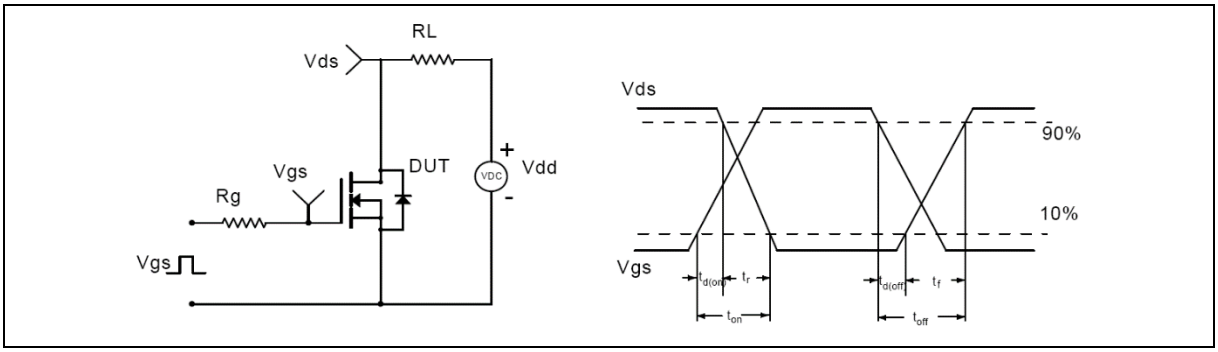

Figure 2. Switching time test circuit & waveforms

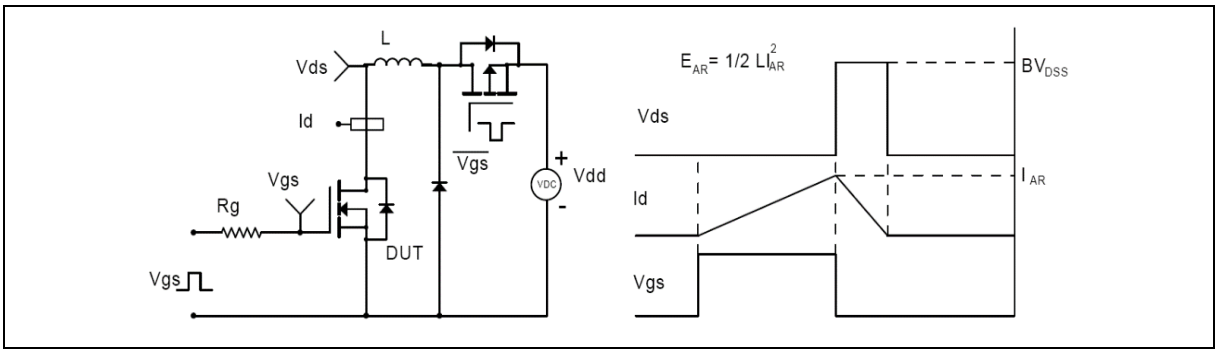

Figure 3. Unclamped inductive switching (UIS) test circuit & waveforms

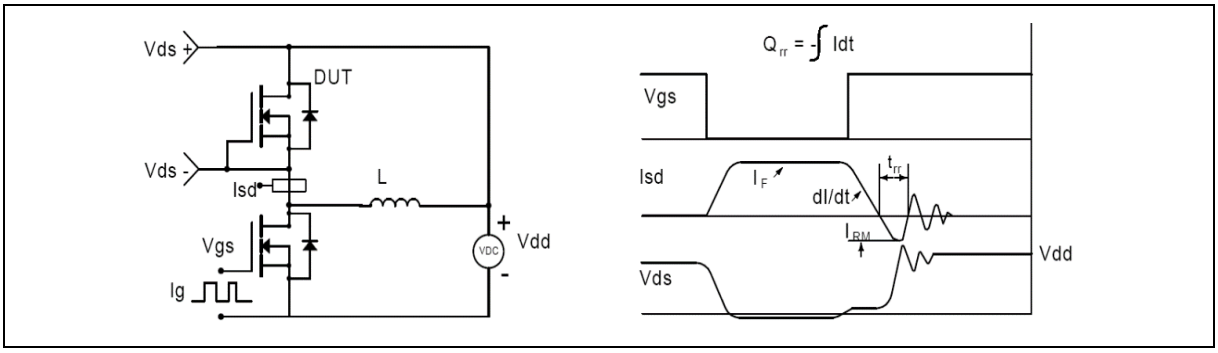

Figure 4. Diode reverse recovery test circuit & waveforms

Package Information

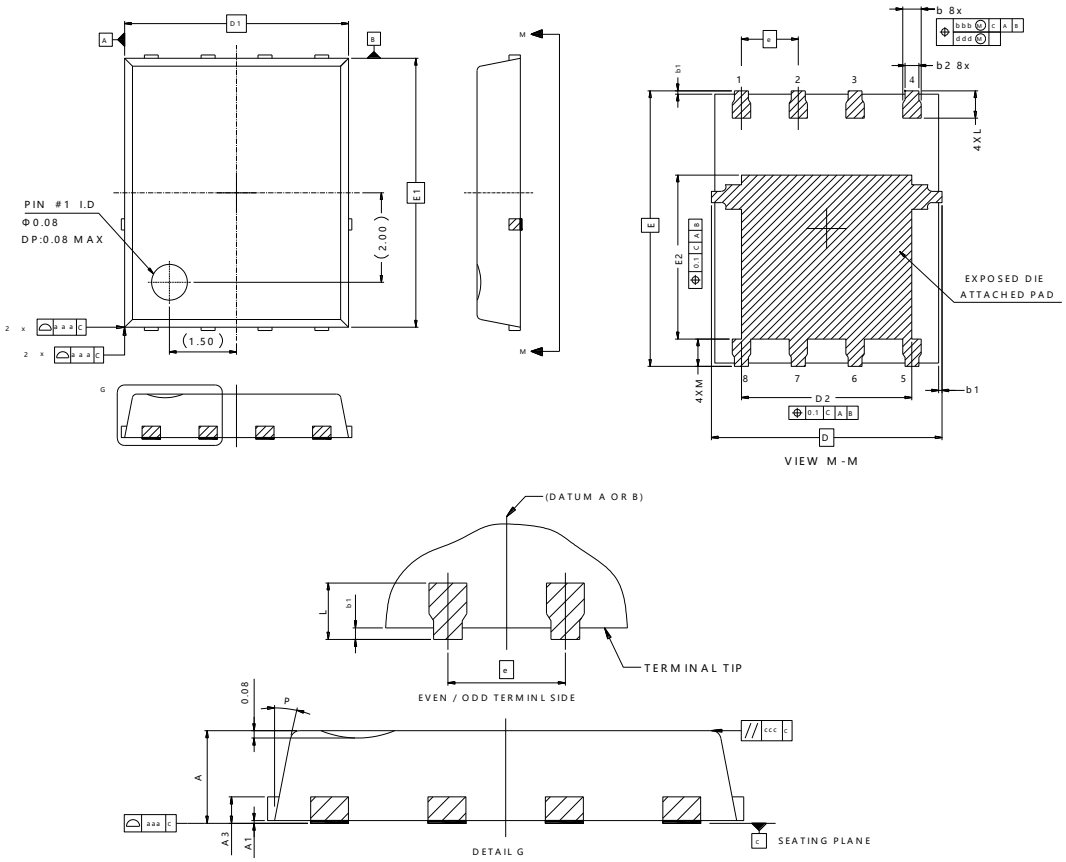

Symbol	mm	
	Min	Max
A	0.95	1.05
A1	0.00	0.05
A3	0.25 REF	
b	0.31	0.51
b1	0.03	0.13
b2	0.21	0.41
D	5.15 BSC	
D1	5.00 BSC	
D2	3.70	3.90
E	6.15 BSC	
E1	6.00 BSC	
E2	3.56	3.76
e	1.27 BSC	
L	0.51	0.71
M	0.51	0.71
P	10°	12°

Version 1: PDFN5x6-S package outline dimension

Oriental Semiconductor © Copyright Reserved V1.0

Package Information

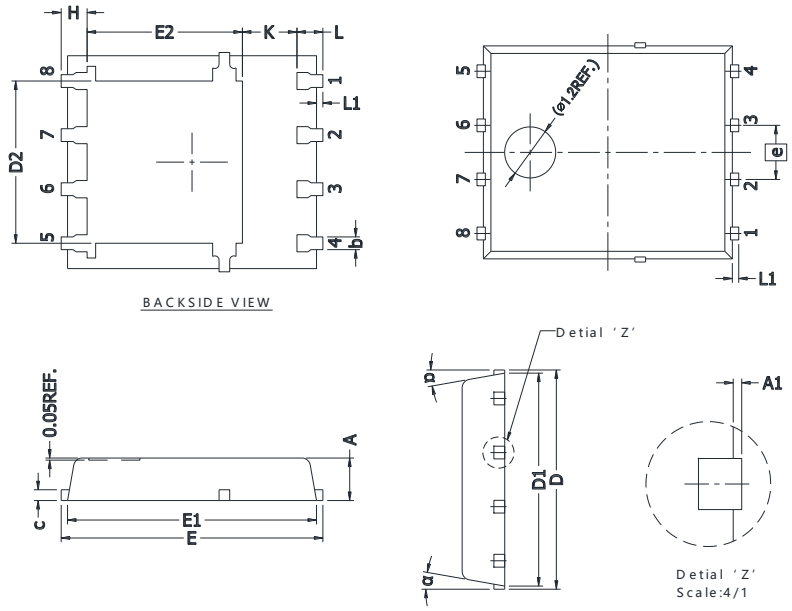

Symbol	mm		
	Min	Nom	Max
A	0.90	1.00	1.10
A1	0.00	-	0.05
b	0.30	0.40	0.50
c	0.20	0.25	0.30
D		5.15 BSC	
D1		5.00 BSC	
D2	3.76	3.81	3.86
E		6.15 BSC	
E1	5.80	5.85	5.90
E2	3.45	3.65	3.85
e		1.27 BSC	
H	0.51	0.61	0.71
K	1.10	-	-
L	0.51	0.61	0.71
L1	0.08	0.15	0.23
α	10º	11º	12º

Version 2: PDFN5x6-J package outline dimension

Oriental Semiconductor © Copyright Reserved V1.0

Ordering Information

Package Type	Units/ Reel	Reels/ Inner Box	Units/ Inner Box	Inner Boxes/ Carton Box	Units/ Carton Box
PDFN5x6-S	5000	1	5000	10	50000
PDFN5x6-J	5000	1	5000	5	25000

Product Information

Product	Package	Pb Free	RoHS	Halogen Free
SFS08R024UGNF	PDFN5x6	yes	yes	yes

Legal Disclaimer

The information given in this document shall in no event be regarded as a guarantee of conditions or characteristics. With respect to any examples or hints given herein, any typical values stated herein and/or any information regarding the application of the device, Oriental Semiconductor hereby disclaims any and all warranties and liabilities of any kind, including without limitation, warranties of non-infringement of intellectual property rights of any third party.

For further information on technology, delivery terms and conditions and prices, please contact the Oriental Semiconductor sales representatives (www.orientalsemi.com).

© Oriental Semiconductor Co.,Ltd. All Rights Reserved

ORIENTAL SEMICONDUCTOR

A Power Semiconductor Innovator