## General Description

FSMOS® MOSFET is based on Oriental Semiconductor's unique device design to achieve low $R_{DS(ON)}$, low gate charge, fast switching and excellent avalanche characteristics. The high $V_{th}$ series is specially designed to use in power supply systems with driving voltage of more than 10V.

## Features

- Low $R_{DS(ON)}$ & FOM
- Extremely low switching loss
- Excellent reliability and uniformity
- Fast switching and soft recovery

RoHS compliant

## Applications

- Switched mode power supply
- Motor driver
- Battery protection
- DC-DC convertor
- Solar inverter
- UPS and energy inverter

## Key Performance Parameters

| Parameter | Value | Unit |
|---|---|---|
| $V_{DS}$ | 120 | V |
| $I_{D,\ pulse}$ | 300 | A |
| $R_{DS(ON),\ max}$ @ $V_{GS}$=10V | 6.5 | mΩ |
| $Q_g$ | 68.3 | nC |

## Marking Information

| Product Name | Package | Marking |
|---|---|---|
| SFS12R08PNF | TO220 | SFS12R08PN |

## Package & Pin information




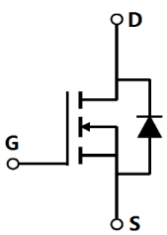


Oriental Semiconductor © Copyright Reserved V1.0

## Absolute Maximum Ratings at $T_j$=25°C unless otherwise noted

| Parameter | Symbol | Value | Unit |
|---|---|---|---|
| Drain-source voltage | $V_{DS}$ | 120 | V |
| Gate-source voltage | $V_{GS}$ | ±20 | V |
| Continuous drain current[1], $T_C$=25 °C | $I_D$ | 100 | A |
| Pulsed drain current[2], $T_C$=25 °C | $I_{D,\ pulse}$ | 300 | A |
| Continuous diode forward current[1], $T_C$=25 °C | $I_S$ | 100 | A |
| Diode pulsed current[2], $T_C$=25 °C | $I_{S,\ pulse}$ | 300 | A |
| Power dissipation[3], $T_C$=25 °C | $P_D$ | 170 | W |
| Single pulsed avalanche energy[5] | $E_{AS}$ | 125 | mJ |
| Operation and storage temperature | $T_{stg}$, $T_j$ | -55 to 150 | °C |

## Thermal Characteristics

| Parameter | Symbol | Value | Unit |
|---|---|---|---|
| Thermal resistance, junction-case | $R_{\theta JC}$ | 0.74 | °C/W |
| Thermal resistance, junction-ambient[4] | $R_{\theta JA}$ | 62 | °C/W |

## Electrical Characteristics at $T_j$=25°C unless otherwise specified

| Parameter | Symbol | Min. | Typ. | Max. | Unit | Test condition |
|---|---|---|---|---|---|---|
| Drain-source breakdown voltage | $BV_{DSS}$ | 120 | | | V | $V_{GS}$=0 V, $I_D$=250 μA |
| Gate threshold voltage | $V_{GS(th)}$ | 3.0 | | 5.0 | V | $V_{DS}$=$V_{GS}$, $I_D$=250 μA |
| Drain-source on-state resistance | $R_{DS(ON)}$ | | 5.6 | 6.5 | mΩ | $V_{GS}$=10 V, $I_D$=20 A |
| Gate-source leakage current | $I_{GSS}$ | | | 100 | nA | $V_{GS}$=20 V |
| | | | | -100 | | $V_{GS}$=-20 V |
| Drain-source leakage current | $I_{DSS}$ | | | 1 | μA | $V_{DS}$=120 V, $V_{GS}$=0 V |
| Gate resistance | $R_G$ | | 3 | | Ω | $f$=1 MHz, Open drain |

Oriental Semiconductor © Copyright Reserved V1.0

## Dynamic Characteristics

| Parameter | Symbol | Min. | Typ. | Max. | Unit | Test condition |
|---|---|---|---|---|---|---|
| Input capacitance | $C_{iss}$ | | 5425 | | pF | $V_{GS}$=0 V, $V_{DS}$=25 V, $f$=100 kHz |
| Output capacitance | $C_{oss}$ | | 1701 | | pF | |
| Reverse transfer capacitance | $C_{rss}$ | | 153 | | pF | |
| Turn-on delay time | $t_{d(on)}$ | | 30.6 | | ns | $V_{GS}$=10 V, $V_{DS}$=60 V, $R_G$=2 Ω, $I_D$=30 A |
| Rise time | $t_r$ | | 46.3 | | ns | |
| Turn-off delay time | $t_{d(off)}$ | | 41 | | ns | |
| Fall time | $t_f$ | | 14.1 | | ns | |

## Gate Charge Characteristics

| Parameter | Symbol | Min. | Typ. | Max. | Unit | Test condition |
|---|---|---|---|---|---|---|
| Total gate charge | $Q_g$ | | 68.3 | | nC | $V_{GS}$=10 V, $V_{DS}$=60 V, $I_D$=30 A |
| Gate-source charge | $Q_{gs}$ | | 27.4 | | nC | |
| Gate-drain charge | $Q_{gd}$ | | 15.2 | | nC | |
| Gate plateau voltage | $V_{plateau}$ | | 5.9 | | V | |

## Body Diode Characteristics

| Parameter | Symbol | Min. | Typ. | Max. | Unit | Test condition |
|---|---|---|---|---|---|---|
| Diode forward voltage | $V_{SD}$ | | | 1.3 | V | $I_S$=20 A, $V_{GS}$=0 V |
| Reverse recovery time | $t_{rr}$ | | 78.3 | | ns | $V_R$=60 V, $I_S$=30 A, di/dt=100 A/μs |
| Reverse recovery charge | $Q_{rr}$ | | 169 | | nC | |
| Peak reverse recovery current | $I_{rrm}$ | | 3.7 | | A | |

**Note**

1) Calculated continuous current based on maximum allowable junction temperature.
2) Repetitive rating; pulse width limited by max. junction temperature.
3) Pd is based on max. junction temperature, using junction-case thermal resistance.
4) The value of $R_{\theta JA}$ is measured with the device mounted on 1 $in^2$ FR-4 board with 2oz. Copper, in a still air environment with $T_a$=25 °C.
5) $V_{DD}$=50 V,$V_{GS}$=10 V, L=0.3 mH, starting $T_j$=25 °C.

Oriental Semiconductor © Copyright Reserved V1.0

## Electrical Characteristics Diagrams

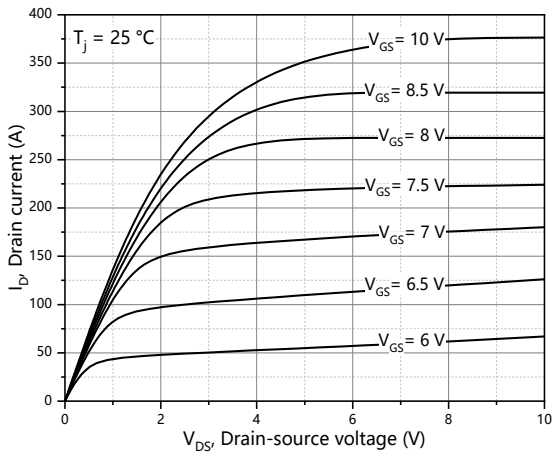


**Figure 1. Typ. output characteristics**

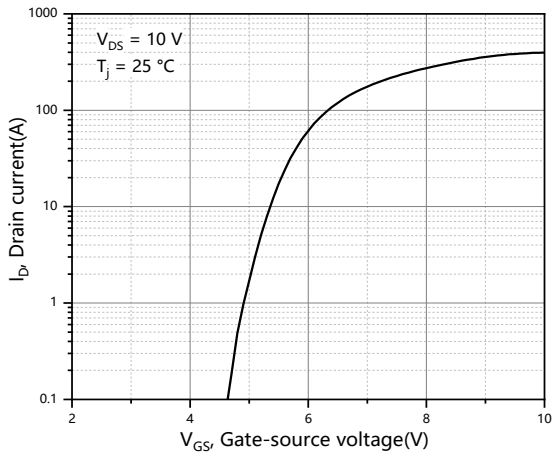


**Figure 2. Typ. transfer characteristics**

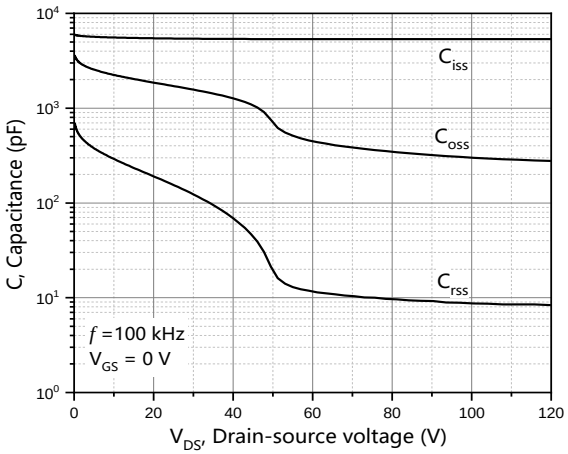


**Figure 3. Typ. capacitances**

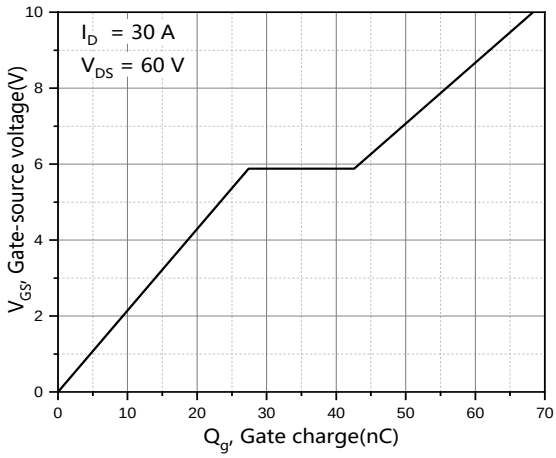


**Figure 4. Typ. gate charge**

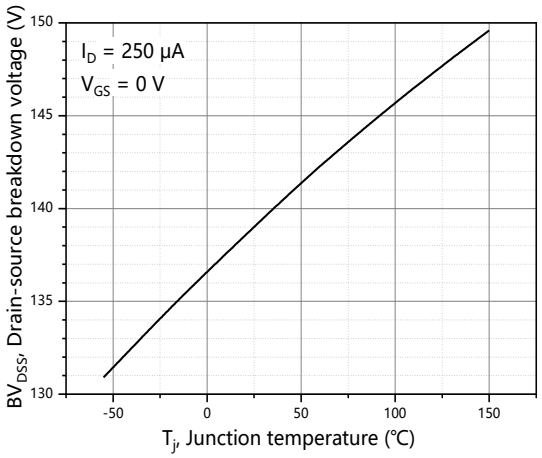


**Figure 5. Drain-source breakdown voltage**

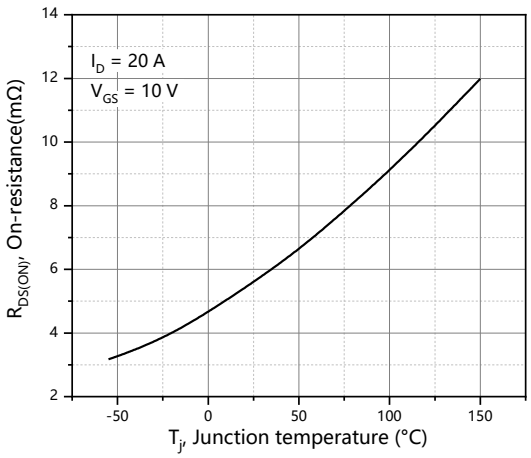


**Figure 6. Drain-source on-state resistance**

Oriental Semiconductor © Copyright Reserved V1.0

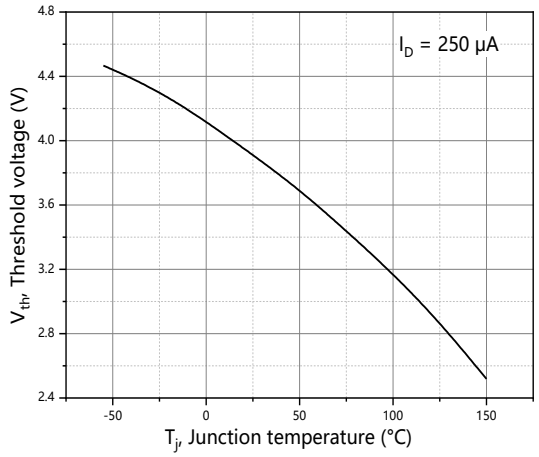


**Figure 7. Threshold voltage**

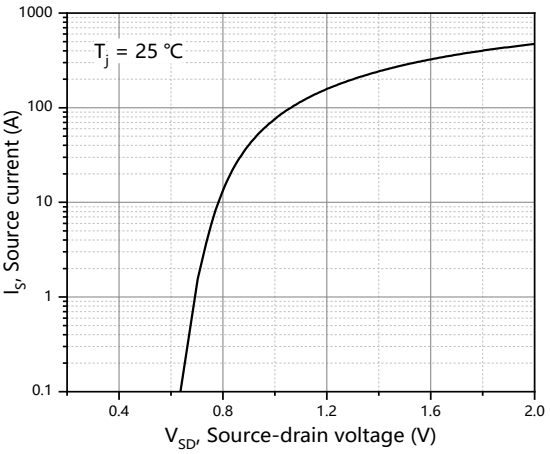


**Figure 8. Forward characteristic of body diode**

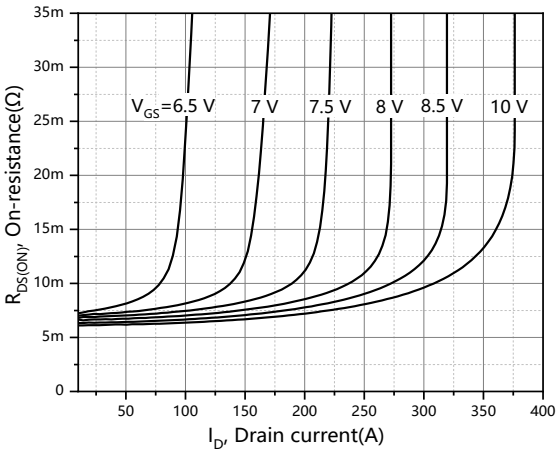


**Figure 9. Drain-source on-state resistance**

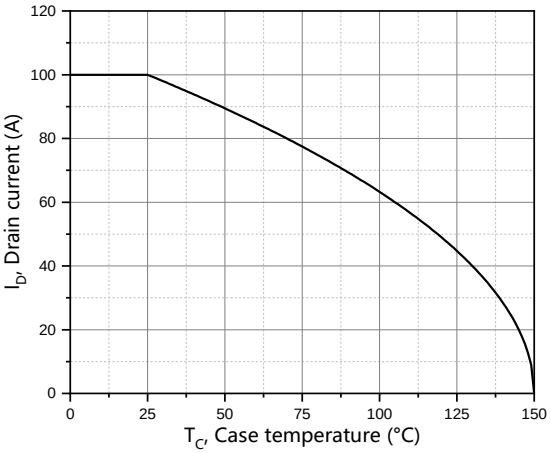


**Figure 10. Drain current**

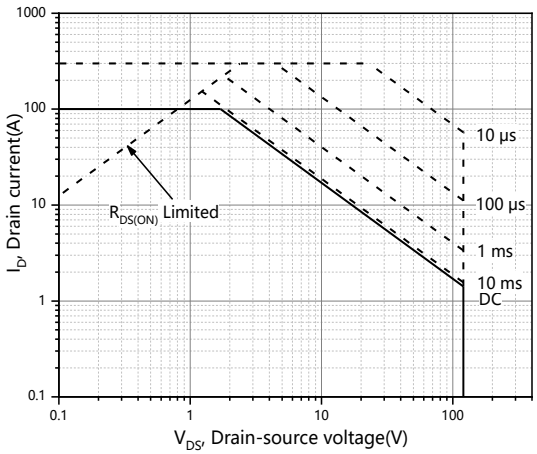


**Figure 11. Safe operation area $T_C$=25 ℃**

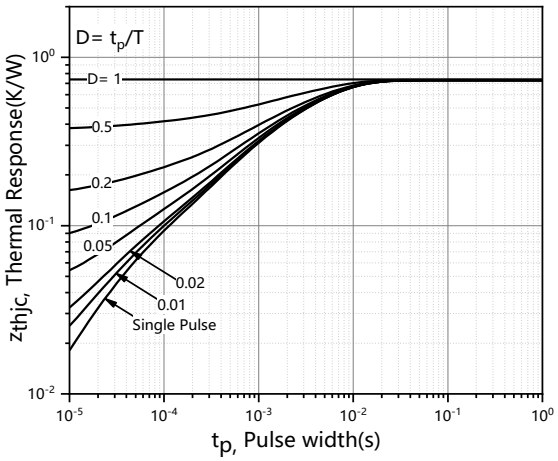


**Figure 12. Max. transient thermal impedance**

Oriental Semiconductor © Copyright Reserved V1.0

## Test circuits and waveforms

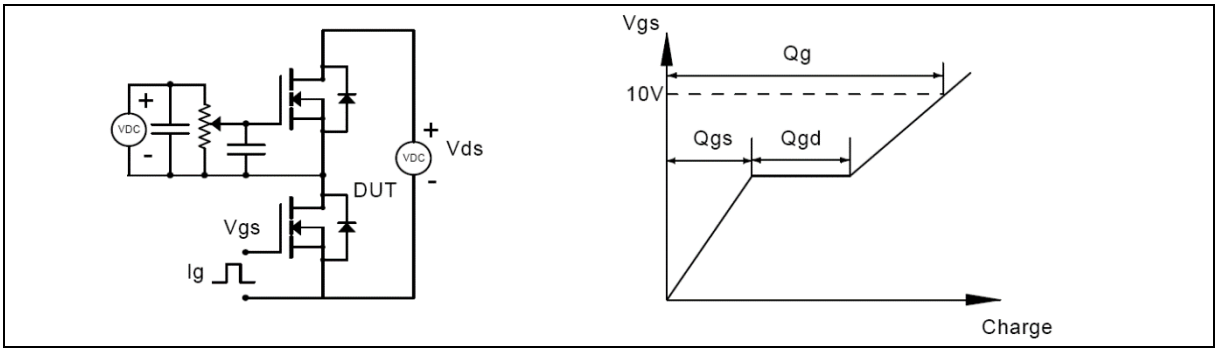


**Figure 1. Gate charge test circuit & waveform**

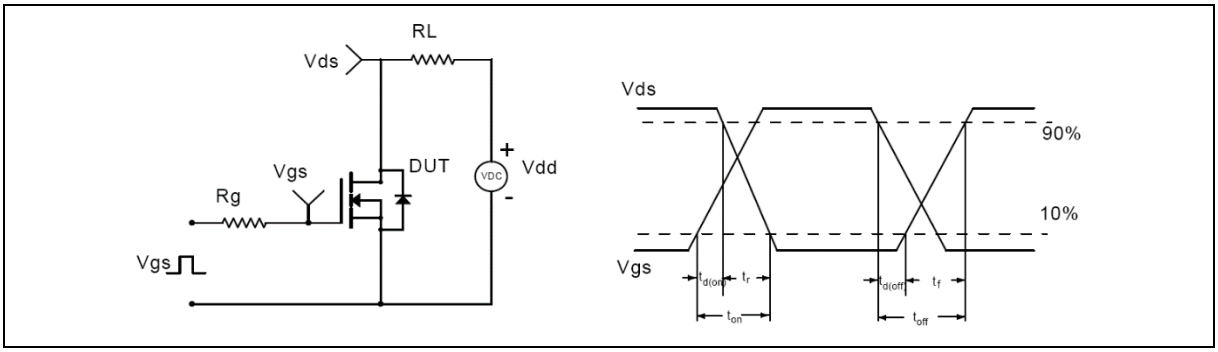


**Figure 2. Switching time test circuit & waveforms**

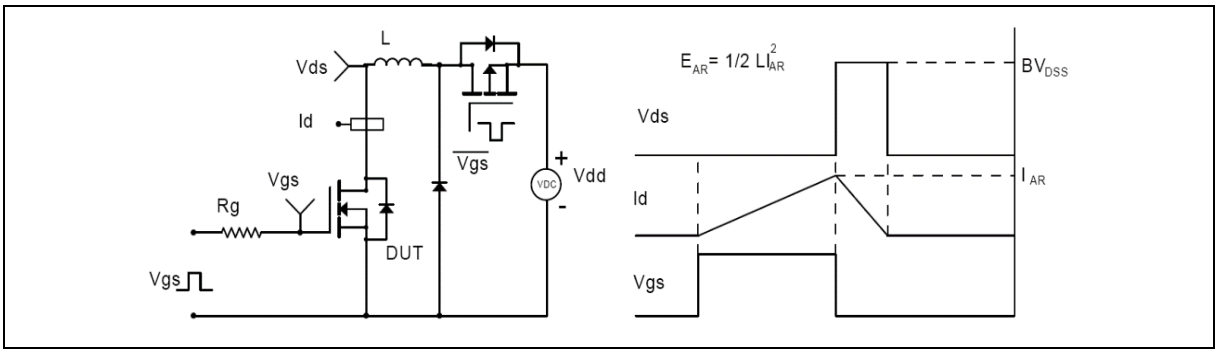


**Figure 3. Unclamped inductive switching (UIS) test circuit & waveforms**

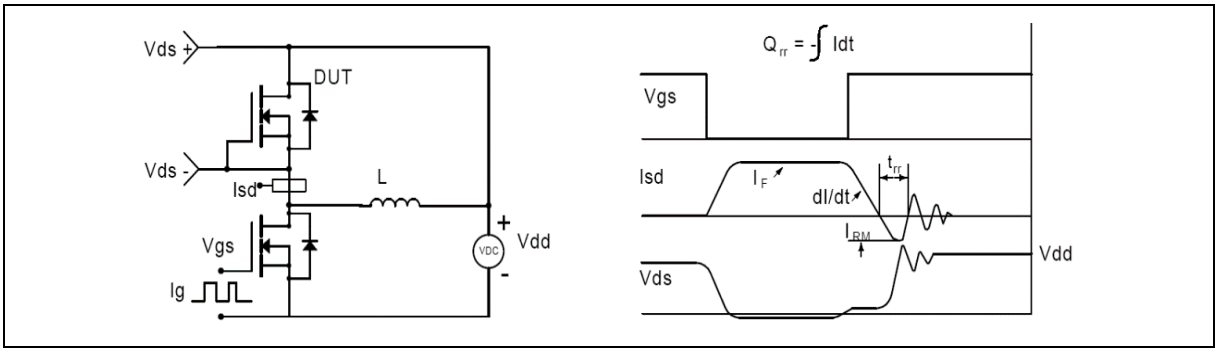


**Figure 4. Diode reverse recovery test circuit & waveforms**

Oriental Semiconductor © Copyright Reserved V1.0

## Package Information

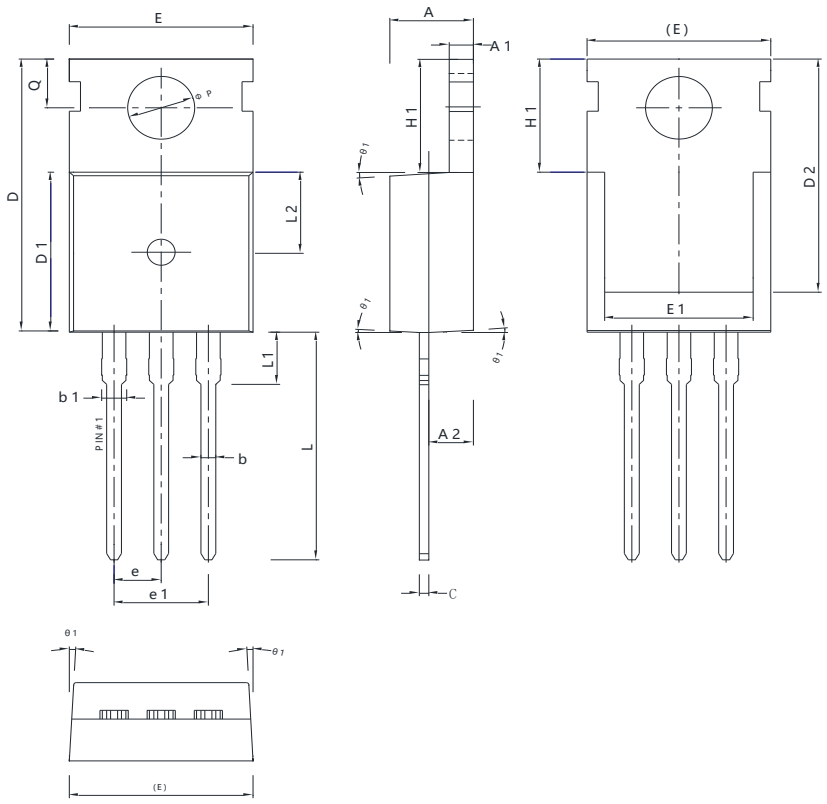


| Symbol | mm | | |
|---|---|---|---|
| | Min | Nom | Max |
| A | 4.40 | 4.50 | 4.60 |
| A1 | 1.27 | 1.30 | 1.33 |
| A2 | 2.30 | 2.40 | 2.50 |
| b | 0.70 | - | 0.90 |
| b1 | 1.27 | - | 1.40 |
| c | 0.45 | 0.50 | 0.60 |
| D | 15.30 | 15.70 | 16.10 |
| D1 | 9.10 | 9.20 | 9.30 |
| D2 | 13.10 | - | 13.70 |
| E | 9.70 | 9.90 | 10.20 |
| E1 | 7.80 | 8.00 | 8.20 |
| e | 2.54 BSC | | |
| e1 | 5.08 BSC | | |
| H1 | 6.30 | 6.50 | 6.70 |
| L | 12.78 | 13.08 | 13.38 |
| L1 | - | - | 3.50 |
| L2 | 4.60 REF | | |
| ΦP | 3.55 | 3.60 | 3.65 |
| Q | 2.73 | - | 2.87 |
| θ1 | 1° | 3° | 5° |

Version 1: TO220-J package outline dimension

Oriental Semiconductor © Copyright Reserved V1.0

## Ordering Information

| Package Type | Units/ Tube | Tubes/ Inner Box | Units/ Inner Box | Inner Boxes/ Carton Box | Units/ Carton Box |
|---|---|---|---|---|---|
| TO220-J | 50 | 20 | 1000 | 5 | 5000 |

## Product Information

| Product | Package | Pb Free | RoHS | Halogen Free |
|---|---|---|---|---|
| SFS12R08PNF | TO220 | yes | yes | yes |

## Legal Disclaimer

The information given in this document shall in no event be regarded as a guarantee of conditions or characteristics. With respect to any examples or hints given herein, any typical values stated herein and/or any information regarding the application of the device, Oriental Semiconductor hereby disclaims any and all warranties and liabilities of any kind, including without limitation, warranties of non-infringement of intellectual property rights of any third party.

For further information on technology, delivery terms and conditions and prices, please contact the Oriental Semiconductor sales representatives (www.orientalsemi.com).

**© Oriental Semiconductor Co.,Ltd. All Rights Reserved**

ORIENTAL SEMICONDUCTOR

*A Power Semiconductor Innovator*