N-Channel 500V (D-S) Super Junction Power MOSFET

PRODUCT SUMMARY		
V_{DS} (V)	500	
$R_{DS(on)}$ (Ω)	V_{GS} = 10 V	0.55
Q_g (Max.) (nC)	52	
Q_{gs} (nC)	13	
Q_{gd} (nC)	18	
Configuration	Single	

FEATURES

- Low Gate Charge Q_g Results in Simple Drive Requirement
- Improved Gate, Avalanche and Dynamic dV/dt Ruggedness
- Fully Characterized Capacitance and Avalanche Voltage and Current
- Effective C_{oss} Specified
- Compliant to RoHS directive 2002/95/EC

Available

RoHS* COMPLIANT

APPLICATIONS

- Switch Mode Power Supply (SMPS)
- Uninterruptible Power Supply

TO-252

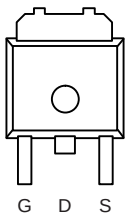

Top View

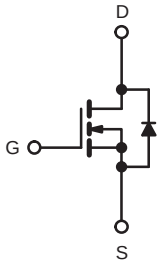

N-Channel MOSFET

ABSOLUTE MAXIMUM RATINGS T_C = 25 °C, unless otherwise noted					
PARAMETER			SYMBOL	LIMIT	UNIT
Drain-Source Voltage			V_{DS}	500	V
Gate-Source Voltage			V_{GS}	± 30	
Continuous Drain Current	V_{GS} at 10 V	T_C = 25 °C	I_D	7	A
Continuous Drain Current		T_C = 100 °C		4.2	
Pulsed Drain Current[a, e]			I_{DM}	44	
Linear Derating Factor				0.48	W/°C
Single Pulse Avalanche Energy[b, e]			E_{AS}	275	mJ
Repetitive Avalanche Current[a, e]			I_{AR}	11	A
Repetitive Avalanche Energy[a]			E_{AR}	6.0	mJ
Maximum Power Dissipation	T_C = 25 °C		P_D	60	W
Peak Diode Recovery dV/dt[c]			dV/dt	6.9	V/ns
Operating Junction and Storage Temperature Range			T_J, T_{stg}	- 55 to + 150	°C
Soldering Recommendations (Peak Temperature)	for 10 s			300[d]	
Mounting Torque	6-32 or M3 screw			10	lbf · in
				1.1	N · m

Notes

a. Repetitive rating; pulse width limited by maximum junction temperature (see fig. 11).
b. Starting T_J = 25 °C, L = 4.5 mH, R_G = 25 Ω, I_{AS} = 11 A (see fig. 12).
c. I_{SD} ≤ 11 A, dI/dt ≤ 140 A/µs, V_{DD} ≤ V_{DS}, T_J ≤ 150 °C.
d. 1.6 mm from case.
e. Drain current limited by maximum junction temperature.

* Pb containing terminations are not RoHS compliant, exemptions may apply

THERMAL RESISTANCE RATINGS				
PARAMETER	**SYMBOL**	**TYP.**	**MAX.**	**UNIT**
Maximum Junction-to-Ambient	R_{thJA}	-	65	°C/W
Maximum Junction-to-Case (Drain)	R_{thJC}	-	2.1	

SPECIFICATIONS T_J = 25 °C, unless otherwise noted							
PARAMETER	**SYMBOL**	**TEST CONDITIONS**		**MIN.**	**TYP.**	**MAX.**	**UNIT**
Static							
Drain-Source Breakdown Voltage	V_{DS}	V_{GS} = 0 V, I_D = 250 µA		500	-	-	V
V_{DS} Temperature Coefficient	$\Delta V_{DS}/T_J$	Reference to 25 °C, I_D = 1 mA		-	610	-	mV/°C
Gate-Source Threshold Voltage	$V_{GS(th)}$	V_{DS} = V_{GS}, I_D = 250 µA		2.0	-	4.0	V
Gate-Source Leakage	I_{GSS}	V_{GS} = ± 30 V		-	-	± 100	nA
Zero Gate Voltage Drain Current	I_{DSS}	V_{DS} = 500 V, V_{GS} = 0 V		-	-	25	µA
		V_{DS} = 400 V, V_{GS} = 0 V, T_J = 125 °C		-	-	250	
Drain-Source On-State Resistance	$R_{DS(on)}$	V_{GS} = 10 V	I_D = 4.0 A[b]	-	0.55	-	Ω
Forward Transconductance	g_{fs}	V_{DS} = 50 V, I_D = 6.6 A		6.1	-	-	S
Dynamic							
Input Capacitance	C_{iss}	V_{GS} = 0 V, V_{DS} = 25 V, f = 1.0 MHz, see fig. 5		-	1423	-	pF
Output Capacitance	C_{oss}			-	208	-	
Reverse Transfer Capacitance	C_{rss}			-	8.1	-	
Output Capacitance	C_{oss}	V_{GS} = 0 V	V_{DS} = 1.0 V, f = 1.0 MHz	-	2000	-	
			V_{DS} = 400 V, f = 1.0 MHz	-	55	-	
Effective Output Capacitance	C_{oss} eff.		V_{DS} = 0 V to 400 V[c]	-	97	-	
Total Gate Charge	Q_g	V_{GS} = 10 V	I_D = 11 A, V_{DS} = 400 V see fig. 6 and 13[b]	-	-	52	nC
Gate-Source Charge	Q_{gs}			-	-	13	
Gate-Drain Charge	Q_{gd}			-	-	18	
Turn-On Delay Time	$t_{d(on)}$	V_{DD} = 250 V, I_D = 11 A R_G = 9.1 Ω, R_D = 22 Ω, see fig. 10[b]		-	14	-	ns
Rise Time	t_r			-	35	-	
Turn-Off Delay Time	$t_{d(off)}$			-	32	-	
Fall Time	t_f			-	28	-	
Drain-Source Body Diode Characteristics							
Continuous Source-Drain Diode Current	I_S	MOSFET symbol showing the integral reverse p - n junction diode 		-	-	7.0	A
Pulsed Diode Forward Current[a]	I_{SM}			-	-	44	
Body Diode Voltage	V_{SD}	T_J = 25 °C, I_S = 11 A, V_{GS} = 0 V[b]		-	-	1.5	V
Body Diode Reverse Recovery Time	t_{rr}	T_J = 25 °C, I_F = 11 A, dI/dt = 100 A/µs[b]		-	510	770	ns
Body Diode Reverse Recovery Charge	Q_{rr}			-	3.4	5.1	µC
Forward Turn-On Time	t_{on}	Intrinsic turn-on time is negligible (turn-on is dominated by L_S and L_D)					

Notes

a. Repetitive rating; pulse width limited by maximum junction temperature (see fig. 11).
b. Pulse width ≤ 300 µs; duty cycle ≤ 2 %.
c. C_{oss} eff. is a fixed capacitance that gives the same charging time as C_{oss} while V_{DS} is rising from 0 % to 80 % V_{DS}.

TYPICAL CHARACTERISTICS 25 °C, unless otherwise noted

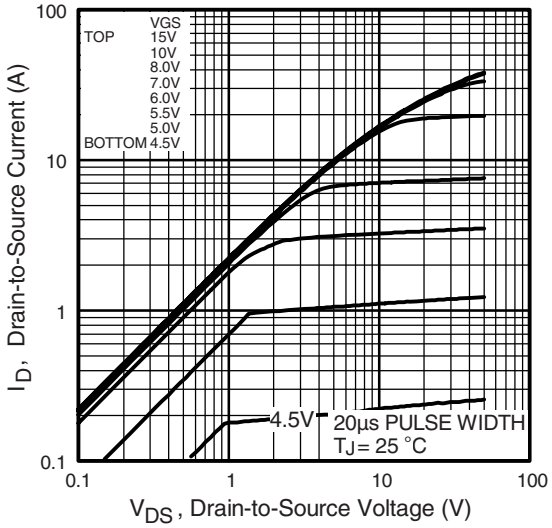

Fig. 1 - Typical Output Characteristics

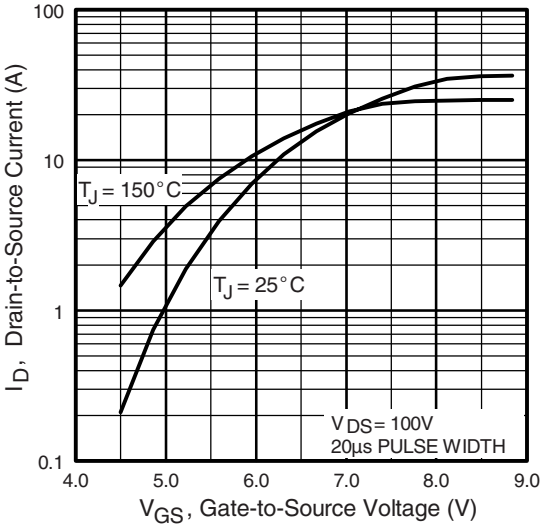

Fig. 3 - Typical Transfer Characteristics

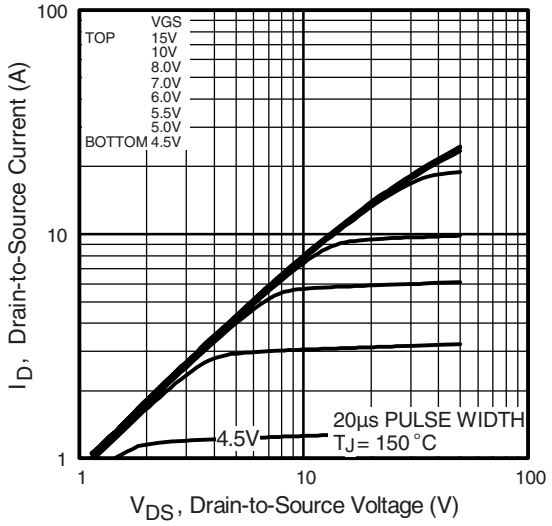

Fig. 2 - Typical Output Characteristics

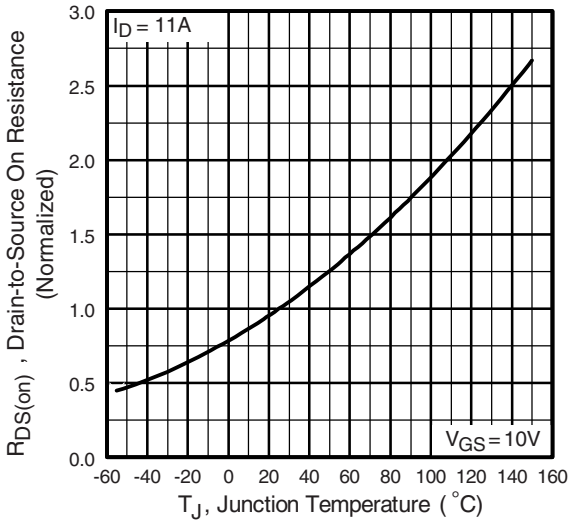

Fig. 4 - Normalized On-Resistance vs. Temperature

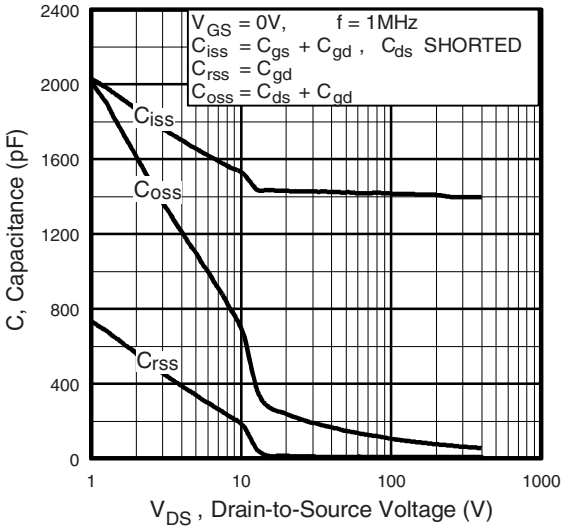

Fig. 5 - Typical Capacitance vs. Drain-to-Source Voltage

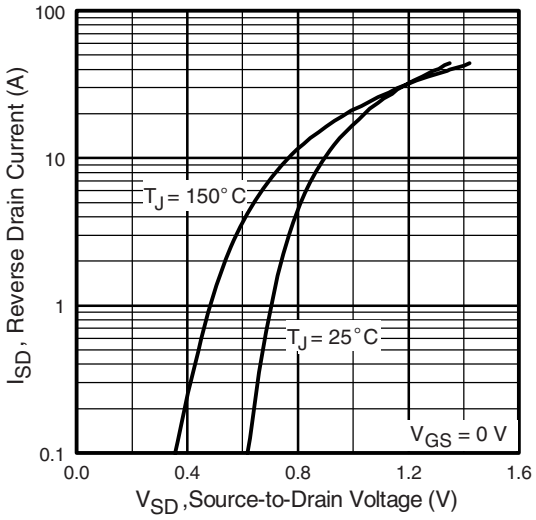

Fig. 7 - Typical Source-Drain Diode Forward Voltage

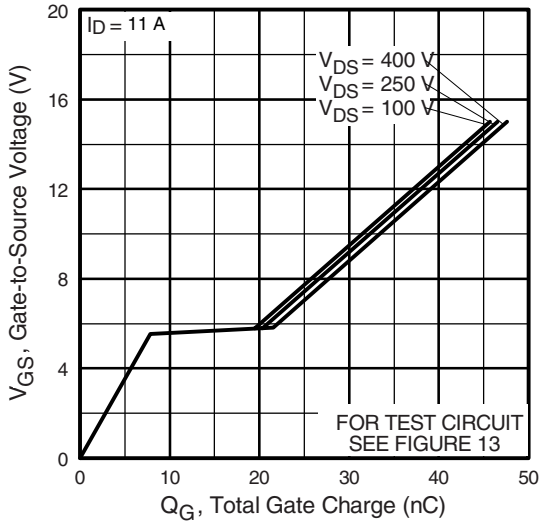

Fig. 6 - Typical Gate Charge vs. Gate-to-Source Voltage

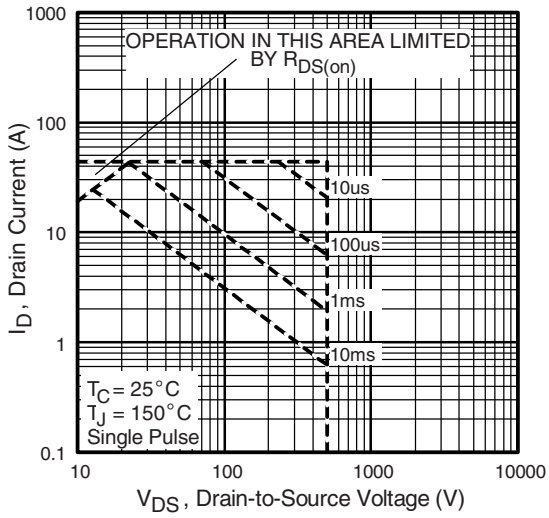

Fig. 8 - Maximum Safe Operating Area

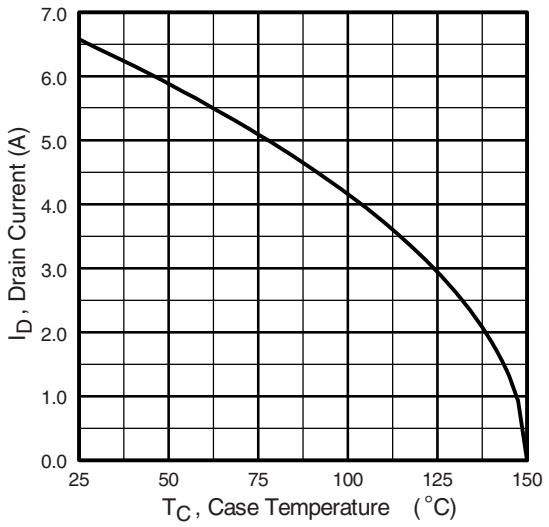

Fig. 9 - Maximum Drain Current vs. Case Temperature

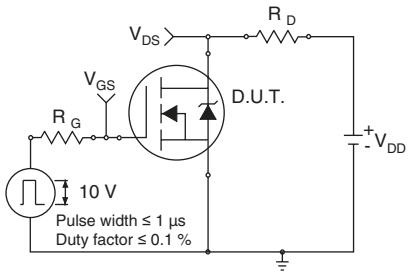

Fig. 10a - Switching Time Test Circuit

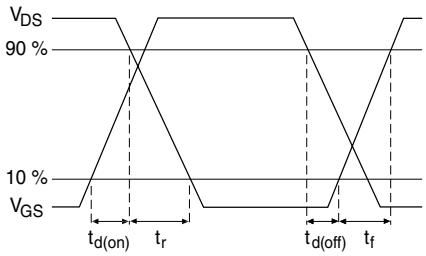

Fig. 10b - Switching Time Waveforms

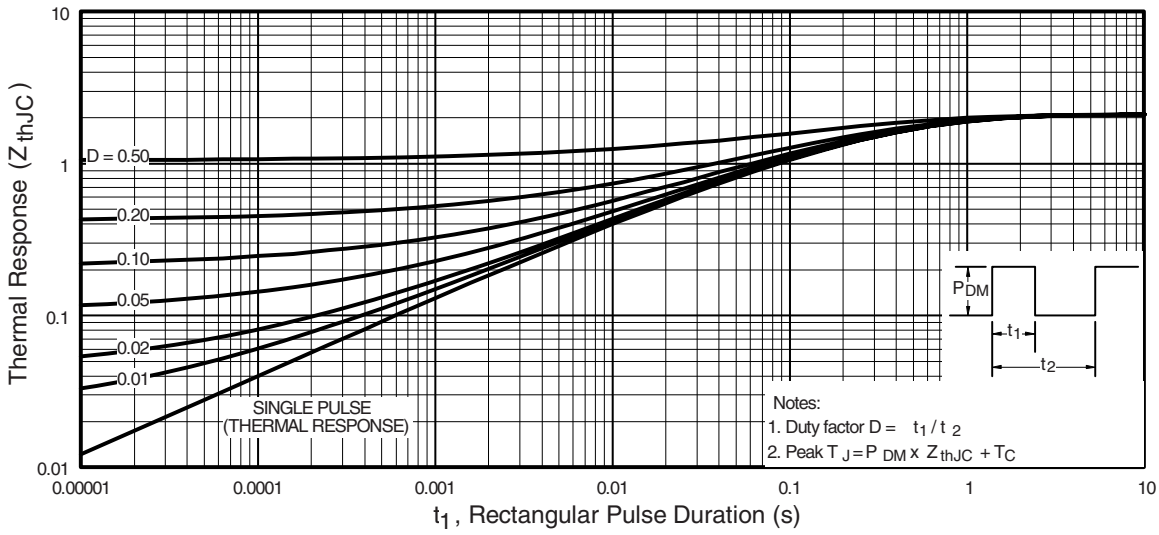

Fig. 11 - Maximum Effective Transient Thermal Impedance, Junction-to-Case

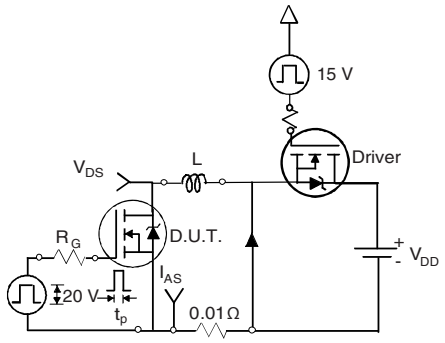

Fig. 12a - Unclamped Inductive Test Circuit

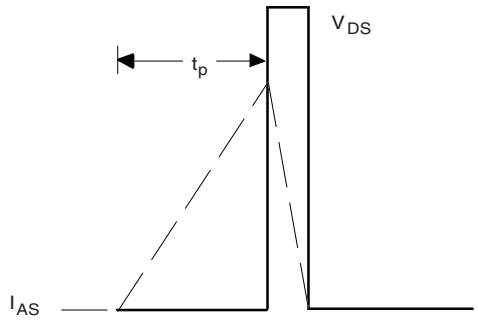

Fig. 12b - Unclamped Inductive Waveforms

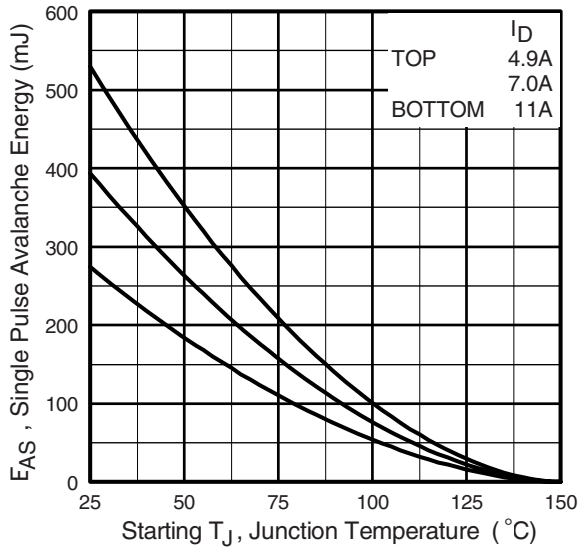

Fig. 12c - Maximum Avalanche Energy vs. Drain Current

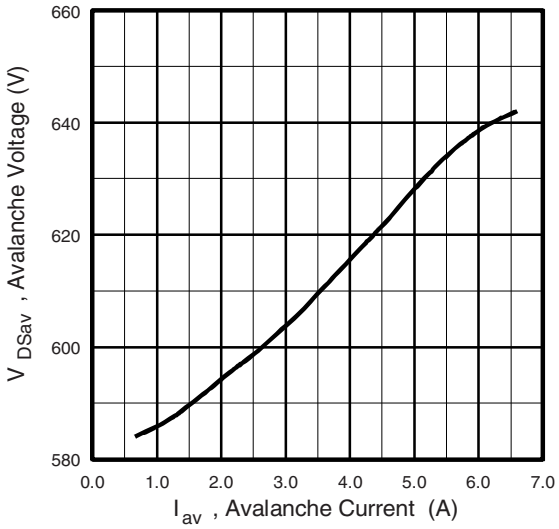

Fig. 12d -Typical Drain-to-Source Voltage vs. Avalanche Current

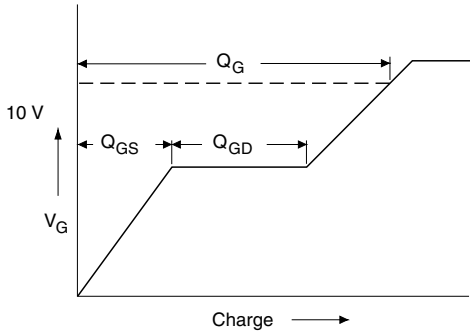

Fig. 13a - Basic Gate Charge Waveform

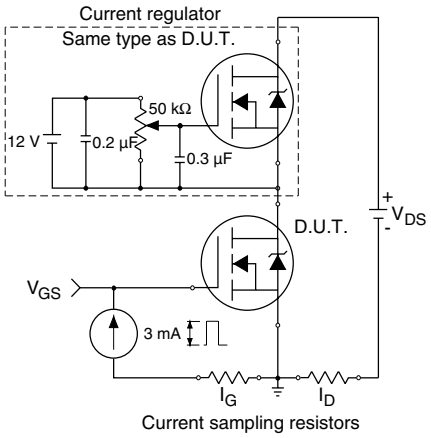

Fig. 13b - Gate Charge Test Circuit

Peak Diode Recovery dV/dt Test Circuit

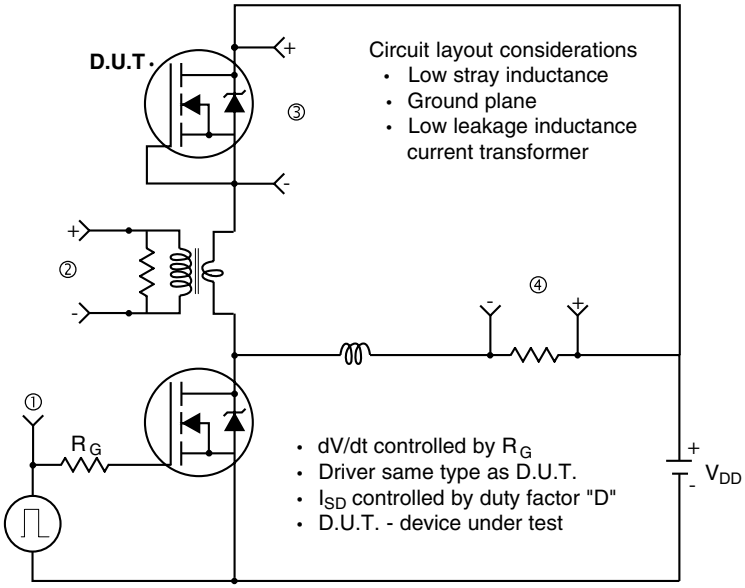

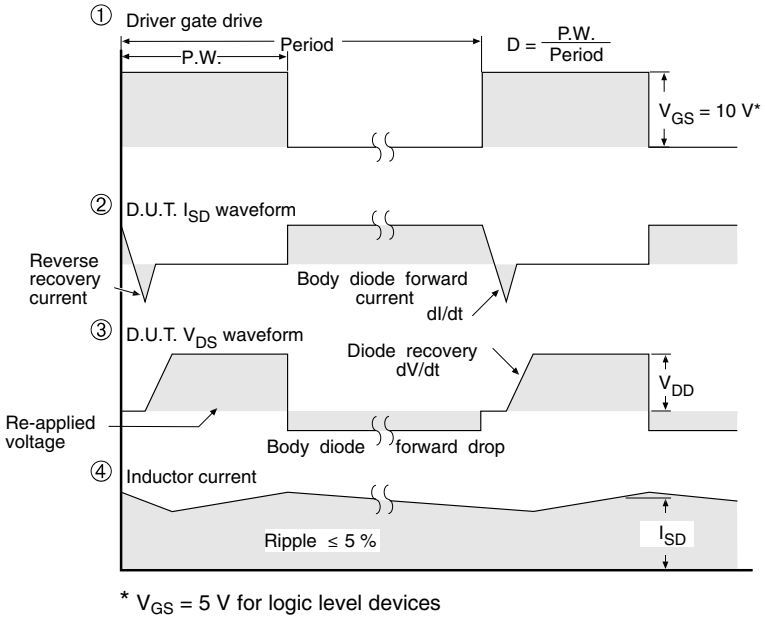

* V_{GS} = 5 V for logic level devices

Fig. 14 - For N-Channel

TO-252AA CASE OUTLINE

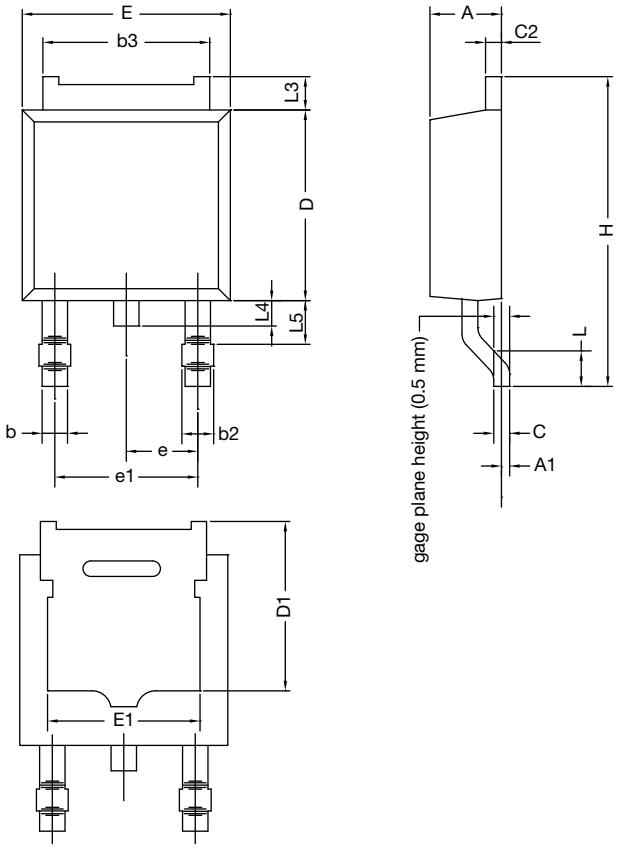

	MILLIMETERS		INCHES	
DIM.	**MIN.**	**MAX.**	**MIN.**	**MAX.**
A	2.18	2.38	0.086	0.094
A1	-	0.127	-	0.005
b	0.64	0.88	0.025	0.035
b2	0.76	1.14	0.030	0.045
b3	4.95	5.46	0.195	0.215
C	0.46	0.61	0.018	0.024
C2	0.46	0.89	0.018	0.035
D	5.97	6.22	0.235	0.245
D1	5.21	-	0.205	-
E	6.35	6.73	0.250	0.265
E1	4.32	-	0.170	-
H	9.40	10.41	0.370	0.410
e	2.28 BSC		0.090 BSC	
e1	4.56 BSC		0.180 BSC	
L	1.40	1.78	0.055	0.070
L3	0.89	1.27	0.035	0.050
L4	-	1.02	-	0.040
L5	1.14	1.52	0.045	0.060
ECN: X12-0247-Rev. M, 24-Dec-12 DWG: 5347				

Note

- Dimension L3 is for reference only.

Disclaimer

All products due to improve reliability, function or design or for other reasons, product specifications and data are subject to change without notice.

Taiwan VBsemi Electronics Co., Ltd., branches, agents, employees, and all persons acting on its or their representatives (collectively, the "Taiwan VBsemi"), assumes no responsibility for any errors, inaccuracies or incomplete data contained in the table or any other any disclosure of any information related to the product.(www.VBsemi.com)

Taiwan VBsemi makes no guarantee, representation or warranty on the product for any particular purpose of any goods or continuous production. To the maximum extent permitted by applicable law on Taiwan VBsemi relinquished: (1) any application and all liability arising out of or use of any products; (2) any and all liability, including but not limited to special, consequential damages or incidental ; (3) any and all implied warranties, including a particular purpose, non-infringement and merchantability guarantee.

Statement on certain types of applications are based on knowledge of the product is often used in a typical application of the general product VBsemi Taiwan demand that the Taiwan VBsemi of. Statement on whether the product is suitable for a particular application is non-binding. It is the customer's responsibility to verify specific product features in the products described in the specification is appropriate for use in a particular application. Parameter data sheets and technical specifications can be provided may vary depending on the application and performance over time. All operating parameters, including typical parameters must be made by customer's technical experts validated for each customer application. Product specifications do not expand or modify Taiwan VBsemi purchasing terms and conditions, including but not limited to warranty herein.

Unless expressly stated in writing, Taiwan VBsemi products are not intended for use in medical, life saving, or life sustaining applications or any other application. Wherein VBsemi product failure could lead to personal injury or death, use or sale of products used in Taiwan VBsemi such applications using client did not express their own risk. Contact your authorized Taiwan VBsemi people who are related to product design applications and other terms and conditions in writing.

The information provided in this document and the company's products without a license, express or implied, by estoppel or otherwise, to any intellectual property rights granted to the VBsemi act or document. Product names and trademarks referred to herein are trademarks of their respective representatives will be all.

Material Category Policy

Taiwan VBsemi Electronics Co., Ltd., hereby certify that all of the products are determined to be oHS compliant and meets the definition of restrictions under Directive of the European Parliament 2011/65 / EU, 2011 Nian. 6. 8 Ri Yue restrict the use of certain hazardous substances in electrical and electronic equipment (EEE) - modification, unless otherwise specified as inconsistent.(www.VBsemi.com)

Please note that some documents may still refer to Taiwan VBsemi RoHS Directive 2002/95 / EC. We confirm that all products identified as consistent with the Directive 2002/95 / EC European Directive 2011/65 /.

Taiwan VBsemi Electronics Co., Ltd. hereby certify that all of its products comply identified as halogen-free halogen-free standards required by the JEDEC JS709A. Please note that some Taiwanese VBsemi documents still refer to the definition of IEC 61249-2-21, and we are sure that all products conform to confirm compliance with IEC 61249-2-21 standard level JS709A.