N-Channel 30 V (D-S) 175 °C MOSFET

PRODUCT SUMMARY	
V_{DS} (V)	30
$R_{DS(on)}$ (Ω) at V_{GS} = 10 V	0.006
$R_{DS(on)}$ (Ω) at V_{GS} = 4.5 V	0.008
I_D (A)	70
Configuration	Single
Package	TO-220AB/ TO-263

FEATURES

- TrenchFET® power MOSFET
- Package with low thermal resistance
- 100 % R_g and UIS tested

RoHS COMPLIANT
HALOGEN FREE

TO-220AB

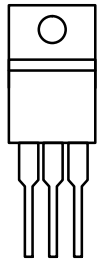

Top View

TO-263

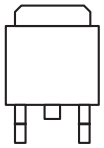

Top View

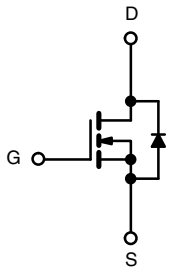

N-Channel MOSFET

ABSOLUTE MAXIMUM RATINGS (T_C = 25 °C, unless otherwise noted)				
PARAMETER		**SYMBOL**	**LIMIT**	**UNIT**
Drain-Source Voltage		V_{DS}	30	V
Gate-Source Voltage		V_{GS}	± 20	
Continuous Drain Current	T_C = 25 °C [a]	I_D	70	A
	T_C = 125 °C		50	
Continuous Source Current (Diode Conduction) [a]		I_S	70	
Pulsed Drain Current [b]		I_{DM}	250	
Single Pulse Avalanche Current	L = 0.1 mH	I_{AS}	33	
Single Pulse Avalanche Energy		E_{AS}	54	mJ
Maximum Power Dissipation [b]	T_C = 25 °C	P_D	71	W
	T_C = 125 °C		23	
Operating Junction and Storage Temperature Range		T_J, T_{stg}	-55 to +175	°C

THERMAL RESISTANCE RATINGS				
PARAMETER		**SYMBOL**	**LIMIT**	**UNIT**
Junction-to-Ambient	PCB Mount [c]	R_{thJA}	50	°C/W
Junction-to-Case (Drain)		R_{thJC}	2.1	

Notes

a. Package limited.
b. Pulse test; pulse width ≤ 300 µs, duty cycle ≤ 2 %.
c. When mounted on 1" square PCB (FR4 material).

SPECIFICATIONS (T_C = 25 °C, unless otherwise noted)							
PARAMETER	**SYMBOL**	**TEST CONDITIONS**		**MIN.**	**TYP.**	**MAX.**	**UNIT**
Static							
Drain-Source Breakdown Voltage	V_{DS}	V_{GS} = 0 V, I_D = 250 µA		30	-	-	V
Gate-Source Threshold Voltage	$V_{GS(th)}$	V_{DS} = V_{GS}, I_D = 250 µA		1.5	2.0	2.5	
Gate-Source Leakage	I_{GSS}	V_{DS} = 0 V, V_{GS} = ± 20 V		-	-	± 100	nA
Zero Gate Voltage Drain Current	I_{DSS}	V_{GS} = 0 V	V_{DS} = 30 V	-	-	1	µA
		V_{GS} = 0 V	V_{DS} = 30 V, T_J = 125 °C	-	-	50	
		V_{GS} = 0 V	V_{DS} = 30 V, T_J = 175 °C	-	-	150	
On-State Drain Current [a]	$I_{D(on)}$	V_{GS} = 10 V	V_{DS} ≥ 5 V	70	-	-	A
Drain-Source On-State Resistance [a]	$R_{DS(on)}$	V_{GS} = 10 V	I_D = 20 A	-	0.006	-	Ω
		V_{GS} = 10 V	I_D = 20 A, T_J = 125 °C	-	0.0094	-	
		V_{GS} = 10 V	I_D = 20 A, T_J = 175 °C	-	0.0115	-	
		V_{GS} = 4.5 V	I_D = 15 A	-	0.008	-	
Forward Transconductance [b]	g_{fs}	V_{DS} = 15 V, I_D = 15 A		-	100	-	S
Dynamic [b]							
Input Capacitance	C_{iss}	V_{GS} = 0 V	V_{DS} = 25 V, f = 1 MHz	-	1850	2200	pF
Output Capacitance	C_{oss}			-	260	400	
Reverse Transfer Capacitance	C_{rss}			-	95	200	
Total Gate Charge [c]	Q_g	V_{GS} = 10 V	V_{DS} = 20 V, I_D = 50 A	-	46	75	nC
Gate-Source Charge [c]	Q_{gs}			-	10	-	
Gate-Drain Charge [c]	Q_{gd}			-	8	-	
Gate Resistance	R_g	f = 1 MHz		1.3	2.8	4.5	Ω
Turn-On Delay Time [c]	$t_{d(on)}$	V_{DD} = 20 V, R_L = 0.4 Ω I_D ≅ 50 A, V_{GEN} = 10 V, R_g = 1 Ω		-	9	15	ns
Rise Time [c]	t_r			-	19	30	
Turn-Off Delay Time [c]	$t_{d(off)}$			-	26	40	
Fall Time [c]	t_f			-	10	15	
Source-Drain Diode Ratings and Characteristics [b]							
Pulsed Current [a]	I_{SM}			-	-	200	A
Forward Voltage	V_{SD}	I_F = 30 A, V_{GS} = 0 V		-	0.87	1.5	V

Notes

a. Pulse test; pulse width ≤ 300 µs, duty cycle ≤ 2 %.
b. Guaranteed by design, not subject to production testing.
c. Independent of operating temperature.

Stresses beyond those listed under "Absolute Maximum Ratings" may cause permanent damage to the device. These are stress ratings only, and functional operation of the device at these or any other conditions beyond those indicated in the operational sections of the specifications is not implied. Exposure to absolute maximum rating conditions for extended periods may affect device reliability.

TYPICAL CHARACTERISTICS (T_A = 25 °C, unless otherwise noted)

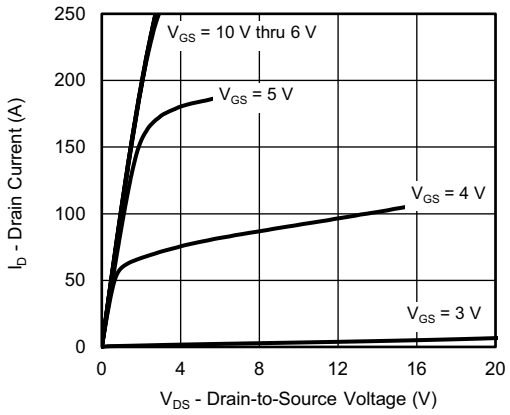

Output Characteristics

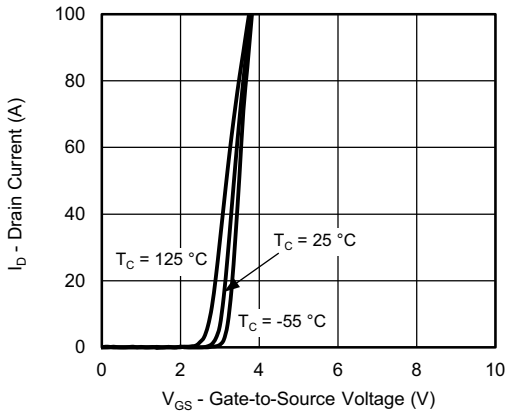

Transfer Characteristics

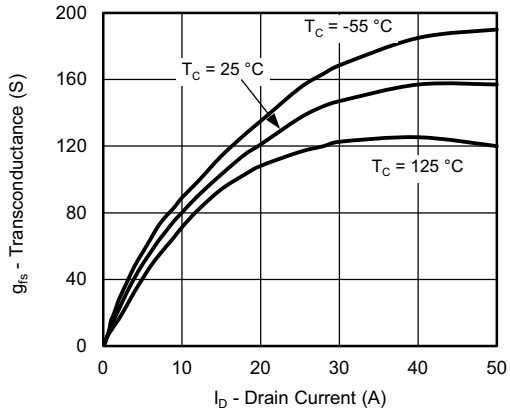

Transconductance

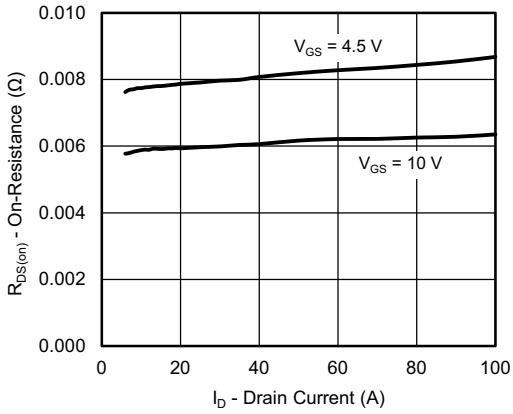

On-Resistance vs. Drain Current

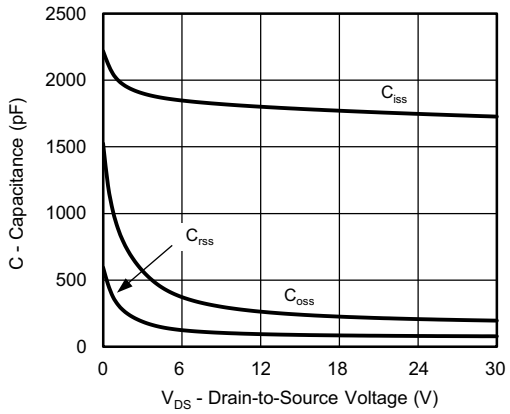

Capacitance

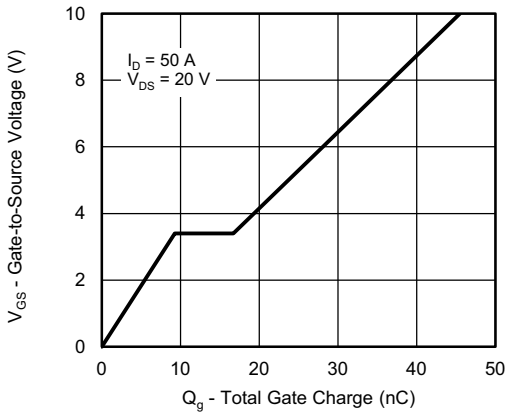

Gate Charge

TYPICAL CHARACTERISTICS (T_A = 25 °C, unless otherwise noted)

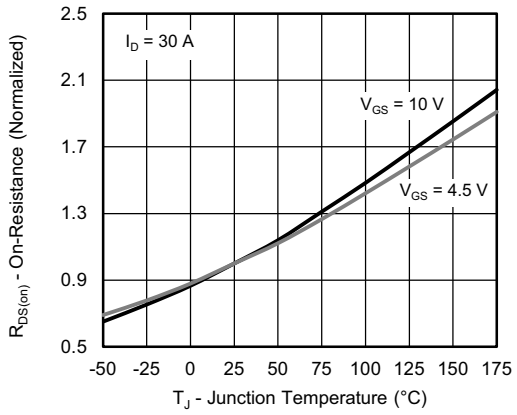

On-Resistance vs. Junction Temperature

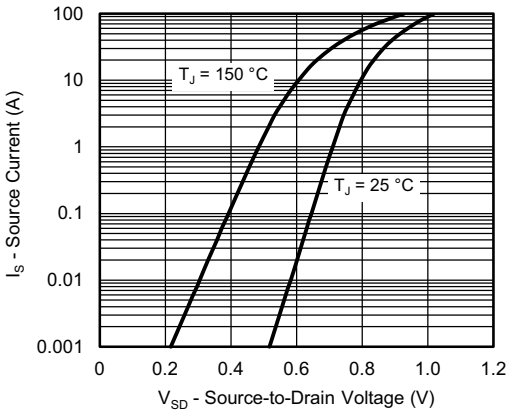

Source Drain Diode Forward Voltage

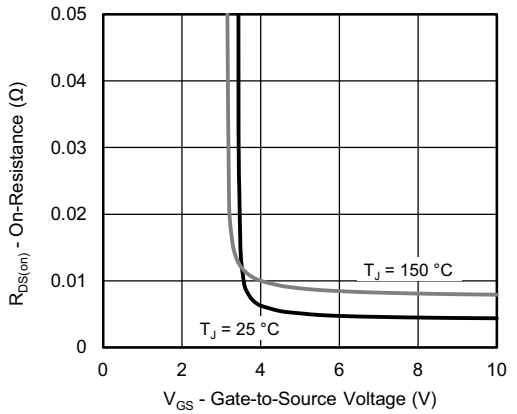

On-Resistance vs. Gate-to-Source Voltage

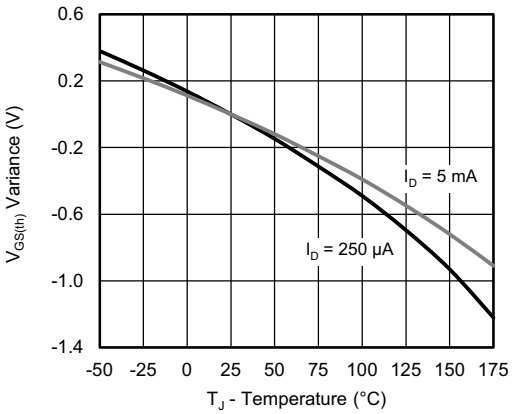

Threshold Voltage

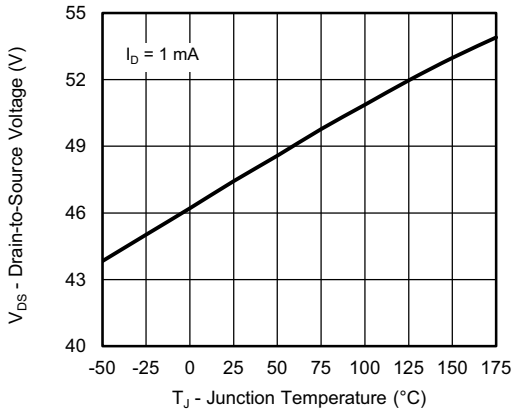

Drain Source Breakdown vs. Junction Temperature

THERMAL RATINGS (T_A = 25 °C, unless otherwise noted)

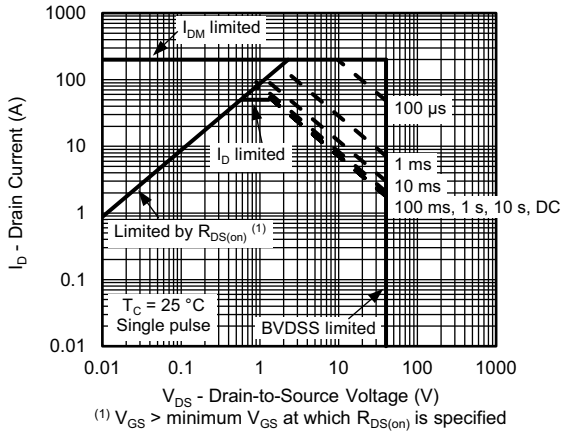

Safe Operating Area

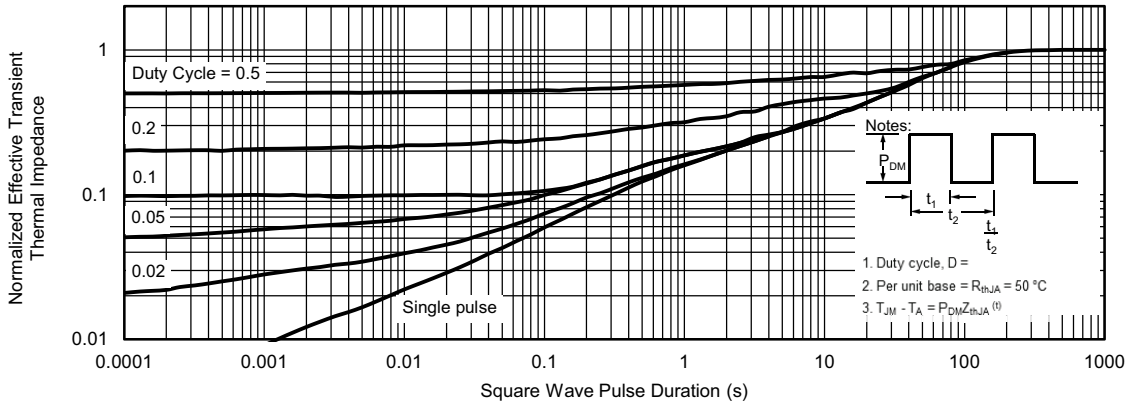

Normalized Thermal Transient Impedance, Junction-to-Ambient

THERMAL RATINGS (T_A = 25 °C, unless otherwise noted)

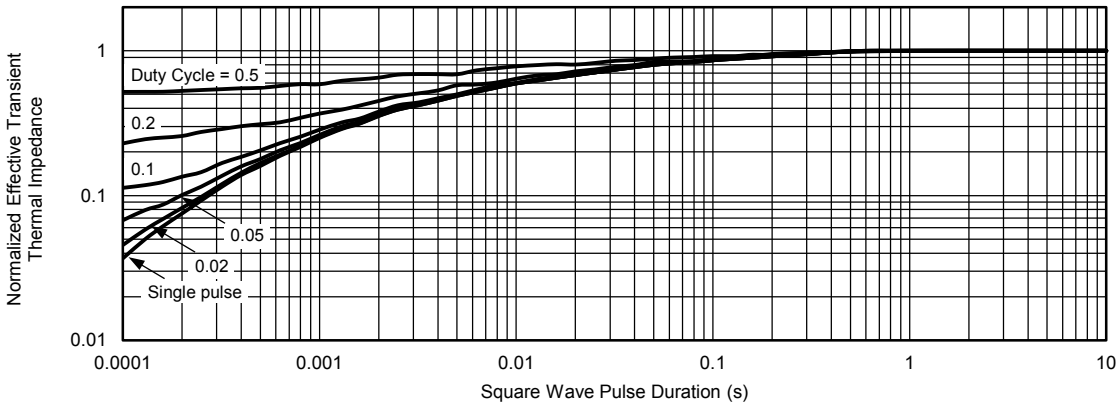

Normalized Thermal Transient Impedance, Junction-to-Case

Note

- The characteristics shown in the two graphs
  - Normalized Transient Thermal Impedance Junction to Ambient (25 °C)
  - Normalized Transient Thermal Impedance Junction to Case (25 °C)

  are given for general guidelines only to enable the user to get a “ball park” indication of part capabilities. The data are extracted from single pulse transient thermal impedance characteristics which are developed from empirical measurements. The latter is valid for the part mounted on printed circuit board - FR4, size 1" x 1" x 0.062", double sided with 2 oz. copper, 100 % on both sides. The part capabilities can widely vary depending on actual application parameters and operating conditions.

TO-220AB

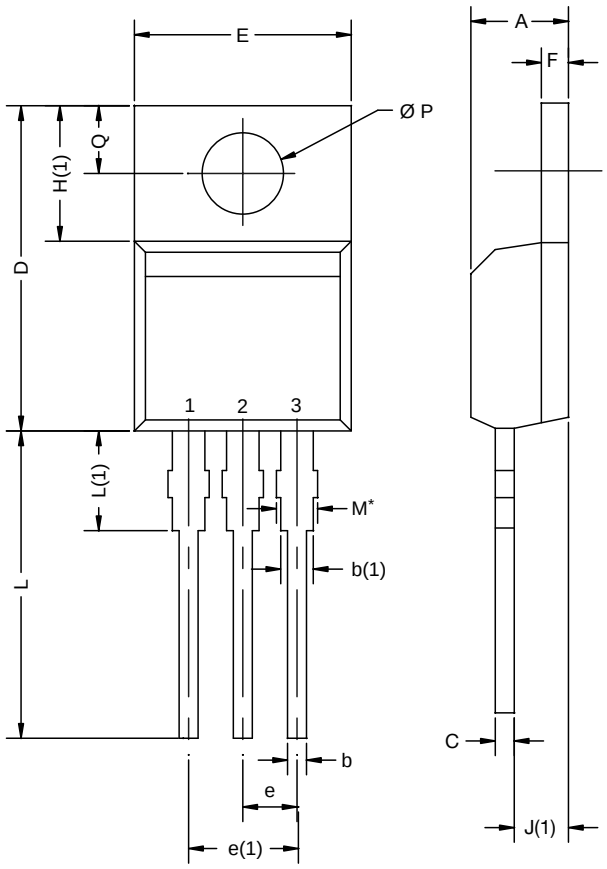

DIM.	MILLIMETERS		INCHES	
	MIN.	MAX.	MIN.	MAX.
A	4.25	4.65	0.167	0.183
b	0.69	1.01	0.027	0.040
b(1)	1.20	1.73	0.047	0.068
c	0.36	0.61	0.014	0.024
D	14.85	15.49	0.585	0.610
E	10.04	10.51	0.395	0.414
e	2.41	2.67	0.095	0.105
e(1)	4.88	5.28	0.192	0.208
F	1.14	1.40	0.045	0.055
H(1)	6.09	6.48	0.240	0.255
J(1)	2.41	2.92	0.095	0.115
L	13.35	14.02	0.526	0.552
L(1)	3.32	3.82	0.131	0.150
Ø P	3.54	3.94	0.139	0.155
Q	2.60	3.00	0.102	0.118
ECN: X12-0208-Rev. N, 08-Oct-12 DWG: 5471				

Notes

* M = 1.32 mm to 1.62 mm (dimension including protrusion) Heatsink hole for HVM

TO-263AB

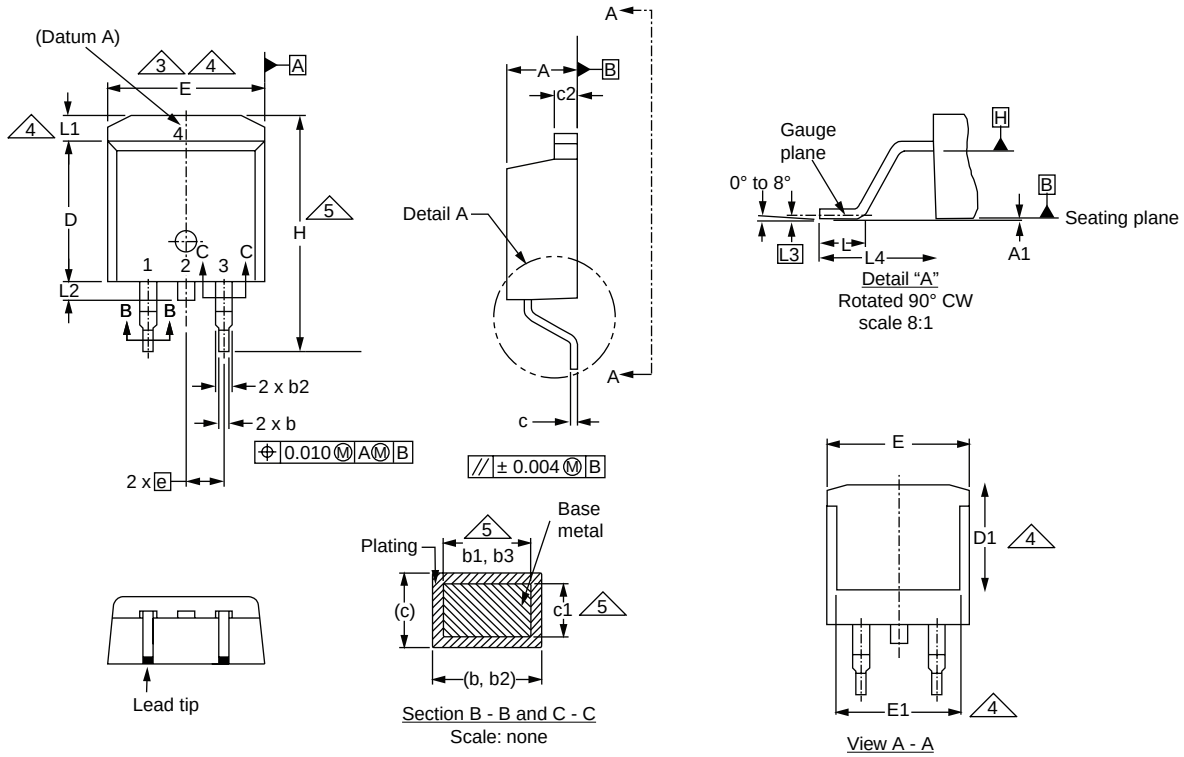

	MILLIMETERS		INCHES	
DIM.	MIN.	MAX.	MIN.	MAX.
A	4.06	4.83	0.160	0.190
A1	0.00	0.25	0.000	0.010
b	0.51	0.99	0.020	0.039
b1	0.51	0.89	0.020	0.035
b2	1.14	1.78	0.045	0.070
b3	1.14	1.73	0.045	0.068
c	0.38	0.74	0.015	0.029
c1	0.38	0.58	0.015	0.023
c2	1.14	1.65	0.045	0.065
D	8.38	9.65	0.330	0.380

	MILLIMETERS		INCHES	
DIM.	MIN.	MAX.	MIN.	MAX.
D1	6.86	-	0.270	-
E	9.65	10.67	0.380	0.420
E1	6.22	-	0.245	-
e	2.54 BSC		0.100 BSC	
H	14.61	15.88	0.575	0.625
L	1.78	2.79	0.070	0.110
L1	-	1.65	-	0.066
L2	-	1.78	-	0.070
L3	0.25 BSC		0.010 BSC	
L4	4.78	5.28	0.188	0.208

ECN: S-82110-Rev. A, 15-Sep-08
DWG: 5970

Notes

1. Dimensioning and tolerancing per ASME Y14.5M-1994.
2. Dimensions are shown in millimeters (inches).
3. Dimension D and E do not include mold flash. Mold flash shall not exceed 0.127 mm (0.005") per side. These dimensions are measured at the outmost extremes of the plastic body at datum A.
4. Thermal PAD contour optional within dimension E, L1, D1 and E1.
5. Dimension b1 and c1 apply to base metal only.
6. Datum A and B to be determined at datum plane H.
7. Outline conforms to JEDEC outline to TO-263AB.

RECOMMENDED MINIMUM PADS FOR D²PAK: 3-Lead

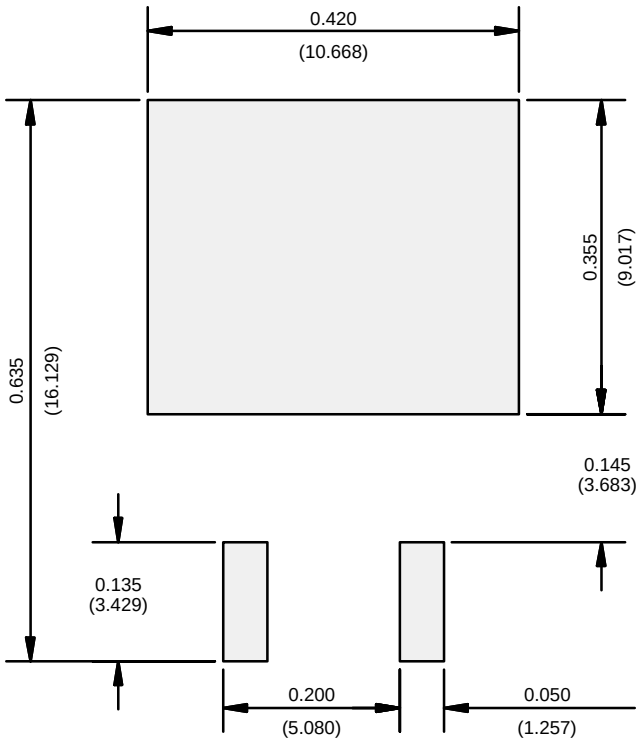

Recommended Minimum Pads
Dimensions in Inches/(mm)

Disclaimer

All products due to improve reliability, function or design or for other reasons, product specifications and data are subject to change without notice.

Taiwan VBsemi Electronics Co., Ltd., branches, agents, employees, and all persons acting on its or their representatives (collectively, the "Taiwan VBsemi"), assumes no responsibility for any errors, inaccuracies or incomplete data contained in the table or any other any disclosure of any information related to the product.(www.VBsemi.com)

Taiwan VBsemi makes no guarantee, representation or warranty on the product for any particular purpose of any goods or continuous production. To the maximum extent permitted by applicable law on Taiwan VBsemi relinquished: (1) any application and all liability arising out of or use of any products; (2) any and all liability, including but not limited to special, consequential damages or incidental ; (3) any and all implied warranties, including a particular purpose, non-infringement and merchantability guarantee.

Statement on certain types of applications are based on knowledge of the product is often used in a typical application of the general product VBsemi Taiwan demand that the Taiwan VBsemi of. Statement on whether the product is suitable for a particular application is non-binding. It is the customer's responsibility to verify specific product features in the products described in the specification is appropriate for use in a particular application. Parameter data sheets and technical specifications can be provided may vary depending on the application and performance over time. All operating parameters, including typical parameters must be made by customer's technical experts validated for each customer application. Product specifications do not expand or modify Taiwan VBsemi purchasing terms and conditions, including but not limited to warranty herein.

Unless expressly stated in writing, Taiwan VBsemi products are not intended for use in medical, life saving, or life sustaining applications or any other application. Wherein VBsemi product failure could lead to personal injury or death, use or sale of products used in Taiwan VBsemi such applications using client did not express their own risk. Contact your authorized Taiwan VBsemi people who are related to product design applications and other terms and conditions in writing.

The information provided in this document and the company's products without a license, express or implied, by estoppel or otherwise, to any intellectual property rights granted to the VBsemi act or document. Product names and trademarks referred to herein are trademarks of their respective representatives will be all.

Material Category Policy

Taiwan VBsemi Electronics Co., Ltd., hereby certify that all of the products are determined to be RoHS compliant and meets the definition of restrictions under Directive of the European Parliament 2011/65 / EU, 2011 Nian. 6. 8 Ri Yue restrict the use of certain hazardous substances in electrical and electronic equipment (EEE) - modification, unless otherwise specified as inconsistent.(www.VBsemi.com)

Please note that some documents may still refer to Taiwan VBsemi RoHS Directive 2002/95 / EC. We confirm that all products identified as consistent with the Directive 2002/95 / EC European Directive 2011/65 /.

Taiwan VBsemi Electronics Co., Ltd. hereby certify that all of its products comply identified as halogen-free halogen-free standards required by the JEDEC JS709A. Please note that some Taiwanese VBsemi documents still refer to the definition of IEC 61249-2-21, and we are sure that all products conform to confirm compliance with IEC 61249-2-21 standard level JS709A.